Main Catalogue

Edition 01/2023

Design the future
of energy

BENDER

Bender GmbH & Co. KG
Londorfer Str. 65

D-35305 Grünberg
P.O.Box 1161
D-35301 Grünberg
Tel. +49 6401 807-0
Fax +49 6401 807-259

E mail: info@bender.de
Internet: www.bender.de

Table of content

Device overview insulation monitoring devices ISOMETER®

					
		ISOMETER® iso685-…	ISOMETER® iso685-…-B	ISOMETER® iso685-…-P	ISOMETER® isoNAV685-D
Catalogue page		12	16	20	26
Special applications		–	–	–	Quick response to combined resistance and offset voltage measurement
Circuits	Control circuits	✓	✓	✓	✓
	Auxiliary circuits	✓	✓	✓	✓
	Main circuits	✓	✓	✓	✓
Voltage system	3(N)AC	✓	✓	✓	✓
	AC	✓	✓	✓	✓
	AC/DC	✓	✓	✓	✓
	DC	✓	✓	✓	–
Nominal system voltage U_n		AC, 3(N)AC 0…690 V, DC 0…1000 V	AC, 3(N)AC 0…690 V, DC 0…1000 V	AC, 3(N)AC 0…690 V, DC 0…1000 V	AC, 3(N)AC 0…690 V (60 Hz)
Tolerance of U_n		+ 15 %	+ 15 %	+ 15 %	+ 15 %
System leakage capacitance C_e µF		≤ 1000	≤ 1000	≤ 1000	≤ 1000
Response value R_{an} kΩ		1…10000	1…10000	1…10000	1…10000
Coupled systems		–	✓	✓	–
Locating current injector for insulation fault location		–	–	✓	–
Installation	DIN rail	✓	✓	✓	✓
	Screw mounting	✓	✓	✓	✓
	Panel mounting/ wall fastening	✓	✓	✓	–
Interfaces	Web server	✓	✓	✓	✓
	Modbus	TCP/RTU	TCP/RTU	TCP/RTU	TCP
	BCOM	✓	✓	✓	✓
	BS	✓	✓	✓	✓
	BMS	–	–	–	–
	isoData	✓	✓	✓	–
Product details (Products on www.bender.de/en)					

	Type	C. p.	Suitable system components			
	FP200	49	✓	✓	✓	–
Coupling devices	AGH150W-4	363	✓	✓	–	–
	AGH204S-4	365	✓	✓	–	–
	AGH520S	366	✓	✓	–	–
	AGH675S-7	367	–	–	–	–
	AGH676S-4	369	✓	✓	–	–

				
ISOMETER® isoNAV685-D-B	**ISOMETER® isoHR685W-…-B**	**ISOMETER® isoRW685W-D**	**ISOMETER® isoRW685W-D-B**	**ISOMETER® IRDH275BM-7**
31	**36**	**41**	**45**	**51**
De-energised loads/ frequency converters	Installations with a high level of insulation	Railway	Railway	AC, DC or AC/DC medium voltage systems
✓	✓	✓	✓	–
✓	✓	✓	✓	–
✓	✓	✓	✓	✓
✓	✓	✓	✓	✓
✓	✓	✓	✓	–
✓	✓	✓	✓	✓
✓	✓	✓	✓	✓
offline (AC 0…690 V) (DC 0…1000 V)	AC 0…1000 V, 3AC 0…690 V, DC 0…1300 V	AC, 3(N)AC 0…690 V, DC 0…1000 V	AC, 3(N)AC 0…690 V, DC 0…1000 V	AC, 3(N)AC, DC 0…15,5 kV (absolute)
–	+ 15 %	+ 15 %	+ 15 %	+ 15 %
≤ 1000	≤ 1000	≤ 1000	≤ 1000	≤ 5
10…1000	1…3000000	1…10000	1…10000	100…10000
–	✓	–	–	–
–	–	–	–	–
✓	✓	✓	✓	✓
✓	✓	✓	✓	✓
–	✓	–	–	–
✓	✓	✓	✓	–
TCP	TCP/RTU	TCP/RTU	TCP/RTU	–
✓	✓	✓	✓	–
✓	✓	✓	✓	–
–	–	–	–	✓
–	✓	✓	✓	–

Suitable system components

–	✓	–	–	–
–	✓	✓	✓	–
–	✓	✓	✓	–
–	✓	✓	✓	–
–	–	–	–	✓
–	✓	✓	✓	–

Device overview insulation monitoring devices ISOMETER®

		 ISOMETER® iso415R	 ISOMETER® IR420-D4	 ISOMETER® IR425	 ISOMETER® iso1685DP
Catalogue page		55	58	61	64
Special applications		–	–	–	–
Circuits	Control circuits	✓	✓	✓	–
	Auxiliary circuits	✓	✓	✓	–
	Main circuits	–	–	–	✓
Voltage system	3(N)AC	–	–	–	–
	AC	✓	✓	✓	✓
	AC/DC	✓	–	✓	✓
	DC	✓	–	✓	✓
Nominal system voltage U_n		Depending on variant	AC 0…250 V	AC/DC 0… 300 V	AC 0…1000 V, DC 0…1500 V
Tolerance of U_n		-30 %…+15 %	+ 20 %	+ 20 %	+10 %, +5%
System leakage capacitance C_e µF		≤ 25	≤ 20	≤ 20	≤ 2000
Response value R_{an} kΩ		5…1000	1…200	1…200	0.2…1000
Coupled systems		–	–	–	✓
Locating current injector for insulation fault location		–	–	–	–
Installation	DIN rail	✓	✓	✓	–
	Screw mounting	✓	✓	✓	✓
	Panel mounting/ wall fastening	–	–	–	–
Interfaces	Web server	–	–	–	–
	Modbus	RTU	–	–	RTU
	BCOM	–	–	–	–
	BS	–	–	–	–
	BMS	–	–	–	✓
	isoData	–	–	–	–
Product details (Products on www.bender.de/en)					

	Type	C. p.	Suitable system components			
	FP200	49	–	–	–	–
Coupling devices	AGH150W-4	363	–	–	–	–
	AGH204S-4	365	–	–	–	–
	AGH520S	366	–	–	–	–
	AGH675S-7	367	–	–	–	–
	AGH676S-4	369	–	–	–	–

					
ISOMETER® isoHV1685D	**ISOMETER® isoLR1685DP**	**ISOMETER® isoHR1685DW**	**ISOMETER® IR1575**	**ISOMETER® IR427**	**ISOMETER® isoMED427x-(PT)**
64	**64**	**68**	**71**	**74**	**78**
–	Induction furnace	insulated elevating work platforms	–	Medical locations	Medical locations
–	–	–	–	–	✓
–	–	–	–	–	–
✓	✓	✓	✓	✓	✓
–	–	–	✓	–	–
✓	✓	✓	✓	✓	✓
✓	✓	✓	✓	–	–
✓	✓	✓	✓	–	–
AC 0…2000 V, DC 0…3000 V	AC 0…690 V, DC 0…690 V	AC 0…1000 V, DC 0…1500 V	AC, 3(N) AC 0…400 V DC 0…400 V	AC 70…330 V	AC 70…230 V
+10 %, +5%	+10 % +5%	+10 %, +5%	+ 20 %	+ 15 %	+ 15 %
≤ 2000	≤ 2000	≤ 1	≤ 60	≤ 5	≤ 5
0.2…1000	0,02…100	100…1000	2…1000	50…500	50…500
✓	✓	■	–	–	–
–	–	–	–	–	✓
–	–	–	–	✓	✓
✓	✓	✓	–	✓	✓
–	–	–	✓	–	–
–	–	–	–	–	–
RTU	RTU	RTU	–	–	–
–	–	–	–	–	–
–	–	–	–	–	–
✓	✓	✓	✓	–	✓
–	–	–	–	–	–

Suitable system components

–	–	–	–	–	–
–	–	–	–	–	–
–	–	–	–	–	–
–	–	–	–	–	–
–	–	–	–	–	–
–	–	–	–	–	–

Device overview insulation monitoring devices ISOMETER®

					
		ISOMETER® isoLR275	ISOMETER® isoPV	ISOMETER® isoPV425	ISOMETER® isoPV1685RTU
Catalogue page		81	84	88	92
Special applications		Installations with a low level of insulation	Photovoltaic	Photovoltaic	Photovoltaic
Circuits	Control circuits	–	–	–	–
	Auxiliary circuits	–	–	–	–
	Main circuits	✓	✓	✓	✓
Voltage system	3(N)AC	✓	✓	✓	✓
	AC	✓	✓	✓	✓
	AC/DC	✓	✓	✓	✓
	DC	✓	✓	✓	✓
Nominal system voltage U_n		via AGH-LR 3(N)AC 0…690 V DC 0…1000 V	via AGH-PV 3(N)AC 0…793 V DC 0…1000 V	DC 0…1000 V, AC 0…690 V , 15…460 Hz	AC 0…1000 V DC 0…1500 V
Tolerance of U_n		+ 15 % + 10 %	+ 10 %	+ 15 %	+ 6 %
System leakage capacitance C_e µF		≤ 500	≤ 2000	≤ 500	≤ 2000
Response value R_{an} kΩ		0.2…100	0.2…100	1…990	0.2…990
Coupled systems		–	✓	–	–
Locating current injector for insulation fault location		–	–	–	–
Installation	DIN rail	✓	✓	✓	–
	Screw mounting	✓	✓	✓	✓
	Panel mounting/ wall fastening	–	–	–	–
Interfaces	Web server	–	–	–	–
	Modbus	–	–	RTU	RTU
	BCOM	–	–	–	–
	BS	–	–	–	–
	BMS	✓	✓	✓	✓
	isoData	–	–	✓	–
Product details (Products on www.bender.de/en)					

	Type	C. p.	Suitable system components			
	FP200	49	–	–	–	–
Coupling devices	AGH150W-4	363	–	–	–	–
	AGH204S-4	365	–	–	–	–
	AGH520S	366	–	–	–	–
	AGH675S-7	367	–	–	–	–
	AGH676S-4	369	–	–	–	–

					
ISOMETER® isoPV1685P	**ISOMETER® isoPV1685DP**	**ISOMETER® IR420-D6**	**ISOMETER® IR423**	**ISOMETER® IR123**	**ISOMETER® isoGEN423**
92	**95**	**98**	**101**	**104**	**107**
Photovoltaic	Photovoltaic	Disconnected loads	Mobile generators	Mobile generators	Generators acc. to standard DIN VDE 0100-551
–	–	–	–	–	–
–	–	–	–	–	–
✓	✓	✓	✓	✓	✓
–	✓	✓	–	–	✓
–	✓	✓	✓	✓	✓
–	✓	–	–	–	✓
✓	✓	✓	–	–	✓
DC 0…1500 V	AC 0…1000 V DC 0…1500 V	offline (AC 0…400 V)	AC 0…250 V	AC 100…250 V	3(N)AC, AC 0…400 V, DC 0…400 V
+ 6 %	+10 %, +5%	–	+ 20 %	+ 20 %	+25 %
≤ 2000	≤ 4000	≤ 10	≤ 5	≤ 1	≤ 5
0.2…990	0.2…200	100…10000	1…200	46/23	5…200
–	✓	–	–	–	–
✓	✓	–	–	–	–
–	–	✓	✓	–	✓
✓	✓	✓	✓	✓	✓
–	–	–	–	–	–
–	–	–	–	–	–
–	RTU	–	–	–	RTU
–	–	–	–	–	–
–	–	–	–	–	–
✓	✓	–	–	–	✓
–	–	–	–	–	✓

Suitable system components

–	–	–	–	–	–
–	–	–	–	–	–
–	–	–	–	–	–
–	–	✓	–	–	–
–	–	–	–	–	–
–	–	✓	–	–	–

Device overview insulation monitoring devices ISOMETER®

					
		ISOMETER® isoRW425	ISOMETER® isoUG425	ISOMETER® isoES425	ISOMETER® isoHV425
Catalogue page		110	113	116	119
Special applications		Railway	Unearthed DC systems	Energy storage VDE-AR-E 2510-2	–
Circuits	Control circuits	–	–	–	–
	Auxiliary circuits	–	–	–	–
	Main circuits	✓	✓	✓	✓
Voltage system	3(N)AC	✓	–	–	✓
	AC	✓	–	✓	✓
	AC/DC	✓	–	✓	✓
	DC	✓	✓	✓	✓
Nominal system voltage U_n		AC/DC 0…400 V	DC 12…120 V	3 (N)AC, AC 0…400 V, DC 0…400 V	with AGH422 AC 0…1000 V, DC 0…1000 V
Tolerance of U_n		+ 25 %	+20 %	+25 %	+10 %
System leakage capacitance C_e µF		≤ 300	≤ 50	≤ 100	≤ 150
Response value R_{an} kΩ		1…990	2…100	2…990	11…500
Coupled systems		–	–	–	–
Locating current injector for insulation fault location		–	–	–	–
Installation	DIN rail	✓	✓	✓	✓
	Screw mounting	✓	✓	✓	✓
	Panel mounting/ wall fastening	–	–	–	–
Interfaces	Web server	–	–	–	–
	Modbus	RTU	RTU	–	RTU
	BCOM	–	–	–	–
	BS	–	–	–	–
	BMS	✓	✓	✓	✓
	isoData	✓	✓	✓	✓
Product details (Products on www.bender.de/en)					

	Type	C. p.	Suitable system components			
	FP200	49	–	–	–	–
Coupling devices	AGH150W-4	363	–	–	–	–
	AGH204S-4	365	–	–	–	–
	AGH520S	366	–	–	–	–
	AGH675S-7	367	–	–	–	–
	AGH676S-4	369	–	–	–	–

			
ISOMETER® IR155	**ISOMETER® isoEV425**	**ISOMETER® isoCHA425**	**ISOMETER® isoCHA425HV**
123	**127**	**131**	**134**
Electric mobility	Electric mobility	Electric mobility	Electric mobility
–	–	–	–
–	–	–	–
✓	✓	✓	✓
–	–	–	–
–	–	–	–
–	–	–	–
✓	✓	✓	✓
DC 0…1000 V	DC 0…1000 V AC 0…690 V, 15…460 Hz	DC 0…400 V	DC 0…1000 V with AGH420-1
+ 0 %	+ 10 % + 15 %	+25 %	+10 %
≤ 1	≤ 5	≤ 5	≤ 5
100…10000	10…990	230 48	600 120
–	–	–	–
–	–	–	–
–	✓	✓	✓
✓	✓	–	–
–	–	–	–
–	–	–	–
–	RTU	RTU	RTU
–	–	–	–
–	–	–	–
–	✓	✓	✓
–	✓	✓	✓

Suitable system components

–	–	–	–
–	–	–	–
–	–	–	–
–	–	–	–
–	–	–	–
–	–	–	–

ISOMETER® iso685-…

Insulation monitoring device for unearthed AC, AC/DC and DC systems (IT systems)

AC/DC

Typical applications

- AC, DC or AC/DC main circuits
- AC/DC main circuits with directly connected DC components, such as rectifiers, converters, variable-speed drives
- UPS systems, battery systems
- Heaters with phase control
- Systems including switched-mode power supplies
- IT systems with high leakage capacitances

Approvals

Device features

- ISOMETER® for IT AC systems with galvanically connected rectifiers or inverters and for IT DC systems (IT = unearthed systems)
- Automatic adaptation to the existing system leakage capacitance
- Combination of ***AMP***^{Plus} and other profile-specific measurement methods
- Two separately adjustable response value ranges of 1 kΩ…10 MΩ
- High-resolution graphical LC display
- Connection monitoring (monitoring of the measuring lines)
- Automatic device self test
- Graphical representation of the insulation resistance over time (isoGraph)
- History memory with real-time clock (buffer for three days) for storing 1023 alarm messages with date and time
- Current or voltage output 0(4)…20 mA, 0…400 µA, 0…10 V, 2…10 V (galvanically separated), which is analogous to the measured insulation value of the system
- Freely programmable digital inputs and outputs
- Remote setting via the Internet or Intranet (Webserver/Option: COMTRAXX® gateway)
- Worldwide remote diagnosis via the Internet (made available by Bender Service only)
- RS-485/BS (Bender sensor bus) for data exchange with other Bender devices
- BCOM, Modbus TCP/RTU and web server
- Voltage expandable via coupling devices

Device variants

- **iso685-D**
  The device version iso685-D features a high-resolution graphic LC display and control elements for direct operating of the device functions.
- **iso685-S**
  The device version iso685-S neither features a display nor a control unit. It can only be used in combination with FP200 and is indirectly operated via this front panel.
- **Option "W"**
  Device variants with Option "W" are available for extreme climatic and mechanical conditions.

Standards

The ISOMETER® has been developed in compliance with the following standards::

- DIN EN 61557-8 (VDE 0413-8)
- IEC 61557-8

Further information

For further information refer to our product range on www.bender.de.

Ordering information

Type		Nominal system voltage range U_n	Supply voltage U_s	Display	Option W	Art. No.
iso685-D		AC 0…690 V; 0.1…460 Hz DC 0…1000 V	AC 24…240 V; 50…400 Hz DC 24…240 V	integrated	–	B91067010
iso685W-D					-40…+70 °C, 3K23, 3M12	B91067010W
iso685-S + FP200				detached	–	B91067210
iso685W-S + FP200W					-40…+70 °C, 3K23, 3M12	B91067210W

Accessories

Description	Art. No.
A set of screw terminals[1]	B91067901
A set of push-wire terminals	B91067902
Enclosure accessories (terminal cover, 2 mounting clips) [1]	B91067903

[1] included in the scope of delivery

Suitable system components

Description	Type	Art. No.	Page
Device version without display	iso685-S	B91067110	–
	iso685W-S	B91067110W	–
Display for front panel mounting	FP200	B91067904	**49**
	FP200W	B91067904W	**49**
Coupling devices	AGH150W-4	B98018006	**363**
	AGH204S-4	B914013	**365**
	AGH520S	B913033	**366**
	AGH676S-4	B913055	**369**

Suitable measuring instruments on request!

Technical data

Insulation coordination according to IEC 60664-1/IEC 60664-3

Definitions:	
Measuring circuit (IC1)	(L1/+, L2, L3/-)
Supply circuit (IC2)	A1, A2
Output circuit 1 (IC3)	11, 12, 14
Output circuit 2 (IC4)	21, 22, 24
Control circuit (IC5)	(E, KE), (X1, ETH, X3, X4)
Rated voltage	1000 V
Overvoltage category	III
Rated impulse voltage:	
IC1/(IC2-5)	8 kV
IC2/(IC3-5)	4 kV
IC3/(IC4-5)	4 kV
IC4/IC5	4 kV
Rated insulation voltage:	
IC1/(IC2-5)	1000 V
IC2/(IC3-5)	250 V
IC3/(IC4-5)	250 V
IC4/IC5	250 V
Pollution degree for accessible parts on the outside of the device housing (U_n < 690 V)	3
Pollution degree for accessible parts on the outside of the device housing (U_n >690 < 1000 V)	2
Protective separation (reinforced insulation) between:	
IC1/(IC2-5)	Overvoltage category III, 1000 V
IC2/(IC3-5)	Overvoltage category III, 300 V
IC3/(IC4-5)	Overvoltage categoryIII, 300 V
IC4/IC5	Overvoltage category III, 300 V
Voltage test (routine test) according to IEC 61010-1:	
IC2/(IC3-5)	AC 2,2 kV
IC3/(IC4-5)	AC 2,2 kV
IC4/IC5	AC 2,2 kV

Supply voltage

Supply via A1/+, A2/-:	
Supply voltage range U_s	AC/DC 24…240 V
Tolerance of U_s	-30…+15%
Maximum permissible input current of U_s	650 mA
Frequency range of U_s	DC, 50…400 Hz [1]
Tolerance of the frequency range of U_s	-5…+15 %
Power consumption, typically DC	≤ 12 W
Power consumption, typically 50/60 Hz	≤ 12 W/21 VA
Power consumption, typically 400 Hz	≤ 12 W/45 VA
Supply via X1:	
Supply voltage U_s	DC 24 V
Tolerance of U_s	DC -20…+25 %

IT system being monitored

Nominal system voltage range U_n	AC 0…690 V DC 0…1000 V AC/DC 0…600 V (for UL applications)
Tolerance of U_n	AC/DC +15 %
Frequency range of U_n	DC, 0.1…460 Hz
Max. AC voltage $U_{\sim}$ in the frequency range f_n = 0.1…4 Hz	$U_{\sim\,max} = 50\ V/Hz^2 * (1 + f_n^2)$

Response values

Response value R_{an1} (alarm 1)	1 kΩ…10 MΩ
Response value R_{an2} (alarm 2)	1 kΩ…10 MΩ
Relative uncertainty (acc. to IEC 61557-8)	profile dependent, ±15 %, at least ±1 kΩ
Hysteresis	25 %, at least 1 kΩ

Time response

Response time t_{an} at R_F = 0.5 x R_{an} (R_{an} = 10 kΩ) and C_e = 1 µF according to IEC 61557-8	profile dependent, typ. 4 s (see diagrams in manual)
Response time DC alarm at C_e = 1 µF	profile dependent, typ. 2 s (see diagram in manual)
Start-up delay $T_{start\text{-}up}$	0…600 s

Measuring circuit

Measuring voltage U_m	profile dependent, ±10 V, ±50 V (see profile overview)
Measuring current I_m	≤ 403 µA
Internal resistance R_i, Z_i	≥ 124 kΩ
Permissible extraneous DC voltage U_{fg}	≤ 1200 V
Permissible system leakage capacitance C_e	profile dependent, 0…1000 µF

Measuring ranges

Measuring range f_n	0,1…460 Hz
Tolerance measurement of f_n	±1 % ±0.1 Hz
Voltage range measurement of f_n	AC 25…690 V
Measuring range U_n	AC 25…690 V DC 25…1000 V
Voltage range measurement of U_n	AC/DC > 10 V
Tolerance measurement of U_n	±5 % ±5 V
Measuring range C_e	0…1000 µF
Tolerance measurement of C_e	±10 % ±10 µF
Frequency range measurement of C_e	DC, 30…460 Hz
Min. insulation resistance measurement of C_e	depending on the profile and coupling mode, typ. > 10 kΩ

Display

Indication	graphic display 127 x 127 pixels, 40 x 40 mm [2]
Display range measured value	0.1 kΩ…20 MΩ
Operating uncertainty (according to IEC 61557-8)	±15 %, at least ±1 kΩ

LEDs

ON (operation LED)	green
SERVICE	yellow
ALARM 1	yellow
ALARM 2	yellow

In-/Outputs (X1-Interface)

Cable length X1 (unshielded cable)	≤ 10 m
Cable length X1 (shielded cable, shield connected to earth (PE) on one end, recommended: J-Y(St)Y min. 2x0,8)	≤ 100 m
Total max. supply output current for each output (device supplied by X1.+/X1.GND)	max. 1 A
Total max. supply output current on X1 (device supplied by A1+/A2-)	max. 200 mA
Total max. supply output current on X1 (device supplied by A1+/A2- between 16,8 V and 40 V)	I_{LmaxX1} = 10 mA + 7 mA/V * U_s [3] (negative values are not allowed for I_{LmaxX1})

Digital Inputs (I1, I2, I3)

Number	3
Operating mode, adjustable	active high, active low
Functions	off, test, reset, deactivate device, start initial measurement
Voltage	Low DC -3…5 V, High DC 11…32 V
Tolerance Voltage	±10 %

Digital Outputs (Q1, Q2)

Number	2
Operating mode, adjustable	active, passive
Functions	off, Ins. alarm 1, Ins. alarm 2, connection fault, DC- alarm [4], DC+ alarm [4], symmetrical alarm, device fault, common alarm, measurement complete, device inactive, DC offset alarm
Voltage	passive DC 0…32 V, active DC 0/19.2…32 V

Analogue Output (M+)

Number	1
Operating mode	linear, midscale point 28 kΩ/120 kΩ
Functions	insulation value, DC offset
Current	0…20 mA (< 600 Ω), 4…20 mA (< 600 Ω), 0…400 µA (< 4 kΩ)
Voltage	0…10 V (> 1 kΩ), 2…10 V (> 1 kΩ)
Tolerance related to the current/voltage final value	±20 %

Interfaces

Field bus:	
Interface/protocol	web server/Modbus TCP/BCOM
Data rate	10/100 Mbit/s, autodetect
Max. amount Modbus requests	< 100/s
Cable length	≤ 100 m
Connection	RJ45
IP address	DHCP/manual 192.168.0.5
Network mask	255.255.255.0
BCOM address	system-1-0
Function	communication interface
Sensor bus:	
Interface/protocol	RS-485/BS/Modbus RTU
Data rate	9.6 kBaud/s
Cable length	≤ 1200 m
Cable: twisted pair, one end of shield connected to PE	recommended: J-Y(St)Y min. 2x0.8
Connection	terminals X1.A, X1.B
Terminating resistor at the beginning and at the end of the transmission path	120 Ω, can be connected internally
Device address, BS bus	1…90

Switching elements

Number of switching elements	2 changeover contacts
Operating mode	N/C operation/N/O operation
Contact 11-12-14/21-22-24	off, Ins. alarm 1, Ins. alarm 2, connection fault, DC- alarm [4], DC+ alarm [4], symmetrical alarm, device fault, common alarm, measurement complete, device inactive, DC offset alarm
Electrical endurance under rated operating conditions, number of cycles	10.000

Contact data acc. to IEC 60947-5-1:

Utilisation category	AC-13	AC-14	DC-12	DC-12	DC-12	DC-12
Rated operational voltage	230 V	230 V	24 V	48 V	110 V	220 V
Rated operational current	5 A	3 A	1 A	1 A	0.2 A	0.1 A
Rated insulation voltage ≤ 2000 m NN						250 V
Rated insulation voltage ≤ 3000 m NN						160 V
Minimum contact rating						1 mA at AC/DC ≥ 10 V

Condiciones Ambientales/Compatibilidad electromagnética

CEM	IEC 61326-2-4 [5]
Ambient temperatures:	
Operating temperature	-25…+55 °C
Transport	-40…+85 °C
Long-term storage	-40…+70 °C

Classification of climatic conditions acc. to IEC 60721 (related to temperature and relative humidity)**:**

Stationary use (IEC 60721-3-3)	3K22
Transport (IEC 60721-3-2)	2K11
Long-term storage (IEC 60721-3-1)	1K22
Classification of mechanical conditions acc. to IEC 60721:	
Stationary use (IEC 60721-3-3)	3M11
Transport (IEC 60721-3-2)	2M4
Long-term storage (IEC 60721-3-1)	1M12
Area of application	≤ 3000 m NN

Connection

Connection type	pluggable screw-type terminal or push-wire terminal
Screw-type terminals:	
Nominal current	≤ 10 A
Tightening torque	0.5…0.6 Nm (5…7 lb-in)
Conductor sizes	AWG 24-12
Stripping length	7 mm
rigid/flexible	0.2…2.5 mm²
flexible with ferrules, with/without plastic sleeve	0.25…2.5 mm²
Multiple conductor, rigid	0.2…1 mm²
Multiple conductor, flexible	0.2…1.5 mm²
Multiple conductor, flexible with ferrule without plastic sleeve	0.25…1 mm²
Multiple conductor, flexible with TWIN ferrule with plastic sleeve	0.5…1.5 mm²
Push-wire terminals:	
Nominal current	≤ 10 A
Conductor sizes	AWG 24-12
Stripping length	10 mm
rigid/flexible	0.2…2.5 mm²
flexible with ferrules, with/without plastic sleeve	0.25…2.5 mm²
Multiple conductor, flexible with TWIN ferrule with plastic sleeve	0.5…1.5 mm²
Push-wire terminals X1:	
Nominal current	≤ 8 A
Conductor sizes	AWG 24-16
Stripping length	10 mm
rigid/flexible	0.2…1.5 mm²
flexible with ferrule without plastic sleeve	0.25…1.5 mm²
flexible with TWIN ferrule with plastic sleeve	0.25…0.75 mm²

Other

Operating mode	continuous operation
Mounting (0°)	display oriented, cooling slots must be ventilated vertically [6]
Degree of protection internal components	IP40
Degree of protection terminals	IP20
DIN rail mounting acc. to	IEC 60715
Screw fixing	3 x M4 with mounting clip
Enclosure material	polycarbonate
Flammability class	V-0
ANSI code	64
Dimensions (W x H x D)	108 x 93 x 110 mm
Documentation number	D00022
Weight	< 390 g

Option "W" data different from the standard version

Rated operational current of switching elements	max. 3 A (for UL applications)
Ambient temperatures:	
Operating temperature	-40…+70 °C -40…+65 °C (for UL applications)
Transport	-40…+85 °C
Long-term storage	-40…+70 °C
Classification of climatic conditions acc. to IEC 60721:	
Stationary use (IEC 60721-3-3)	3K23
Classification of mechanical conditions acc. to IEC 60721:	
Stationary use (IEC 60721-3-3)	3M12

1) At a frequency > 200 Hz, the connection of X1 must be insulated. Only permanently installed devices which at least have overvoltage category CAT2 (300V) may be connected.

2) Indication limited outside the temperature range -25…+55 °C.

3) U_s [Volt] = supply voltage ISOMETER®

4) For U_n ≥ 50 V only.

5) This is a class A product. In a domestic environment, this product may cause radio interference. In this case, the user may be required to take corrective actions.

6) Recommendation: Devices mounted at 0 ° (display-oriented, cooling slots must be ventilated vertically). For devices mounted at an angle of 45°, the max. working temperature is reduced by 10 °C. For devices mounted at an angle of 90°, the max. working temperature is reduced by 20 °C.

Dimension diagram (dimensions in mm)

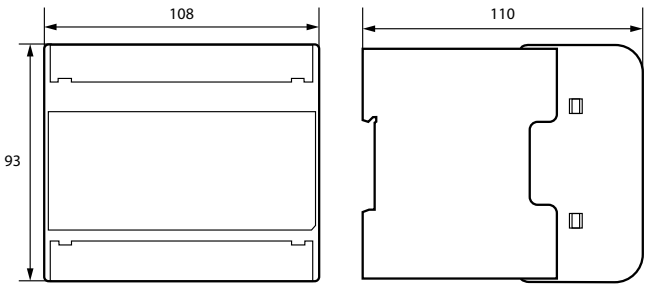

Connection to FP200

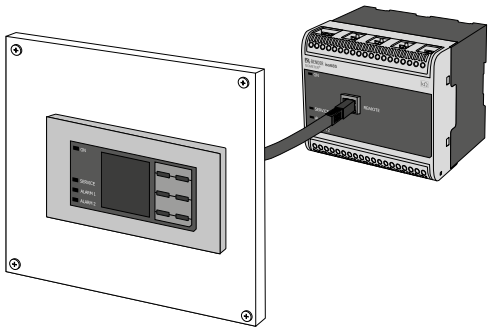

Wiring diagram

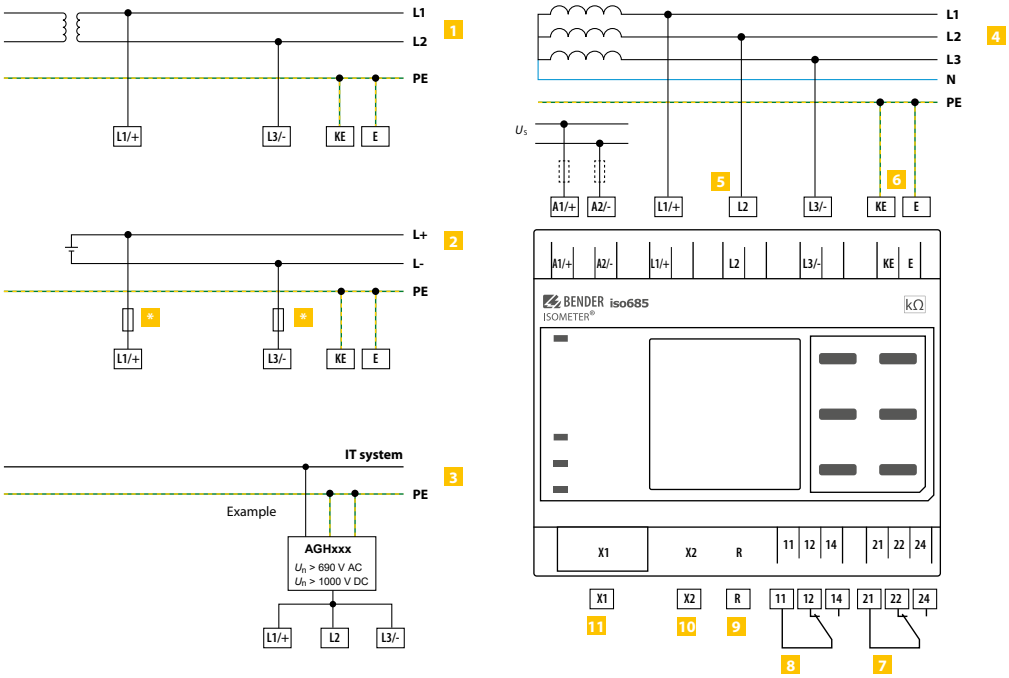

1 Connection to an AC system U_n

2 Connection to a DC system U_n

3 Connection to an IT system with coupling device

4 Connection to a 3(N)AC system

5 Connection to the IT system to be monitored (L1/+, L2, L3/-)

6 Separate connection of KE, E to PE

7 (K1) Alarm relay 1, available changeover contacts

8 (K2) Alarm relay 2, available changeover contacts

9 Switchable resistor R for RS-485 bus termination

10 Ethernet interface

11 Digital interface

* For systems > 690 V and with overvoltage category III a fuse for the connection to the system to be monitored must be provided.

Recommendation: 2A screw-in fuses.

Provide line protection!

According to DIN VDE 0100-430, a line protection shall be provided for the supply voltage.

NOTE:

According to DIN VDE 0100-430, devices for protection against a short circuit can be omitted for the coupling of terminals L1/+ and L3/- to the IT system ≤ 690 V to be monitored if the wiring is carried out in such a manner as to reduce the risk of a short circuit to a minimum. (Recommendation: Ensure short-circuit-proof and earth-fault-proof wiring).

The connecting lines L1/+, L2, L3/- to the system to be monitored must be carried out as spur lines. No load current may be conducted through the terminals.

For UL applications:

Use 60/70°C copper lines only!
UL and CSA application require the supply voltage to be protected via 5 A fuses.

Digital interface X1

Digital interface	Terminal	Colour
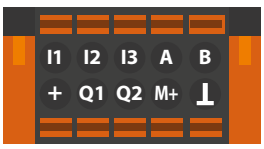 X1	I1	Input 1
	I2	Input 2
	I3	Input 3
	A	RS-485 A
	B	RS-485 B
	+	+24 V
	Q1	Output 1
	Q2	Output 2
	M+	Analogue output
	⊥	Ground

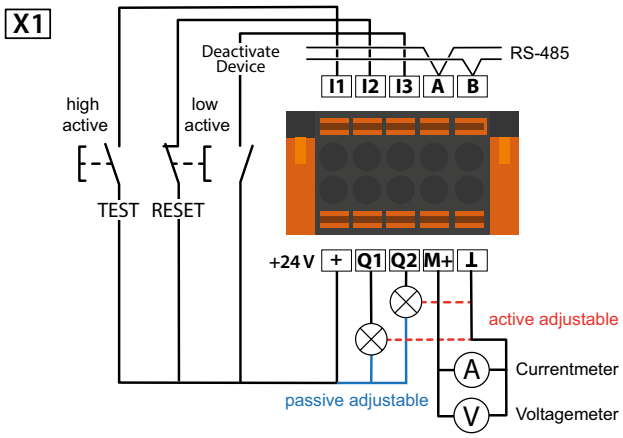

ISOMETER® iso685-…-B

Insulation monitoring device for unearthed AC, AC/DC and DC systems (IT systems)

AC/DC

Typical applications

- AC, DC or AC/DC main circuits
- AC/DC main circuits with directly connected DC components, such as rectifiers, converters, variable-speed drives
- UPS systems, battery systems
- Heaters with phase control
- Systems including switched-mode power supplies
- IT systems with high leakage capacitances

Approvals

Device features

- ISOMETER® for IT AC systems with galvanically connected rectifiers or inverters and for IT DC systems (IT = unearthed systems)
- Automatic adaptation to the existing system leakage capacitance
- Combination of ***AMP***^{Plus} and other profile-specific measurement methods
- Two separately adjustable response value ranges of 1 kΩ…10 MΩ
- High-resolution graphic LC display for excellent readability and recording of the device status
- Connection monitoring (monitoring of the measuring lines)
- Automatic device self test
- Graphical representation of the insulation resistance over time (isoGraph)
- History memory with real-time clock (buffer for three days) for storing 1023 alarm messages with date and time
- Current or voltage output 0(4)…20 mA, 0…400 µA, 0…10 V, 2…10 V (galvanically separated), which is analogous to the measured insulation value of the system
- Freely programmable digital inputs and outputs
- Remote setting via the Internet or Intranet (Webserver/Option: COMTRAXX® Gateway).
- Worldwide remote diagnosis via the Internet
- RS-485/BS (Bender sensor bus) for communication with other Bender devices
- ISOnet: Internal separation of the ISOMETER® from the IT system to be monitored (e.g. if several IT systems are interconnected)
- BCOM, Modbus TCP/RTU and web server
- Voltage expandable via coupling devices

Device variants

- **iso685-D-B**
  This device variant features a high-resolution graphic LC display and operating controls for direct operation of the device functions. It **cannot** be combined with an FP200.
- **iso685-S-B**
  This device variant features **neither a display nor operating controls**. It can only be used in combination with the FP200 and it is operated via this front panel.
- **Option "W"**
  The ISOMETER®s with and without integrated display are available with option "W" for extreme climatic and mechanical conditions (ISOMETER® iso685W-D-B and iso685W-S-B).

Standards

The ISOMETER® has been developed in compliance with the following standards:

- DIN EN 61557-8 (VDE 0413-8)
- IEC 61557-8

Further information

For further information refer to our product range on www.bender.de.

Ordering information

Type		Nominal system voltage range U_n	Supply voltage U_s	Display	Option W	Art. No.
iso685-D-B		AC 0…690 V; 0.1…460 Hz DC 0…1000 V	AC 24…240 V; 50…400 Hz DC 24…240 V	integrated	–	B91067020
iso685W-D-B					-40…+70°C, 3K23, 3M12	B91067020W
iso685-S-B + FP200				detached	–	B91067220
iso685W-S-B + FP200W					-40…+70°C, 3K23, 3M12	B91067220W

Accessories

Description	Art. No.
A set of screw terminals[1)]	B91067901
A set of push-wire terminals	B91067902
Enclosure accessories (terminal cover, 2 mounting clips) [1)]	B91067903

[1)] included in the scope of delivery

Suitable system components

Description	Type	Art. No.	Page
Device version without display	iso685-S-B	B91067120	–
	iso685W-S-B	B91067120W	–
Display for front panel mounting	FP200	B91067904	**49**
	FP200W	B91067904W	**49**
Coupling devices	AGH150W-4	B98018006	**363**
	AGH204S-4	B914013	**365**
	AGH520S	B913033	**366**
	AGH676S-4	B913055	**369**

Suitable measuring instruments on request!

Technical data

Insulation coordination according to IEC 60664-1/IEC 60664-3

Definitions:	
Measuring circuit (IC1)	L1/+, L2, L3/-
Supply circuit (IC2)	A1, A2
Output circuit 1 (IC3)	11, 12, 14
Output circuit 2 (IC4)	21, 22, 24
Control circuit (IC5)	(E, KE), (X1, ETH, X3, X4)
Rated voltage	1000 V
Overvoltage category	III
Rated impulse voltage:	
IC1/(IC2-5)	8 kV
IC2/(IC3-5)	4 kV
IC3/(IC4-5)	4 kV
IC4/IC5	4 kV
Rated insulation voltage:	
IC1/(IC2-5)	1000 V
IC2/(IC3-5)	250 V
IC3/(IC4-5)	250 V
IC4/IC5	250 V
Pollution degree for accessible parts on the outside of the device housing (U_n < 690 V)	3
Pollution degree for accessible parts on the outside of the device housing (U_n >690 < 1000 V)	2
Protective separation (reinforced insulation) between:	
IC1/(IC2-5)	Overvoltage category III, 1000 V
IC2/(IC3-5)	Overvoltage category III, 300 V
IC3/(IC4-5)	Overvoltage category III, 300 V
IC4/IC5	Overvoltage category III, 300 V
Voltage test (routine test) according to IEC 61010-1:	
IC2/(IC3-5)	AC 2,2 kV
IC3/(IC4-5)	AC 2,2 kV
IC4/IC5	AC 2,2 kV

Supply voltage

Supply via A1/+, A2/-:

Supply voltage range U_s	AC/DC 24…240 V
Tolerance of U_s	-30…+15%
Maximum permissible input current of U_s	650 mA
Frequency range of U_s	DC, 50…400 Hz [1)]
Tolerance of the frequency range of U_s	-5…+15 %
Power consumption, typically DC	≤ 12 W
Power consumption, typically 50/60 Hz	≤ 12 W/21 VA
Power consumption, typically 400 Hz	≤ 12 W/45 VA

Supply via X1:

Supply voltage U_s	DC 24 V
Tolerance of U_s	DC -20…+25 %

IT system being monitored

Nominal system voltage range U_n	AC 0…690 V DC 0…1000 V AC/DC 0…600 V (for UL applications)
Tolerance of U_n	AC/DC +15 %
Frequency range of U_n	DC, 0.1…460 Hz
Max. AC voltage $U_{\sim}$ in the frequency range f_n = 0.1…4 Hz	$U_{\sim\,max}$ = 50 V/Hz^2 *(1+ f_n^2)

Response values

Response value R_{an1} (alarm 1)	1 kΩ…10 MΩ
Response value R_{an2} (alarm 2)	1 kΩ…10 MΩ
Relative uncertainty (acc. to IEC 61557-8)	profile dependent, ±15 %, at least ±1 kΩ
Hysteresis	25 %, at least 1 kΩ

Time response

Response time t_{an} at R_F = 0.5 x R_{an} (R_{an} = 10 kΩ) and C_e = 1 µF according to IEC 61557-8	profile dependent, typ. 4 s (see diagrams in manual)
Response time DC alarm at C_e = 1 µF	profile dependent, typ. 2 s (see diagram in manual)
Start-up delay $T_{start-up}$	0…600 s

Measuring circuit

Measuring voltage U_m	profile dependent, ±10 V, ±50 V (see profile overview)
Measuring current I_m	≤ 403 µA
Internal resistance R_i, Z_i	≥ 124 kΩ
Internal resistance on decouppled systems (inactive by I/O, inactive by ISOnet or cut-off)	typ. 50 MΩ
Permissible extraneous DC voltage U_{fg}	≤ 1200 V
Permissible system leakage capacitance C_e	profile dependent, 0…1000 µF

Measuring ranges

Measuring range f_n	0.1…460 Hz
Tolerance measurement of f_n	±1 % ±0.1 Hz
Voltage range measurement of f_n	AC 25…690 V
Measuring range U_n	AC 25…690 V DC 0…1000 V
Voltage range measurement of U_n	AC/DC > 10 V
Tolerance measurement of U_n	±5 % ±5 V
Measuring range C_e	0…1000 µF
Tolerance measurement of C_e	±10 % ±10 µF
Frequency range measurement of C_e	DC, 30…460 Hz
Min. insulation resistance measurement of C_e	depending on the profile and coupling mode, typ. > 10 kΩ

Display

Indication	graphic display 127 x 127 pixels, 40 x 40 mm [2)]
Display range measured value	0.1 kΩ…20 MΩ
Operating uncertainty (according to IEC 61557-8)	±15 %, at least ±1 kΩ

LEDs

ON (operation LED)	green
SERVICE	yellow
ALARM 1	yellow
ALARM 2	yellow

In-/Outputs (X1-Interface)

Cable length X1 (unshielded cable)	≤ 10 m
Cable length X1 (shielded cable, shield connected to earth (PE) on one end, recommended: J-Y(St)Y min. 2x0,8)	≤ 100 m
Total max. supply output current for each output (device supplied by X1.+/X1.GND)	max. 1 A
Total max. supply output current on X1 (device supplied by A1+/A2-)	max. 200 mA
Total max. supply output current on X1 (device supplied by A1+/A2- between 16,8 V and 40 V)	I_{LmaxX1} = 10 mA + 7 mA/V * U_s [3)] (negative values are not allowed for I_{LmaxX1})

Digital Inputs (I1, I2, I3)

Number	3
Operating mode, adjustable	active high, active low
Functions	off, test, reset, deactivate device, start initial measurement
Voltage	Low DC -3…5 V, High DC 11…32 V
Tolerance Voltage	±10 %

Digital Outputs (Q1, Q2)

Number	2
Operating mode, adjustable	active, passive
Functions	off, Ins. alarm 1, Ins. alarm 2, connection fault, DC- alarm [4)], DC+ alarm [4)], symmetrical alarm, device fault, common alarm, measurement complete, device inactive, DC offset alarm
Voltage	passive DC 0…32 V, active DC 0/19.2…32 V

Analogue Output (M+)

Number	1
Operating mode	linear, midscale point 28 kΩ/120 kΩ
Functions	insulation value, DC offset
Current	0…20 mA (< 600 Ω), 4…20 mA (< 600 Ω), 0…400 µA (< 4 kΩ)
Voltage	0…10 V (> 1 kΩ), 2…10 V (> 1 kΩ)
Tolerance related to the current/voltage final value	±20 %

Interfaces

Field bus:

Interface/protocol	web server/Modbus TCP/BCOM
Data rate	10/100 Mbit/s, autodetect
Max. amount Modbus requests	< 100/s
Cable length	≤ 100 m
Connection	RJ45
IP address	DHCP/manual 192.168.0.5
Network mask	255.255.255.0
BCOM address	system-1-0
Function	communication interface

ISOnet:

Number ISOnet devices	≤ 20
Max. nominal system voltage range ISOnet	AC 690 V; DC 1000 V

Sensor bus:

Interface/protocol	RS-485/BS/Modbus RTU
Data rate	9.6 kBaud/s
Cable length	≤ 1200 m
Cable: twisted pair, one end of shield connected to PE	recommended: J-Y(St)Y min. 2x0.8
Connection	terminals X1.A, X1.B
Terminating resistor at the beginning and at the end of the transmission path	120 Ω, can be connected internally
Device address, BS bus	1…90

Switching elements

Number of switching elements	2 changeover contacts
Operating mode	N/C operation/N/O operation
Contact 11-12-14/21-22-24	off, Ins. alarm 1, Ins. alarm 2, connection fault, DC- alarm [4], DC+ alarm [4], symmetrical alarm, device fault, common alarm, measurement complete, device inactive, DC offset alarm
Electrical endurance under rated operating conditions, number of cycles	10.000

Contact data acc. to IEC 60947-5-1:

Utilisation category	AC-13	AC-14	DC-12	DC-12	DC-12	DC-12
Rated operational voltage	230 V	230 V	24 V	48 V	110 V	220 V
Rated operational current	5 A	3 A	1 A	1 A	0.2 A	0.1 A
Rated insulation voltage ≤ 2000 m NN						250 V
Rated insulation voltage ≤ 3000 m NN						160 V
Minimum contact rating						1 mA at AC/DC ≥ 10 V

Environment/EMC

EMC	IEC 61326-2-4 [5]

Ambient temperatures:

Operating temperature	-25…+55 °C
Transport	-40…+85 °C
Long-term storage	-40…+70 °C

Classification of climatic conditions acc. to IEC 60721 (related to temperature and relative humidity)**:**

Stationary use (IEC 60721-3-3)	3K22
Transport (IEC 60721-3-2)	2K11
Long-term storage (IEC 60721-3-1)	1K22

Classification of mechanical conditions acc. to IEC 60721:

Stationary use (IEC 60721-3-3)	3M11
Transport (IEC 60721-3-2)	2M4
Long-term storage (IEC 60721-3-1)	1M12
Area of application	≤ 3000 m NN

Connection

Connection type	pluggable screw-type terminal or push-wire terminal

Screw-type terminals:

Nominal current	≤ 10 A
Tightening torque	0.5…0.6 Nm (5…7 lb-in)
Conductor sizes	AWG 24-12
Stripping length	7 mm
rigid/flexible	0.2…2.5 mm²
flexible with ferrules, with/without plastic sleeve	0.25…2.5 mm²
Multiple conductor, rigid	0.2…1 mm²
Multiple conductor, flexible	0.2…1.5 mm²
Multiple conductor, flexible with ferrule without plastic sleeve	0.25…1 mm²
Multiple conductor, flexible with TWIN ferrule with plastic sleeve	0.5…1.5 mm²

Push-wire terminals:

Nominal current	≤ 10 A
Conductor sizes	AWG 24-12
Stripping length	10 mm
rigid/flexible	0.2…2.5 mm²
flexible with ferrules, with/without plastic sleeve	0.25…2.5 mm²
Multiple conductor, flexible with TWIN ferrule with plastic sleeve	0.5…1.5 mm²

Push-wire terminals X1:

Nominal current	≤ 8 A
Conductor sizes	AWG 24-16
Stripping length	10 mm
rigid/flexible	0.2…1.5 mm²
flexible with ferrule without plastic sleeve	0.25…1.5 mm²
flexible with TWIN ferrule with plastic sleeve	0.25…0.75 mm²

Other

Operating mode	continuous operation
Mounting (0°)	display oriented, cooling slots must be ventilated vertically [6]
Degree of protection internal components	IP40
Degree of protection terminals	IP20
DIN rail mounting acc. to	IEC 60715
Screw fixing	3 x M4 with mounting clip
Enclosure material	polycarbonate
Flammability class	V-0
ANSI code	64
Dimensions (W x H x D	108 x 93 x 110 mm
Documentation number	D00177
Weight	< 390 g

Option "W" data different from the standard version

Rated operational current of switching elements	max. 3 A (for UL applications)

Ambient temperatures:

Operating temperature	-40…+70 °C -40…+65 °C (for UL applications)
Transport	-40…+85 °C
Long-term storage	-40…+70 °C

Classification of climatic conditions acc. to IEC 60721:

Stationary use (IEC 60721-3-3)	3K23

Classification of mechanical conditions acc. to IEC 60721:

Stationary use (IEC 60721-3-3)	3M12

1) At a frequency > 200 Hz, the connection of X1 must be insulated. Only permanently installed devices which at least have overvoltage category CAT2 (300V) may be connected.

2) Indication limited outside the temperature range -25…+55 °C.

3) U_s [Volt] = supply voltage ISOMETER®

4) For U_n ≥ 50 V only.

5) This is a class A product. In a domestic environment, this product may cause radio interference. In this case, the user may be required to take corrective actions.

6) Recommendation: Devices mounted at 0 ° (display-oriented, cooling slots must be ventilated vertically).

For devices mounted at an angle of 45°, the max. working temperature is reduced by 10 °C.
For devices mounted at an angle of 90°, the max. working temperature is reduced by 20 °C.

Dimension diagram (dimensions in mm)

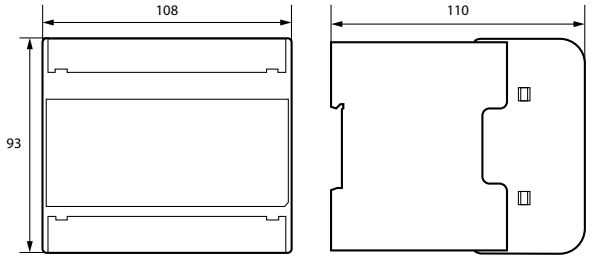

Connection to FP200

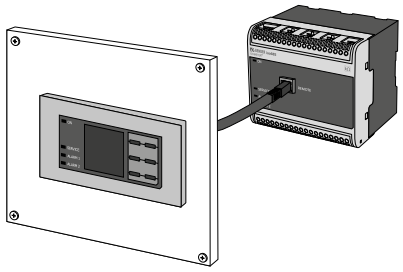

Wiring diagram

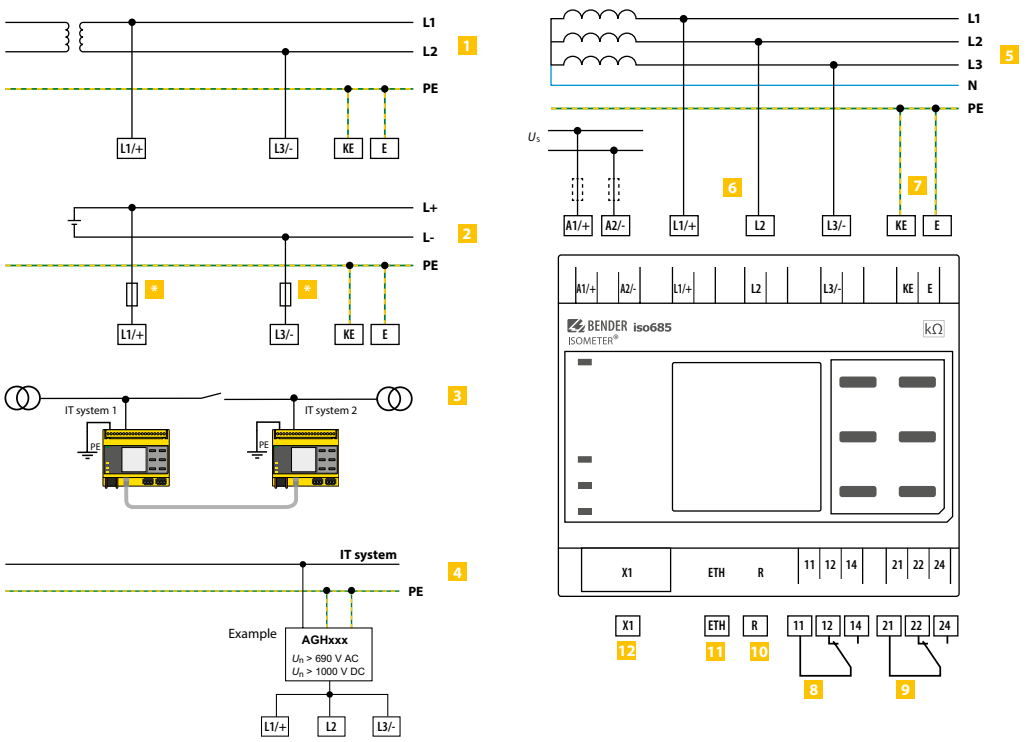

1 Connection to an AC system U_n

2 Connection to a DC system U_n

3 Linked with two IT systems which can be interconnected via a coupling switch. Information regarding the state of the coupling switch is not necessary.

4 Connection to an IT system with coupling device

5 Connection to a 3(N)AC system

6 Connection to the IT system to be monitored (L1/+, L2, L3/-)

7 Separate connection of KE, E to PE

8 (K1) Alarm relay 1, available changeover contacts

9 (K2) Alarm relay 2, available changeover contacts

10 Switchable resistor R for RS-485 bus termination

11 Ethernet interface

12 Digital interface

* For systems > 690 V and with overvoltage category III a fuse for the connection to the system to be monitored must be provided. Recommendation: 2A screw-in fuses.

Provide line protection!

According to DIN VDE 0100-430, a line protection shall be provided for the supply voltage.

NOTE

According to DIN VDE 0100-430, devices for protection against a short circuit can be omitted for the coupling of terminals L1/+ and L3/- to the IT system ≤ 690 V to be monitored if the wiring is carried out in such a manner as to reduce the risk of a short circuit to a minimum. Ensure short-circuit-proof and earth-fault-proof wiring.

The connecting lines L1/+, L2, L3/- to the system to be monitored must be carried out as spur lines. No load current may be conducted through the terminals.

For UL applications:

Use 60/70°C copper lines only!
UL and CSA application require the supply voltage to be protected via 5 A fuses.

Digital interface X1

Digital interface	Terminal	Colour
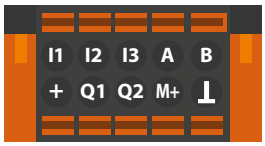 X1	I1	Input 1
	I2	Input 2
	I3	Input 3
	A	RS-485 A
	B	RS-485 B
	+	+24 V
	Q1	Output 1
	Q2	Output 2
	M+	Analogue output
	⊥	Ground

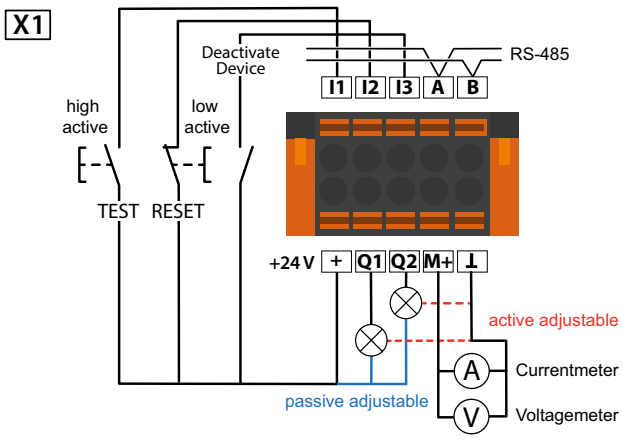

ISOMETER® iso685-…-P

Insulation monitoring device with integrated locating current injector for IT AC systems with galvanically connected rectifiers or converters and for IT DC systems

AC/DC

Typical applications

- AC, DC or AC/DC main circuits
- AC/DC main circuits with directly connected DC components, such as rectifiers, converters, variable-speed drives
- UPS systems, battery systems
- Heaters with phase control
- Systems including switch-mode power supplies
- IT systems with high leakage capacitances
- Installations with insulation fault location

Approvals

Device features

iso685-…-P

- ISOMETER® for IT AC systems with galvanically connected rectifiers or inverters and for IT DC systems (IT = unearthed systems)
- Automatic adaptation to the existing system leakage capacitance
- Combination of and other profile-specific measurement methods
- Two separately adjustable response value ranges of 1 kΩ…10 MΩ for Alarm 1 and Alarm 2
- High-resolution graphical LC display
- Connection monitoring (monitoring of the measuring lines)
- Automatic device self test
- Graphical representation of the insulation resistance over time (isoGraph)
- History memory with real-time clock (buffer for three days) for storing 1023 alarm messages with date and time
- Current or voltage output 0(4)…20 mA, 0…400 µA, 0…10 V, 2…10 V (galvanically separated), which is analogous to the measured insulation value of the system
- Freely programmable digital inputs and outputs
- Remote setting via the Internet or Intranet (Webserver/Option: COMTRAXX® gateway)
- Worldwide remote diagnosis via the Internet (made available by Bender Service only)
- RS-485/BS (Bender sensor bus) for data exchange with other Bender devices
- ISOnet: Internal separation of the ISOMETER® from the IT system to be monitored (e.g. if several IT systems are interconnected)
- BCOM, Modbus TCP and web server
- Locating current injection for selective insulation fault location
- Indication of the insulation faults selectively located by the EDS system
- Parameter setting of EDS systems
- Customer-specific texts for each measuring channel

EDS44x

- Insulation fault location in AC, 3AC and DC IT systems
- Up to 12 measuring current transformers of the CTAC…, WR…, WS… measuring current transformer series can be connected
- Response sensitivity insulation fault location: EDS440 2…10 mA, EDS441 0.2…1 mA
- Response sensitivity residual current measurement: EDS440 100 mA…10 A, EDS441 100 mA…1 A
- Communication of the components via BS bus (RS-485) or BB bus

Device variants

- **iso685-D-P**
  The device variant ISOMETER® iso685-D-P features a high-resolution graphic LC display and operating controls for direct operation of the device functions. It **cannot** be combined with an FP200.
- **iso685-S-P**
  The device variant ISOMETER® iso685-S-P features **neither a display nor operating controls**. It can only be used in combination with the FP200 and it is operated via this front panel.
- **Option "W"**
  The ISOMETER®s with and without integrated display are available with option "W" for extreme climatic and mechanical conditions (ISOMETER® iso685W-D-P and iso685W-S-P).

Standards

The ISOMETER® has been developed in compliance with the following standards:

- DIN EN 61557-8 (VDE 0413-8)
- IEC 61557-8

Further information

For further information refer to our product range on www.bender.de.

Ordering information

Type		Nominal system voltage range U_n	Supply voltage U_s	Display	Option W	Art. No.
iso685-D-P		AC 0…690 V; 0,1…460 Hz DC 0…1000 V	AC 24…240 V; 50…400 Hz DC 24…240 V	integrated	–	B91067030
iso685W-D-P					-40…+70 °C, 3K23, 3M12	B91067030W
iso685-S-P + FP200				detached	–	B91067230
iso685W-S-P + FP200W					-40…+70 °C, 3K23, 3M12	B91067230W

Insulation fault locators

Description	Supply voltage U_s [1]	Response value	Type	Art. No.	Page
Insulation fault locators	AC/DC 24…240V	2…10 mA	EDS440-S-1	B91080201	**140**
			EDS440W-S-1	B91080201W	**140**
			EDS440-L-4	B91080202	**140**
			EDS440W-L-4	B91080202W	**140**
		0.2…1 mA	EDS441-S-1	B91080204	**140**
			EDS441W-S-1	B91080204W	**140**
			EDS441-L-4	B91080205	**140**
			EDS441W-L-4	B91080205W	**140**
			EDS441-LAB-4	B91080207	**140**
			EDS441W-LAB-4	B91080207W	**140**
Relay module	DC 24 V	–	IOM441-S	B95012057	**392**
			IOM441W-S	B95012057W	**392**

[1] Absolute values

Accessories

Description	Art. No.
A set of screw-type terminals[1]	B91067901
A set of push-wire terminals	B91067902
Enclosure accessories (terminal cover, 2 mounting clips) [1]	B91067903
BB bus 6TE connector [2]	B98110001

[1] included in the scope of delivery

[2] Necessary for the connection of the ISOMETER®s with an EDS44…-S

Suitable system components

Description	Type	Art. No.	Page
Device version without display	iso685-S-P	B91067130	**–**
	iso685W-S-P	B91067130W	**–**
Display for front panel mounting	FP200	B91067904	**49**
	FP200W	B91067904W	**49**

Suitable measuring instruments on request!

Insulation coordination according to IEC 60664-1/IEC 60664-3

Definitions:	
Measuring circuit (IC1)	(L1/+, L2, L3/-)
Supply circuit (IC2)	A1, A2
Output circuit 1 (IC3)	11, 12, 14
Output circuit 2 (IC4)	21, 22, 24
Control circuit (IC5)	(E, KE), (X1, ETH, X3, X4)
Rated voltage	1000 V
Overvoltage category	III
Rated impulse voltage:	
IC1/(IC2-5)	8 kV
IC2/(IC3-5)	4 kV
IC3/(IC4-5)	4 kV
IC4/IC5	4 kV
Rated insulation voltage:	
IC1/(IC2-5)	1000 V
IC2/(IC3-5)	250 V
IC3/(IC4-5)	250 V
IC4/IC5	250 V
Pollution degree for accessible parts on the outside of the device housing (U_n < 690 V)	3
Pollution degree for accessible parts on the outside of the device housing (U_n >690 < 1000 V)	2
Protective separation (reinforced insulation) between:	
IC1/(IC2-5)	Overvoltage category III, 1000 V
IC2/(IC3-5)	Overvoltage category III, 300 V
IC3/(IC4-5)	Overvoltage categoryIII, 300 V
IC4/IC5	Overvoltage category III, 300 V
Voltage test (routine test) according to IEC 61010-1:	
IC2/(IC3-5)	AC 2,2 kV
IC3/(IC4-5)	AC 2,2 kV
IC4/IC5	AC 2,2 kV

Supply voltage

Supply via A1/+, A2/-:

Supply voltage range U_s	AC/DC 24…240 V
Tolerance of U_s	-30…+15%
Maximum permissible input current of U_s	650 mA
Frequency range of U_s	DC, 50…400 Hz [1]
Tolerance of the frequency range of U_s	-5…+15 %
Power consumption, typically DC	≤ 12 W
Power consumption, typically 50/60 Hz	≤ 12 W/21 VA
Power consumption, typically 400 Hz	≤ 12 W/45 VA

Supply via X1:

Supply voltage U_s	DC 24 V
Tolerance of U_s	DC -20…+25 %

IT system being monitored

Nominal system voltage range U_n	AC 0…690 V DC 0…1000 V AC/DC 0…600 V (for UL applications)
Tolerance of U_n	AC/DC +15 %
Frequency range of U_n	DC 0.1…460 Hz
Max. AC voltage $U_{\sim}$ in the frequency range f_n = 0.1…4 Hz	$U_{\sim\,max} = 50\ V/Hz^2 * (1 + f_n^2)$

Response values

Response value R_{an1} (alarm 1)	1 kΩ…10 MΩ
Response value R_{an2} (alarm 2)	1 kΩ…10 MΩ
Relative uncertainty (acc. to IEC 61557-8)	dependent on the profile, ±15 %, at least ±1 kΩ
Hysteresis	25 %, at least 1 kΩ

Time response

Response time t_{an} at R_F = 0.5 x R_{an} (R_{an} = 10 kΩ) and C_e = 1 µF according to IEC 61557-8	profile dependent, typ. 4 s (see diagrams in manual)
Response time DC alarm at Ce = 1 µF	profile dependent, typ. 2 s (see diagram in manual)
Start-up delay $T_{start\text{-}up}$	0…600 s

Measuring circuit

Measuring voltage U_m	profile dependent, ±10 V, ±50 V (see profile overview)
Measuring current Im	≤ 403 µA
Internal resistance R_i, Z_i	≥ 124 kΩ
Internal resistance on decouppled systems (inactive by I/O, inactive by ISOnet or cut-off)	typ. 50 MΩ
Permissible extraneous DC voltage U_{fg}	≤ 1200 V
Permissible system leakage capacitance C_e	profile dependent, 0…1000 µF

Measuring ranges

Measuring range f_n	0.1…460 Hz
Tolerance measurement of f_n	±1 % ±0.1 Hz
Voltage range measurement of f_n	AC 25…690 V
Measuring range U_n	AC 25…690 V DC 0…1000 V
Voltage range measurement of U_n	AC/DC > 10 V
Tolerance measurement of U_n	±5 % ±5 V
Measuring range C_e	0…1000 µF
Tolerance measurement of C_e	±10 % ±10 µF
Frequency range measurement of C_e	DC, 30…460 Hz
Min. insulation resistance measurement of C_e	depending on the profile and coupling mode, typ. > 10 kΩ

Display

Indication	graphic display 127 x 127 pixels, 40 x 40 mm [2]
Display range measured value	0.1 kΩ…20 MΩ
Operating uncertainty (according to IEC 61557-8)	±15 %, at least ±1 kΩ

LEDs

ON (operation LED)	green
PGH ON	yellow
SERVICE	yellow
ALARM 1	yellow
ALARM 2	yellow

In-/Outputs (X1-Interface)

Cable length X1 (unshielded cable)	≤ 10 m
Cable length X1 (shielded cable, shield connected to earth (PE) on one end, recommended: J-Y(St)Y min. 2x0,8)	≤ 100 m
Total max. supply output current for each output (device supplied by X1.+/X1.GND)	max. 1 A
Total max. supply output current on X1 (device supplied by A1+/A2-)	max. 200 mA
Total max. supply output current on X1 (device supplied by A1+/A2- between 16,8 V and 40 V)	I_{LmaxX1} = 10 mA + 7 mA/V * U_s [3] (negative values are not allowed for I_{LmaxX1})

Digital Inputs (I1, I2, I3)

Number	3
Operating mode, adjustable	active high, active low
Functions	off, test, reset, deactivate device, start initial measurement, insulation fault location
Voltage	Low DC -3…5 V, High DC 11…32 V
Tolerance Voltage	±10 %

Digital Outputs (Q1, Q2)

Number	2
Operating mode, adjustable	active, passive
Functions	off, Ins. alarm 1, Ins. alarm 2, connection fault, DC- alarm [4], DC+ alarm [4], symmetrical alarm, device fault, common alarm, measurement complete, device inactive, DC offset alarm
Voltage	passive DC 0…32 V, active DC 0/19.2…32 V

Analogue Output (M+)

Number	1
Operating mode	linear, midscale point 28 kΩ/120 kΩ
Functions	insulation value, DC offset
Current	0…20 mA (< 600 Ω), 4…20 mA (< 600 Ω), 0…400 µA (< 4 kΩ)
Voltage	0…10 V (> 1 kΩ), 2…10 V (> 1 kΩ)
Tolerance related to the current/voltage final value	±20 %

Interfaces

Field bus:

Interface/protocol	web server/Modbus TCP/BCOM
Data rate	10/100 Mbit/s, autodetect
Max. amount Modbus requests	< 100/s
Cable length	≤ 100 m
Connection	RJ45
IP address	DHCP/manual* 192.168.0.5*
Network mask	255.255.255.0*
BCOM address	system-1-0
Function	communication interface

ISOnet:

Number ISOnet devices	0…20 devices
Max. nominal system voltage range ISOnet	AC 690 V/DC 1000 V

EDSsync:

Number EDSsync devices	2…10 devices

ISOloop

Number ISOloop devices	2…10 devices

Technical data (continued)

Sensor bus:

Interface/protocol	RS-485/BB-Bus/Modbus RTU
Data rate	9.6 kBaud/s
Cable length	≤ 1200 m
Cable: twisted pair, one end of shield connected to PE	recommended: J-Y(St)Y min. 2x0.8
Connection	terminals X1.A, X1.B
Terminating resistor	120 Ω, can be connected internally
Device address	1…90

Switching elements

Number of switching elements	2 changeover contacts
Operating mode	N/C operation/N/O operation
Contact 11-12-14/21-22-24	off, Ins. alarm 1, Ins. alarm 2, connection fault, DC- alarm [4], DC+ alarm [4], symmetrical alarm, device fault, common alarm, measurement complete, device inactive, DC offset alarm
Electrical endurance under rated operating conditions, number of cycles	10.000

Contact data acc. to IEC 60947-5-1:

Utilisation category	AC-13	AC-14	DC-12	DC-12	DC-12	DC-12
Rated operational voltage	230 V	230 V	24 V	48 V	110 V	220 V
Rated operational current	5 A	3 A	1 A	1 A	0.2 A	0.1 A
Rated insulation voltage ≤ 2000 m NN						250 V
Rated insulation voltage ≤ 3000 m NN						160 V
Minimum contact rating						1 mA at AC/DC ≥ 10 V

Environment/EMC

EMC	IEC 61326-2-4 [5]

Ambient temperatures:

Operating temperature	-25…+55 °C
Transport	-40…+85 °C
Long-term storage	-40…+70 °C

Classification of climatic conditions acc. to IEC 60721 (related to temperature and relative humidity)**:**

Stationary use (IEC 60721-3-3)	3K22
Transport (IEC 60721-3-2)	2K11
Long-term storage (IEC 60721-3-1)	1K22

Classification of mechanical conditions acc. to IEC 60721:

Stationary use (IEC 60721-3-3)	3M11
Transport (IEC 60721-3-2)	2M4
Long-term storage (IEC 60721-3-1)	1M12
Area of application	≤ 3000 m NN

Connection

Connection type	pluggable screw-type terminal or push-wire terminal

Screw-type terminals:

Nominal current	≤ 10 A
Tightening torque	0.5…0.6 Nm (5…7 lb-in)
Conductor sizes	AWG 24-12
Stripping length	7 mm
rigid/flexible	0.2…2.5 mm²
flexible with ferrules, with/without plastic sleeve	0.25…2.5 mm²
Multiple conductor, rigid	0.2…1 mm²
Multiple conductor, flexible	0.2…1.5 mm²
Multiple conductor, flexible with ferrule without plastic sleeve	0.25…1 mm²
Multiple conductor, flexible with TWIN ferrule with plastic sleeve	0.5…1.5 mm²

Push-wire terminals:

Nominal current	≤ 10 A
Conductor sizes	AWG 24-12
Stripping length	10 mm
rigid/flexible	0.2…2.5 mm²
flexible with ferrules, with/without plastic sleeve	0.25…2.5 mm²
Multiple conductor, flexible with TWIN ferrule with plastic sleeve	0.5…1.5 mm²

Push-wire terminals X1:

Nominal current	≤ 8 A
Conductor sizes	AWG 24-16
Stripping length	10 mm
rigid/flexible	0.2…1.5 mm²
flexible with ferrule without plastic sleeve	0.25…1.5 mm²
flexible with TWIN ferrule with plastic sleeve	0.25…0.75 mm²

Other

Operating mode	continuous operation
Mounting (0°)	display oriented, cooling slots must be ventilated vertically [6]
Degree of protection internal components	IP40
Degree of protection terminals	IP20
DIN rail mounting acc. to	IEC 60715
Screw fixing	3 x M4 with mounting clip
Enclosure material	polycarbonate
Flammability class	V-0
ANSI code	64
Dimensions (W x H x D)	108 x 93 x 110 mm
Documentation number	D00170
Weight	< 510 g

Option "W" data different from the standard version

Rated operational current of switching elements	max. 3 A (for UL applications)

Ambient temperatures

Operating temperature	-40…+70 °C -40…+65 °C (for UL applications)
Transport	-40…+85 °C
Long-term storage	-40…+70 °C

Classification of climatic conditions acc. to IEC 60721:

Stationary use (IEC 60721-3-3)	3K23

Classification of mechanical conditions acc. to IEC 60721:

Stationary use (IEC 60721-3-3)	3M12

1) At a frequency > 200 Hz, the connection of X1 ande Remote must be insulated. Only permanently installed devices which at least have overvoltage category CAT2 (300V) may be connected.

2) Indication limited outside the temperature range -25…+55 °C.

3) U_S [Volt] = ISOMETER® supply voltage

4) For U_n ≥ 50 V only.

5) This is a class A product. This product may cause radio interference in residential areas. In this case, the user may be required to take corrective actions.

6) Recommendation: Devices mounted at 0° (display oriented, cooling slots must be ventilated vertically)
For devices mounted at an angle of 45°, the max. working temperature is reduced by 10 °C.
For devices mounted at an angle of 90°, the max. working temperature is reduced by 20 °C.

Dimension diagram (dimensions in mm)

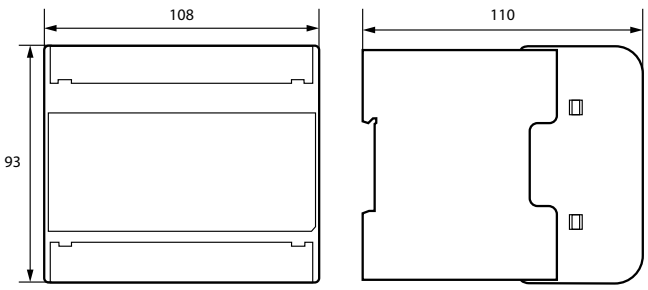

Connection to FP200

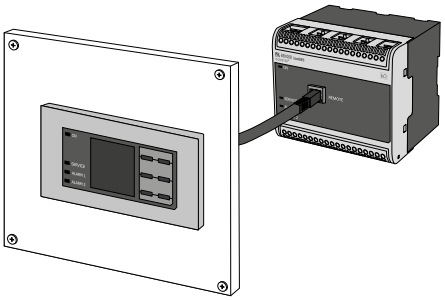

Wiring diagram

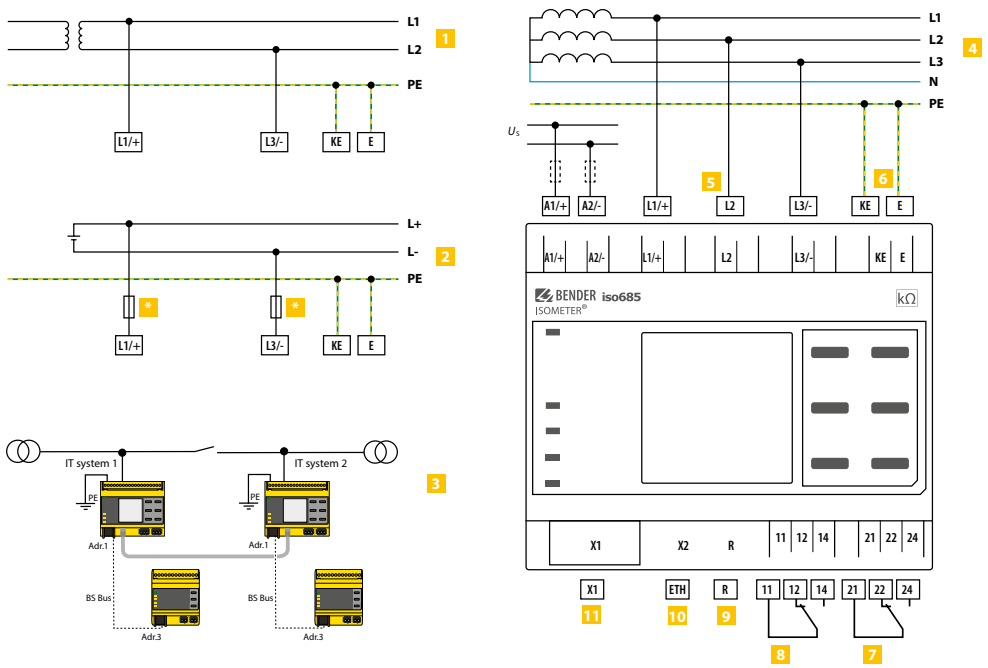

1 Connection to an AC system U_n

2 Connection to a DC system U_n

3 Linked with two IT systems which can be interconnected via a coupling switch. Information regarding the state of the coupling switch is not necessary.

4 Connection to a 3(N)AC system

5 Connection to the IT system to be monitored (L1/+, L2, L3/-)

6 Separate connection of KE, E to PE

7 (K1) Alarm relay 1, available changeover contacts

8 (K2) Alarm relay 2, available changeover contacts

9 Switchable resistor R for RS-485 bus termination

10 Ethernet interface

11 Digital interface

* For systems > 690 V and with overvoltage category III a fuse for the connection to the system to be monitored must be provided. Recommendation: 2A screw-in fuses.

Provide line protection!

According to DIN VDE 0100-430, a line protection shall be provided for the supply voltage.

Note

According to DIN VDE 0100-430, devices for protection against a short circuit can be omitted for the coupling of terminals L1/+ and L3/- to the IT system ≤ 690 V to be monitored if the wiring is carried out in such a manner as to reduce the risk of a short circuit to a minimum.
(A short-circuit-proof and earth-fault-proof wiring is recommended).

The connecting lines L1/+, L2, L3/- to the system to be monitored must be carried out as spur lines. No load current may be conducted through the terminals.

Digital interface X1

Digital interface	Terminal	Colour
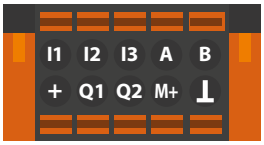 X1	I1	Input 1
	I2	Input 2
	I3	Input 3
	A	RS-485 A
	B	RS-485 B
	+	+24 V
	Q1	Output 1
	Q2	Output 2
	M+	Analogue output
	⊥	Ground

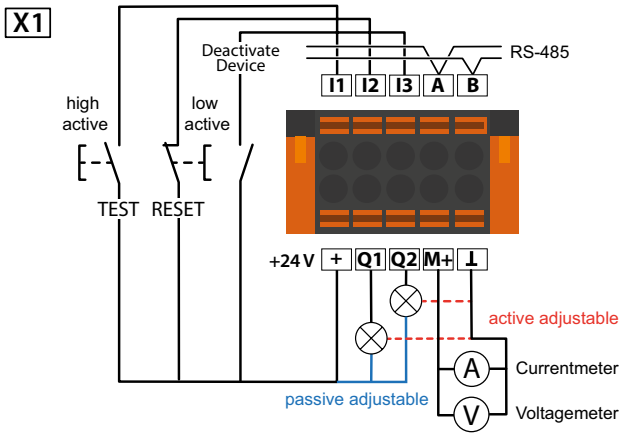

Connection example ISOMETER® with insulation fault locators

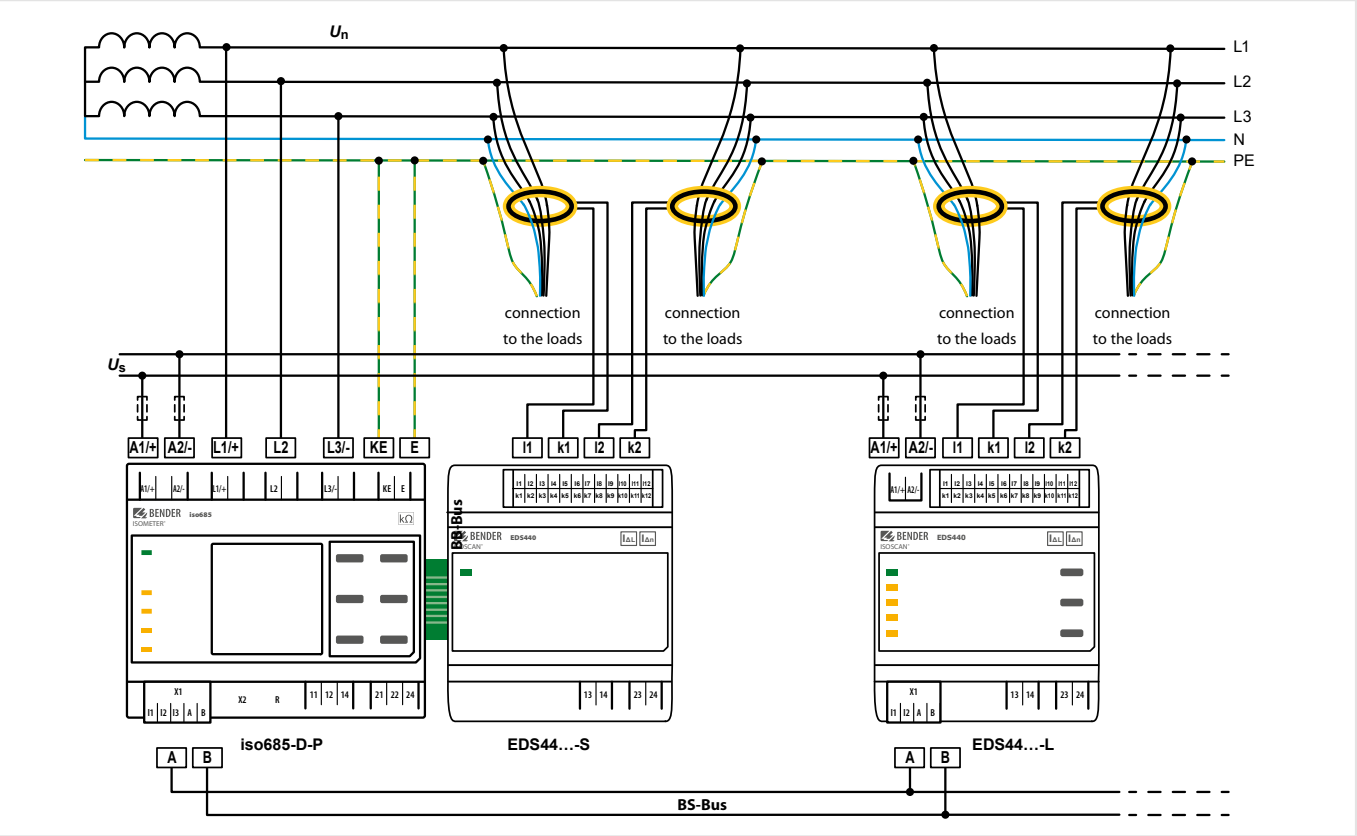

System setup

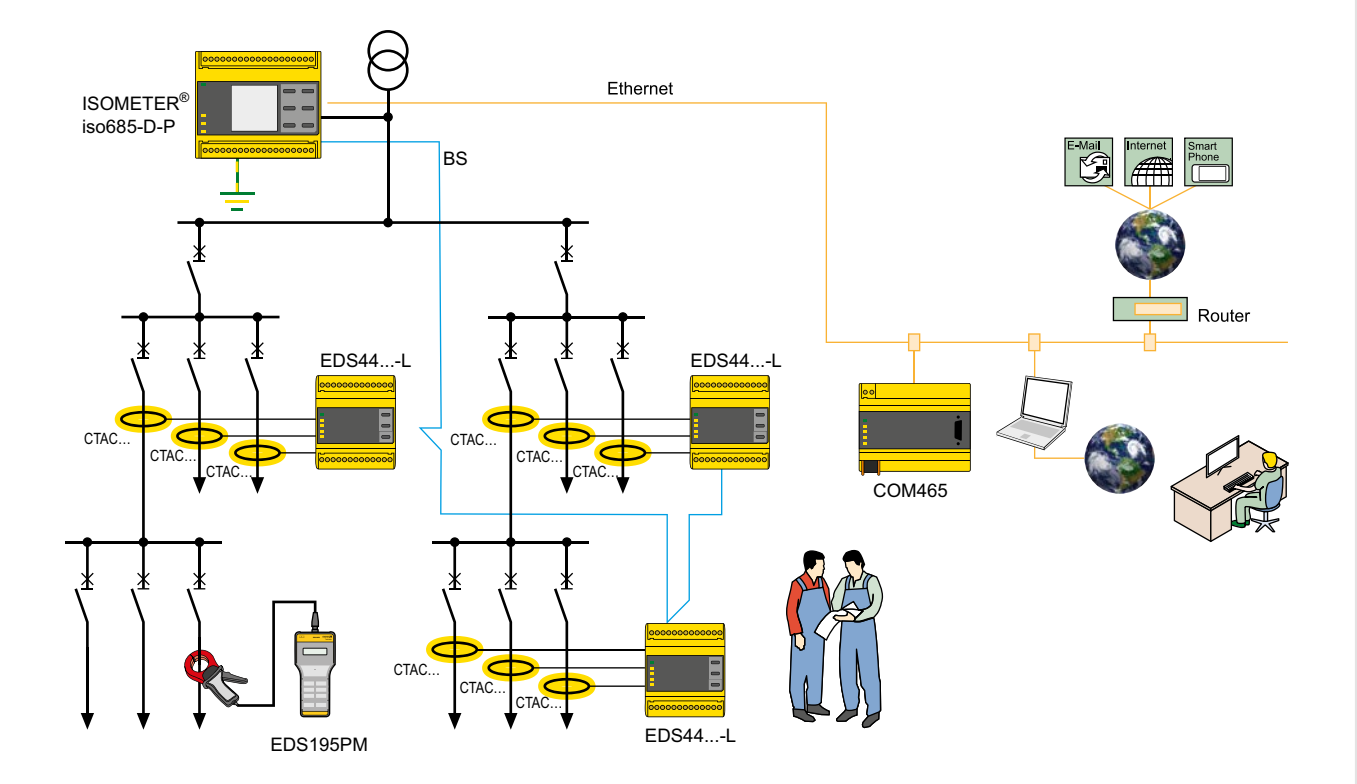

ISOMETER® isoNAV685-D

Insulation monitoring device for IT AC systems with galvanically connected rectifiers and converters

AC/DC

Typical applications

- AC/DC main circuits with directly connected DC components, such as rectifiers, converters, variable-speed drives
- Systems including switch mode power supplies
- Systems including frequency inverters

Approvals

Device features

- ISOMETER® for IT AC systems with galvanically connected rectifiers or inverters and for IT DC systems (IT = unearthed systems)
- Automatic adaptation to the existing system leakage capacitance
- Combination of ***AMP***^{Plus} and other profile-dependent measurement methods
- An adjustable response value for insulation monitoring in the range of 1 kΩ…10 MΩ (factory setting = 5 kΩ) and a response value of 150 V for the DC offset voltage
- High-resolution graphic LC display for excellent readability and recording of the device status
- Connection monitoring (monitoring of the measuring lines)
- Automatic device self test
- Graphical representation of the insulation resistance over time (isoGraph)
- History memory with real-time clock (buffer for three days) for storing 1023 alarm messages with date and time
- Current or voltage output 0(4)…20 mA, 0…400 µA, 0…10 V, 2…10 V (galvanically separated) which is analogous to the measured insulation value of the system
- Freely programmable digital inputs and outputs
- Remote setting via the Internet or Intranet (Webserver/Option: COMTRAXX® gateway)
- Worldwide remote diagnosis via the Internet (made available by Bender Service only)
- BCOM, Modbus TCP and web server.

Standards

The ISOMETER® has been developed in compliance with the following standards:

- DIN EN 61557-8 (VDE 0413-8)
- IEC 61557-8

Further information

For further information refer to our product range on www.bender.de.

Ordering information

Type		Nominal system voltage range U_n	Supply voltage U_s	Art. No.
isoNAV685-D		AC 0…690 V; 1…460 Hz DC 0…1000 V	AC 24…240 V; 50…400 Hz DC 24…240 V	B91067014

Accessories

Description	Art. No.
A set of screw-type terminals[1)]	B91067901
A set of push-wire terminals	B91067902
Enclosure accessories (terminal cover, 2 mounting clips) [1)]	B91067903

[1)] included in the scope of delivery

Suitable measuring instruments on request!

Insulation coordination according to IEC 60664-1/IEC 60664-3

Definitions:	
Measuring circuit (IC1)	(L1/+, L2, L3/-)
Supply circuit (IC2)	A1, A2
Output circuit 1 (IC3)	11, 12, 14
Output circuit 2 (IC4)	21, 22, 24
Control circuit (IC5)	(E, KE), (X1, ETH, X3)
Rated voltage	1000 V
Overvoltage category	III
Rated impulse voltage:	
IC1/(IC2-5)	8 kV
IC2/(IC3-5)	4 kV
IC3/(IC4-5)	4 kV
IC4/IC5	4 kV
Rated insulation voltage:	
IC1/(IC2-5)	1000 V
IC2/(IC3-5)	250 V
IC3/(IC4-5)	250 V
IC4/IC5	250 V
Pollution degree for accessible parts on the outside of the device housing (U_n < 690 V)	3
Pollution degree for accessible parts on the outside of the device housing (U_n >690 < 1000 V)	2
Protective separation (reinforced insulation) between:	
IC1/(IC2-5)	Overvoltage category III, 1000 V
IC2/(IC3-5)	Overvoltage category III, 300 V
IC3/(IC4-5)	Overvoltage categoryIII, 300 V
IC4/IC5	Overvoltage category III, 300 V
Voltage test (routine test) according to IEC 61010-1:	
IC2/(IC3-5)	AC 2,2 kV
IC3/(IC4-5)	AC 2,2 kV
IC4/IC5	AC 2,2 kV

Supply voltage

Supply via A1/+, A2/-:

Supply voltage range U_s	AC/DC 24…240 V
Tolerance of U_s	-30…+15 %
Maximum permissible input current of U_s	650 mA
Frequency range of U_s	DC, 50…400 Hz [1]
Tolerance of the frequency range of U_s	-5…+15 %
Power consumption, typically 50/60 Hz	≤ 12 W/21 VA
Power consumption, typically 400 Hz	≤ 12 W/45 VA

Supply via X1:

Supply voltage U_s	DC 24 V
Tolerance of U_s	DC -20…+25 %

IT system being monitored

Nominal system voltage range U_n	AC 0…690 V; DC 0…1000 V AC/DC 0…600 V (for UL applications)
Tolerance of U_n	AC/DC +15 %
Frequency range of U_n	60 Hz

Response values

Response value R_{an1} (alarm 1)	1 kΩ…10 MΩ
Response value DC residual voltage (Alarm 2) (U_{DC})	20 V…1 k V
Relative uncertainty (acc. to IEC 61557-8)	profile dependent, ±15 %, at least ±1 kΩ
Hysteresis	25 %, at least 1 kΩ

Time response

Response time t_{an} for DC residual voltage > 1,1xU_{DC} and Alarm 1	max. 150 ms [2]
Response time t_{an} at R_F = 0.5 x R_{an} (R_{an} = 10 kΩ) and C_e = 1 µF acc. to IEC 61557-8	profile dependent, typ. 4 s (see diagrams in manual)
Startup delay $T_{startup}$	0…120 s

Measuring circuit

Measuring voltage U_m	±50 V
Measuring current I_m	≤ 403 µA
Internal resistance R_i, Z_i	≥ 124 kΩ
Permissible extraneous DC voltage U_{fg}	≤ 1200 V
Permissible system leakage capacitance C_e	profile dependent, 0…150 µF

Measuring ranges

Measuring range f_n	10…460 Hz
Tolerance measurement of f_n	±1 % ±0.1 Hz
Voltage range measurement of f_n	AC 25…690 V
Measuring range U_n	AC 25…690 V
Voltage range measurement of U_n	AC/DC > 10 V
Tolerance measurement of U_n	±5 % ±5 V
Measuring range C_e	0…1000 µF
Tolerance measurement of C_e	±10 % ±10 µF
Min. insulation resistance measurement of C_e	depending on the profile and coupling mode, typ. > 10 kΩ

Display

Indication	graphic display 127 x 127 pixels, 40 x 40 mm [3]
Display range measured value	0.1 kΩ…20 MΩ
Operating uncertainty (according to IEC 61557-8)	±15 %, at least ±1 kΩ

LEDs

ON (operation LED)	green
SERVICE	yellow
ALARM 1 (Iso. Alarm 1)	yellow
ALARM 2 (Insulation fault + DC offset fault)	yellow

In-/Outputs (X1-Interface)

Cable length X1 (unshielded cable)	≤ 10 m
Cable length X1 (shielded cable, shield connected to earth (PE) on one end, recommended: J-Y(St)Y min. 2x0,8)	≤ 100 m
Total max. supply output current for each output (device supplied by X1.+/X1.GND)	max. 1 A
Total max. supply output current on X1 (device supplied by A1+/A2-)	max. 200 mA
Total max. supply output current on X1 (device supplied by A1+/A2- between 16,8 V and 40 V)	I_{LmaxX1} = 10 mA + 7 mA/V * U_s [3] (negative values are not allowed for I_{LmaxX1})

Digital Inputs (I1, I2, I3)

Number	3
Operation mode, adjustable	active high, active low
Functions	none, test, reset, device deactivated, initial measurement
Voltage:	Low DC -3…5 V, High DC 11…32 V
Tolerance Voltage	±10 %

Digital Outputs (Q1, Q2)

Number	2
Operating mode, adjustable	active, passive
Functions	none, insulation Alarm 1, insulation fault + DC residual voltage, connection fault, device fault, collective alarm, measurement ended, device inactive
Voltage	passive DC 0…32 V, active DC 0/19.2…32 V

Analogue Output (M+)

Number	1
Operating mode	linear, midscale point 28 kΩ/120 kΩ
Functions	insulation value, DC offset
Current	0…20 mA (< 600 Ω), 4…20 mA (< 600 Ω), 0…400 µA (< 4 kΩ)
Voltage	0…10 V (> 1 kΩ), 2…10 V (> 1 kΩ)
Tolerance related to the current/voltage final value	±20 %

Interfaces

Field bus:

Interface/protocol	web server/Modbus TCP/BCOM
Data rate	10/100 Mbit/s, autodetect
Max. amount Modbus requests	< 100/s
Cable length	≤ 100 m
Connection	RJ45
IP address	DHCP/manual 192.168.0.5
Network mask	255.255.255.0
BCOM address	system-1-0
Function	communication interface

Switching elements

Number of switching elements	2 changeover contacts
Operating mode	N/C operation/N/O operation
Contact 11-12-14	none, insulation Alarm 1, insulation fault + DC residual voltage, connection fault, device fault, collective alarm, measurement ended, device inactive
Contact 21-22-24	none, insulation Alarm 1, insulation fault + DC residual voltage, connection fault, device fault, collective alarm, measurement ended, device inactive
Electrical endurance under rated operating conditions, number of cycles	10.000

Contact data acc. to IEC 60947-5-1:

Utilisation category	AC-13	AC-14	DC-12	DC-12	DC-12	DC-12
Rated operational voltage	230 V	230 V	24 V	48 V	110 V	220 V
Rated operational current	5 A	3 A	1 A	1 A	0.2 A	0.1 A
Rated insulation voltage ≤ 2000 m NN						250 V
Rated insulation voltage ≤ 3000 m NN						160 V
Minimum contact rating						1 mA at AC/DC ≥ 10 V

Environment/EMC	
EMC	IEC 61326-2-4 [5]
Ambient temperatures:	
Operating temperature	-25…+55 °C
Transport	-40…+85 °C
Long-term storage	-40…+70 °C
Classification of climatic conditions acc. to IEC 60721 (related to temperature and relative humidity)**:**	
Stationary use (IEC 60721-3-3)	3K22
Transport (IEC 60721-3-2)	2K11
Long-term storage (IEC 60721-3-1)	1K22
Classification of mechanical conditions acc. to IEC 60721:	
Stationary use (IEC 60721-3-3)	3M11
Transport (IEC 60721-3-2)	2M4
Long-term storage (IEC 60721-3-1)	1M12
Area of application	≤ 3000 m NN

Connection	
Connection type	pluggable screw-type terminal or push-wire terminal
Screw-type terminals:	
Nominal current	≤ 10 A
Tightening torque	0.5…0.6 Nm (5…7 lb-in)
Conductor sizes	AWG 24-12
Stripping length	7 mm
rigid/flexible	0.2…2.5 mm²
flexible with ferrules, with/without plastic sleeve	0.25…2.5 mm²
Multiple conductor, rigid	0.2…1 mm²
Multiple conductor, flexible	0.2…1.5 mm²
Multiple conductor, flexible with ferrule without plastic sleeve	0.25…1 mm²
Multiple conductor, flexible with TWIN ferrule with plastic sleeve	0.5…1.5 mm²
Push-wire terminals:	
Nominal current	≤ 10 A
Conductor sizes	AWG 24-12
Stripping length	10 mm
rigid/flexible	0.2…2.5 mm²
flexible with ferrules, with/without plastic sleeve	0.25…2.5 mm²
Multiple conductor, flexible with TWIN ferrule with plastic sleeve	0.5…1.5 mm²

Push-wire terminals X1:	
Nominal current	≤ 8 A
Conductor sizes	AWG 24-16
Stripping length	10 mm
rigid/flexible	0.2…1.5 mm²
flexible with ferrule without plastic sleeve	0.25…1.5 mm²
flexible with TWIN ferrule with plastic sleeve	0.25…0.75 mm²

Other	
Operating mode	continuous operation
Mounting (0°)	display oriented, cooling slots must be ventilated vertically [6]
Degree of protection internal components	IP40
Degree of protection terminals	IP20
DIN rail mounting acc. to	IEC 60715
Screw fixing	3 x M4 with mounting clip
Enclosure material	polycarbonate
Flammability class	V-0
ANSI code	64
Dimensions (W x H x D)	108 x 93 x 110 mm
Documentation number	D00215
Weight	< 390 g

1) At a frequency > 200 Hz, the connection of X1 must be insulated. Only permanently installed devices which at least have overvoltage category CAT2 (300V) may be connected.

2) Fast tripping only works in IT networks with a mains frequency of 60 Hz.

3) Indication limited outside the temperature range -25…+55 °C.

4) U_s [Volt] = supply voltage ISOMETER®

5) This is a class A product. In a domestic environment, this product may cause radio interference. In this case, the user may be required to take corrective actions.

6) Recommendation: Devices mounted at 0 ° (display-oriented, cooling slots must be ventilated vertically).

For devices mounted at an angle of 45°, the max. working temperature is reduced by 10 °C.
For devices mounted at an angle of 90°, the max. working temperature is reduced by 20 °C.

Dimension diagram (dimensions in mm)

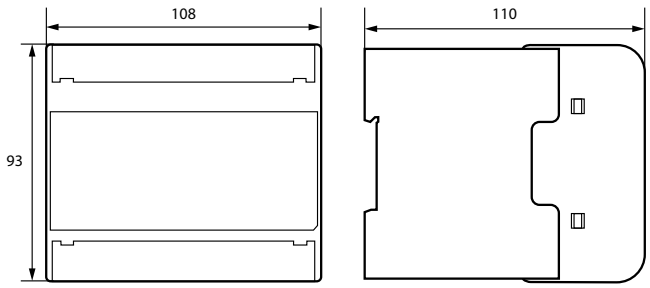

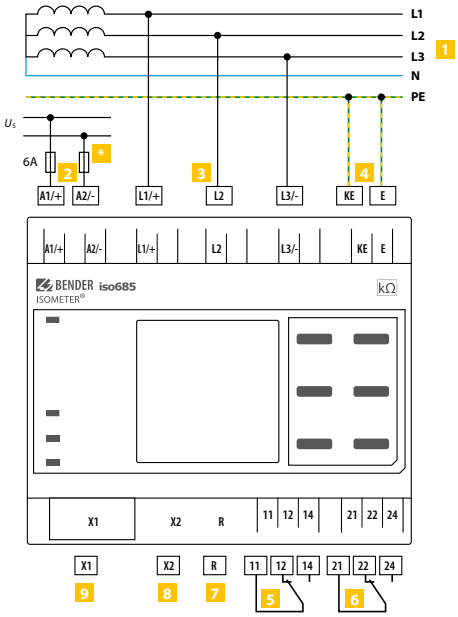

1 Connection to a 3(N)AC system

2 Supply voltage U_S (see nameplate) via 6 A fuse

3 Connection to the IT system to be monitored (L1/+, L2, L3/-)

4 Separate connection of KE, E to PE

5 (K1) Alarm relay 1, available changeover contacts

6 (K2) Alarm relay 2, available changeover contacts

7 Switchable resistor R for RS-485 bus termination

8 Ethernet interface

9 Digital interface

* 6 A fuse for systems > 690 V

NOTE:

According to DIN VDE 0100-430, devices for protection against a short circuit can be omitted for the coupling of terminals L1/+and L3/- to the IT system ≤ 690 V to be monitored if the wiring is carried out in such a manner as to reduce the risk of a short circuit to a minimum. (Recommendation: Ensure short-circuit-proof and earth-fault-proof wiring).

The connecting lines L1/+, L2, L3/- to the system to be monitored must be carried out as spur lines. No load current may be conducted through the terminals.

For UL applications:

Use 60/70 °C copper lines only!
UL and CSA application require the supply voltage to be protected via 5 A fuses.

Digital interface X1

Digital interface	Terminal	Colour
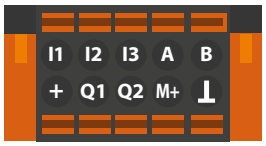 X1	I1	Input 1
	I2	Input 2
	I3	Input 3
	A	RS-485 A
	B	RS-485 B
	+	+24 V
	Q1	Output 1
	Q2	Output 2
	M+	Analogue output
	⊥	Ground

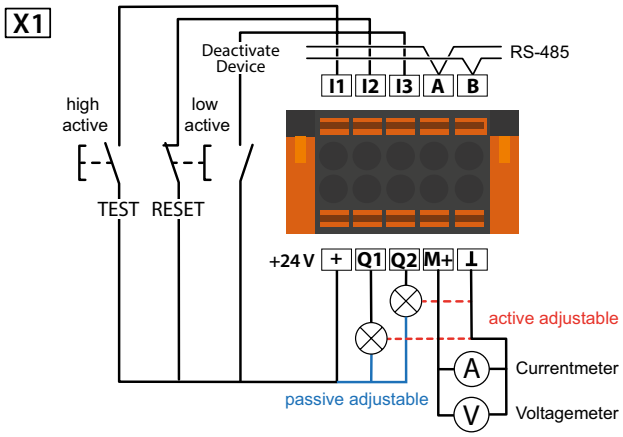

Connection to X1

CAUTION

Danger of damage to property due to faulty connections!

The device can be damaged if the unit is simultaneously connected to the supply voltage via the X1 interface, and A1/+and A2/- terminals. Do not connect the device simultaneously via X1, and A1/+and A2/-to different supply voltages.

CAUTION

Danger of damage to property due to incorrect nominal voltage!

When the device is powered via the X1 interface, the nominal voltage must be 24 V otherwise the unit may be damaged. Only connect a nominal voltage of 24 V to the X1 interface.

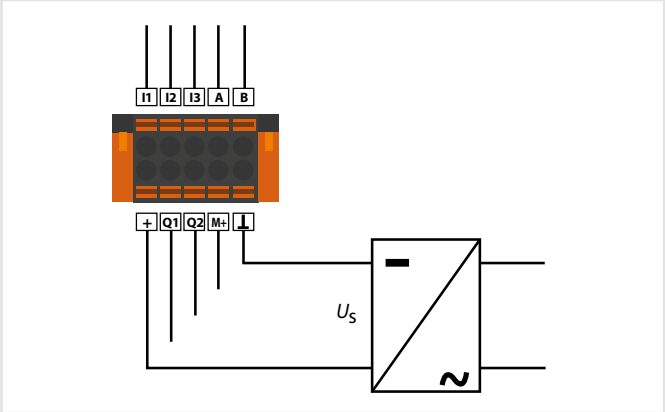

ISOMETER® isoNAV685-D-B

Insulation monitoring device for offline monitoring of de-energised loads

AC/DC

Typical applications

- Monitoring of de-energised loads and systems

Approvals

Device features

- ISOMETER® to monitor the insulation resistance in de-energised systems
- Automatic adaptation to the existing system leakage capacitance
- ***AMP**Plus* measurement method
- An adjustable response value in the range 10 kΩ…1 MΩ (factory setting = 50 kΩ)
- High-resolution graphic LC display for excellent readability and recording of the device status
- Earth connection monitoring
- Automatic device self test
- Graphical representation of the insulation resistance over time (isoGraph)
- History memory with real-time clock (buffer for three days) for storing 1023 alarm messages with date and time
- Freely programmable digital inputs and outputs.
- Remote setting via the Internet or Intranet (Webserver/Option: COMTRAXX® Gateway).
- Worldwide remote diagnosis via the Internet.
- BCOM, Modbus TCP and web server.

Standards

The ISOMETER® has been developed in compliance with the following standards:

- DIN EN 61557-8 (VDE 0413-8)
- IEC 61557-8

Further information

For further information refer to our product range on www.bender.de.

Ordering information

Type		Nominal system voltage range U_n	Supply voltage U_s	Art. No.
isoNAV685-D-B		offline	AC 24…240 V; 50…400 Hz DC 24…240 V	B91067024

Accessories

Description	Art. No.
A set of screw-type terminals[1)]	B91067901
A set of push-wire terminals	B91067902
Enclosure accessories (terminal cover, 2 mounting clips) [1)]	B91067903

[1)] included in the scope of delivery

Suitable measuring instruments on request!

Insulation coordination according to IEC 60664-1/IEC 60664-3

Definitions:	
Measuring circuit (IC1)	(L1/+, L2, L3/-)
Supply circuit (IC2)	A1, A2
Output circuit 1 (IC3)	11, 12, 14
Output circuit 2 (IC4)	21, 22, 24
Control circuit (IC5)	(E, KE), (X1, ETH, X3, X4)
Rated voltage	1000 V
Overvoltage category	III
Rated impulse voltage:	
IC1/(IC2-5)	8 kV
IC2/(IC3-5)	4 kV
IC3/(IC4-5)	4 kV
IC4/IC5	4 kV
Rated insulation voltage:	
IC1/(IC2-5)	1000 V
IC2/(IC3-5)	250 V
IC3/(IC4-5)	250 V
IC4/IC5	250 V
Pollution degree for accessible parts on the outside of the device housing (U_n < 690 V)	3
Pollution degree for accessible parts on the outside of the device housing (U_n >690 < 1000 V)	2
Protective separation (reinforced insulation) between:	
IC1/(IC2-5)	Overvoltage category III, 1000 V
IC2/(IC3-5)	Overvoltage category III, 300 V
IC3/(IC4-5)	Overvoltage categoryIII, 300 V
IC4/IC5	Overvoltage category III, 300 V
Voltage test (routine test) according to IEC 61010-1:	
IC2/(IC3-5)	AC 2,2 kV
IC3/(IC4-5)	AC 2,2 kV
IC4/IC5	AC 2,2 kV

Supply voltage

Supply via A1/+, A2/-:	
Supply voltage range U_s	AC/DC 24…240 V
Tolerance of U_s	-30…+15%
Maximum permissible input current of U_s	650 mA
Frequency range of U_s	DC, 50…400 Hz [1]
Tolerance of the frequency range of U_s	-5…+15 %
Power consumption, DC	≤ 12 W
Power consumption, typically 50/60 Hz	≤ 12 W/21 VA
Power consumption, typically 400 Hz	≤ 12 W/45 VA
Supply via X1:	
Supply voltage U_s	DC 24 V
Tolerance of U_s	DC -20…+25 %

IT system being monitored

Nominal system voltage range U_n	offline
Circuit capacity internal mains switch	AC 0…690 V; DC 0…1000 V AC/DC 0…600 V (for UL applications)

Response values

Response value R_{an1} (alarm 1)	1 kΩ…10 MΩ
Response value R_{an2} (alarm 2)	1 kΩ…10 MΩ
Hysteresis	25 %, at least 1 kΩ

Time response

Response time t_{an} at $R_F = 0.5 \times R_{an}$ (R_{an} = 10 kΩ) and C_e = 1 µF according to IEC 61557-8	30 s
Start-up delay $T_{start\text{-}up}$	0…120 s

Measuring circuit

Measuring voltage U_m	±5 V
Measuring current I_m	≤ 13,4 µA
Internal resistance R_i, Z_i	≥ 372 kΩ
Permissible extraneous DC voltage U_{fg}	≤ 1200 V
Permissible system leakage capacitance C_e	150 µF

Display

Indication	graphic display 127 x 127 pixels, 40 x 40 mm [2]
Display range measured value	0.1 kΩ…20 MΩ
Operating uncertainty (according to IEC 61557-8)	±15 %, at least ±1 kΩ

LEDs

ON (operation LED)	green
SERVICE	yellow
ALARM 1 (L1 and L2)	yellow
ALARM 2 (L3)	yellow

In-/Outputs (X1-Interface)

Cable length X1 (unshielded cable)	≤ 10 m
Cable length X1 (shielded cable, shield connected to earth (PE) on one end, recommended: J-Y(St)Y min. 2x0,8)	≤ 100 m
Total max. supply output current for each output (device supplied by X1.+/X1.GND)	max. 1 A
Total max. supply output current on X1 (device supplied by A1+/A2-)	max. 200 mA
Total max. supply output current on X1 (device supplied by A1+/A2- between 16,8 V and 40 V)	I_{LmaxX1} = 10 mA + 7 mA/V * U_s [3] (negative values are not allowed for I_{LmaxX1})

Digital Inputs (I1, I2, I3)

Number	3
Operating mode, adjustable	active high, active low
Functions	none, test, reset, device deactivated
Voltage:	Low DC -3…5 V, High DC 11…32 V
Tolerance Voltage	±10 %

Digital Outputs (Q1, Q2)

Number	2
Operating mode, adjustable	active, passive
Functions	off, connection fault, Alarm L1, Alarm L2, Alarm L3, device fault, common alarm
Voltage	passive DC 0…32 V, active DC 0/19.2…32 V

Interfaces

Field bus:	
Interface/protocol	web server/Modbus TCP/BCOM
Data rate	10/100 Mbit/s, autodetect
Max. amount Modbus requests	< 100/s
Cable length	≤ 100 m
Connection	RJ45
IP address	DHCP/manual 192.168.0.5
Network mask	255.255.255.0
BCOM address	system-1-0
Function	communication interface

Switching elements

Number of switching elements	2 changeover contacts
Operating mode	N/C operation/N/O operation
Contact 11-12-14/21-22-24	off, connection fault, Alarm L1, Alarm L2, Alarm L3, device fault, common alarm
Electrical endurance under rated operating conditions, number of cycles	10.000

Contact data acc. to IEC 60947-5-1:

Utilisation category	AC-13	AC-14	DC-12	DC-12	DC-12	DC-12
Rated operational voltage	230 V	230 V	24 V	48 V	110 V	220 V
Rated operational current	5 A	3 A	1 A	1 A	0.2 A	0.1 A
Rated insulation voltage ≤ 2000 m NN						250 V
Rated insulation voltage ≤ 3000 m NN						160 V
Minimum contact rating						1 mA at AC/DC ≥ 10 V

Environment/EMC

EMC	IEC 61326-2-4 [4]
Ambient temperatures:	
Operating temperature	-25…+55 °C
Transport	-40…+85 °C
Long-term storage	-40…+70 °C

Classification of climatic conditions acc. to IEC 60721 (related to temperature and relative humidity)**:**

Stationary use (IEC 60721-3-3)	3K22
Transport (IEC 60721-3-2)	2K11
Long-term storage (IEC 60721-3-1)	1K22

Classification of mechanical conditions acc. to IEC 60721:

Stationary use (IEC 60721-3-3)	3M11
Transport (IEC 60721-3-2)	2M4
Long-term storage (IEC 60721-3-1)	1M12
Area of application	≤ 3000 m NN

Technical data (continued)

Connection	
Connection type	pluggable screw-type terminal or push-wire terminal
Screw-type terminals:	
Nominal current	≤ 10 A
Tightening torque	0.5…0.6 Nm (5…7 lb-in)
Conductor sizes	AWG 24-12
Stripping length	7 mm
rigid/flexible	0.2…2.5 mm²
flexible with ferrules, with/without plastic sleeve	0.25…2.5 mm²
Multiple conductor, rigid	0.2…1 mm²
Multiple conductor, flexible	0.2…1.5 mm²
Multiple conductor, flexible with ferrule without plastic sleeve	0.25…1 mm²
Multiple conductor, flexible with TWIN ferrule with plastic sleeve	0.5…1.5 mm²
Push-wire terminals:	
Nominal current	≤ 10 A
Conductor sizes	AWG 24-12
Stripping length	10 mm
rigid/flexible	0.2…2.5 mm²
flexible with ferrules, with/without plastic sleeve	0.25…2.5 mm²
Multiple conductor, flexible with TWIN ferrule with plastic sleeve	0.5…1.5 mm²
Push-wire terminals X1:	
Nominal current	≤ 8 A
Conductor sizes	AWG 24-16
Stripping length	10 mm
rigid/flexible	0.2…1.5 mm²
flexible with ferrule without plastic sleeve	0.25…1.5 mm²
flexible with TWIN ferrule with plastic sleeve	0.25…0.75 mm²

Other	
Operating mode	continuous operation
Mounting (0°)	display oriented, cooling slots must be ventilated vertically [5]
Degree of protection internal components	IP40
Degree of protection terminals	IP20
DIN rail mounting acc. to	IEC 60715
Screw fixing	3 x M4 with mounting clip
Enclosure material	polycarbonate
Flammability class	V-0
ANSI code	64
Dimensions (W x H x D)	108 x 93 x 110 mm
Documentation number	D00264
Weight	< 390 g

[1] At a frequency > 200 Hz, the connection of X1 must be insulated. Only permanently installed devices which at least have overvoltage category CAT2 (300V) may be connected.

[2] Indication limited outside the temperature range -25…+55 °C.

[3] U_s [Volt] = supply voltage ISOMETER®

[4] This is a class A product. In a domestic environment, this product may cause radio interference. In this case, the user may be required to take corrective actions.

[5] Recommendation: Devices mounted at 0 ° (display-oriented, cooling slots must be ventilated vertically).

For devices mounted at an angle of 45°, the max. working temperature is reduced by 10 °C.
For devices mounted at an angle of 90°, the max. working temperature is reduced by 20 °C.

Dimension diagram (dimensions in mm)

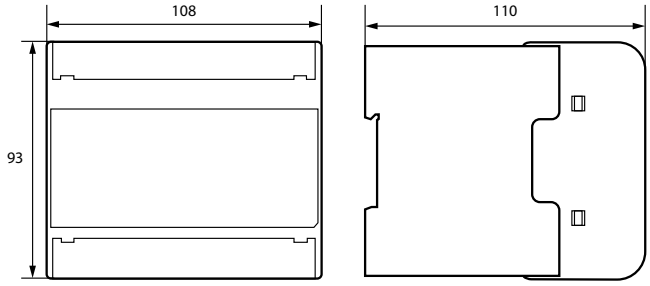

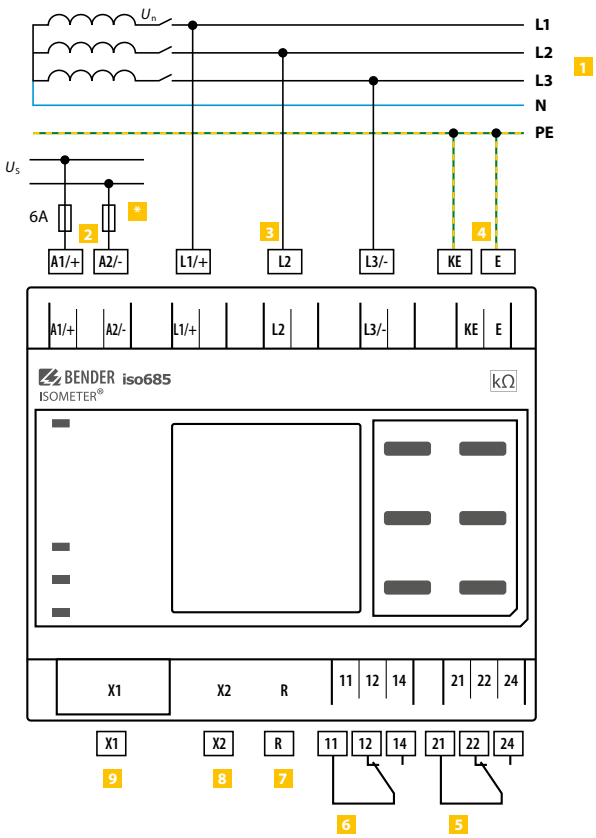

1 Connection to a 3(N)AC system
2 Supply voltage U_S (see nameplate) via 6 A fuse
3 Connection to the IT system to be monitored (L1/+, L2, L3/-)
4 Separate connection of KE, E to PE
5 (K1) Alarm relay 1, available changeover contacts
6 (K2) Alarm relay 2, available changeover contacts
7 Switchable resistor R for RS-485 bus termination
8 Ethernet interface
9 Digital interface
* 6 A fuse for systems > 690 V

NOTE:

According to DIN VDE 0100-430, devices for protection against a short circuit can be omitted for the coupling of terminals L1/+and L3/- to the IT system ≤ 690 V to be monitored if the wiring is carried out in such a manner as to reduce the risk of a short circuit to a minimum. (Recommendation: Ensure short-circuit-proof and earth-fault-proof wiring).

The connecting lines L1/+, L2, L3/- to the system to be monitored must be carried out as spur lines. No load current may be conducted through the terminals.

For UL applications:

Use 60/70 °C copper lines only!
UL and CSA application require the supply voltage to be protected via 5 A fuses.

Anschluss an einen Frequenzumrichter zur Überwachung im abgeschalteten Zustand (Offline)

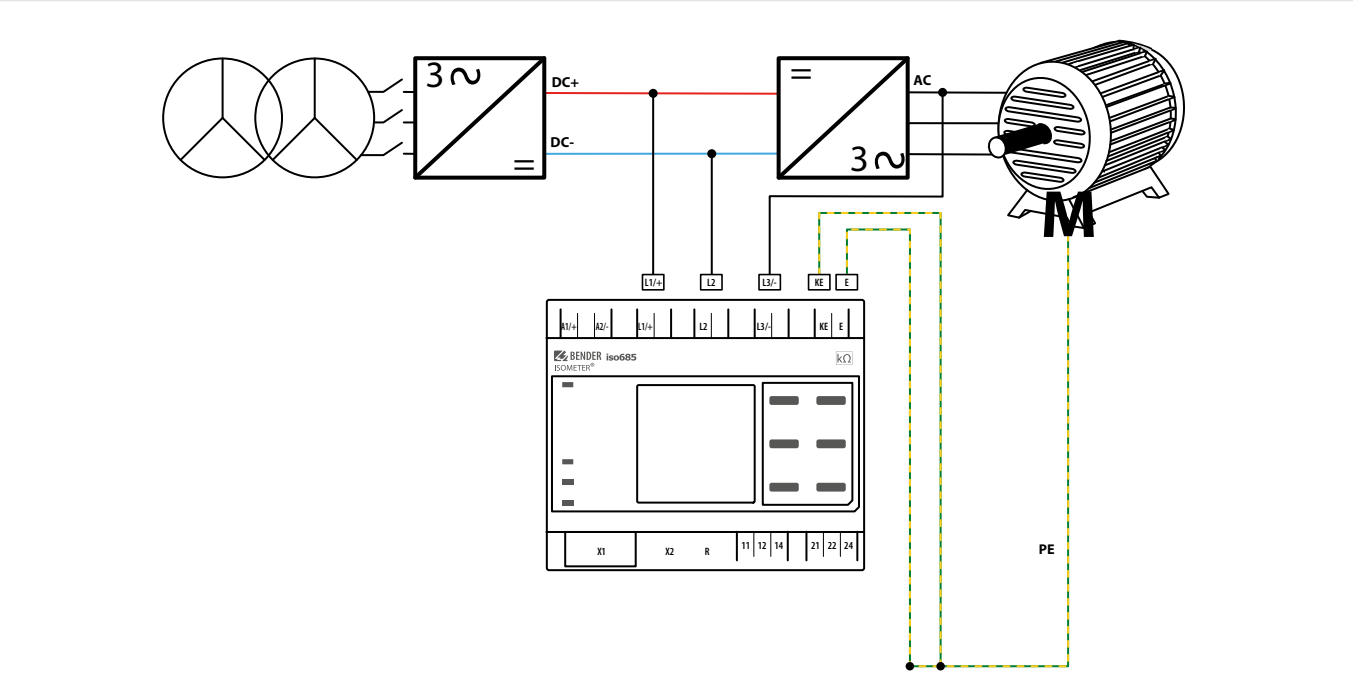

Digital interface X1

Digital interface	Terminal	Colour
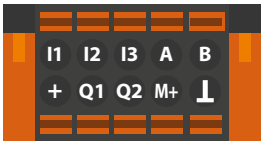 X1	I1	Input 1
	I2	Input 2
	I3	Input 3
	A	RS-485 A
	B	RS-485 B
	+	+24 V
	Q1	Output 1
	Q2	Output 2
	M+	Analogue output
	⊥	Ground

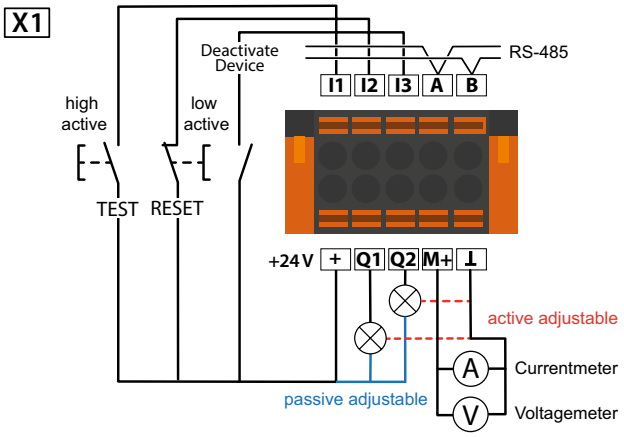

Connection to X1

CAUTION

Danger of damage to property due to faulty connections!

The device can be damaged if the unit is simultaneously connected to the supply voltage via the X1 interface, and A1/+and A2/- terminals. Do not connect the device simultaneously via X1, and A1/+and A2/-to different supply voltages.

CAUTION

Danger of damage to property due to incorrect nominal voltage!

When the device is powered via the X1 interface, the nominal voltage must be 24 V otherwise the unit may be damaged. Only connect a nominal voltage of 24 V to the X1 interface.

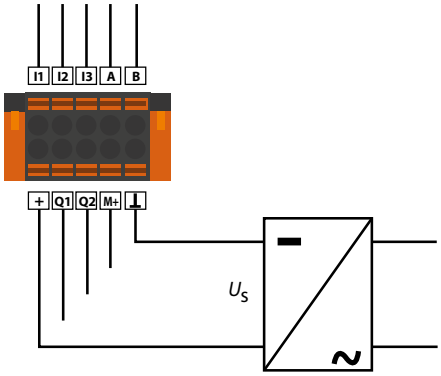

ISOMETER® isoHR685W-x-I-B

Insulation monitoring device for IT AC systems with galvanically connected rectifiers and inverters and for IT DC systems

AC/DC

Typical applications

- AC, DC or AC/DC main circuits
- AC/DC main circuits with directly connected DC components, such as rectifiers, converters, variable-speed drives
- UPS systems, battery systems
- Heaters with phase control
- Systems including switch-mode power supplies
- coupled IT systems with high leakage capacitances
- Monitoring of long capacitive coupled lines

Approvals

Device features

- ISOMETER® for IT AC systems with galvanically connected rectifiers or inverters and for IT DC systems (IT = unearthed systems)
- Automatic adaptation to the existing system leakage capacitance
- Combination of ***AMP***^{Plus} and other profile-specific measurement methods
- Two separately adjustable response value ranges of 1 kΩ…3 GΩ
- High-resolution graphic LC display
- Connection monitoring (monitoring of the measuring lines)
- Automatic device self test
- Graphical representation of the insulation resistance over time (isoGraph)
- History memory with real-time clock (buffer for three days) for storing 1023 alarm messages with date and time
- Current or voltage output 0(4)…20 mA, 0…400 µA, 0…10 V, 2…10 V (galvanically separated), which is analogous to the measured insulation value of the system
- Freely programmable digital inputs and outputs
- Remote setting via the Internet or Intranet (Webserver/Option: COMTRAXX® gateway).
- Remote diagnosis via the Internet (made available by Bender Service only)
- isoData: Continuous uninterrupted data transmission
- isoSync: Timely synchronization of measurement processes
- RS-485/BS (Bender sensor bus) for data exchange with other Bender devices via Modbus RTU protocol
- BCOM, Modbus TCP und web server
- ISOnet: Internal separation of the ISOMETER® from the IT system to be monitored (e.g. if several IT systems are interconnected)
- ISOnet priority: Permanent priority of a device within the network
- ISOloop: Special function for ring systems (all systems are coupled)

Device variants

- **isoHR685W–D–I–B**
  The device version isoHR685W-D-I-B features a high-resolution graphical LC display and control elements for direct operation of the device functions. It **cannot** be combined with an FP200.
- **isoHR685W–S–I–B**
  The isoHR685W–S–I–B device contains **no display** and **no operating unit**. It can **only be used in combination with FP200W** and is indirectly operated via this front panel.

Standards

The ISOMETER® has been developed in compliance with the following standards:

- DIN EN 61557-8 (VDE 0413-8)
- IEC 61557-8

Further information

For further information refer to our product range on www.bender.de.

Ordering information

Type		Nominal system voltage range U_n	Supply voltage U_s	Display	Art. No.
isoHR685W–D–I–B		AC 0…1000 V; 0.1…460 Hz DC 0…1300 V	AC 24…240 V; 50…400 Hz DC 24…240 V	integrated	B91067025W
isoHR685W–S–I–B + FP200W [1]				detached	B91067225W

[1] nur in Kombination erhältlich

Accessories

Description	Art. No.
A set of screw terminals[1)]	B91067901
A set of push-wire terminals	B91067902
Enclosure accessories (terminal cover, 2 mounting clips) [1)]	B91067903
BB bus 6TE connector	B98110001

[1)] included in the scope of delivery

Suitable system components

Description	Type	Art. No.	Page
Device version without display	isoHR685W-S-I-B	B91067125W	–
Display for front panel mounting	FP200W	B91067904W	**49**
Coupling devices	AGH150W-4	B98018006	**363**
	AGH204S-4	B914013	**365**
	AGH520S	B913033	**366**
	AGH676S-4	B913055	**369**

Suitable measuring instruments on request!

Technical data

Insulation coordination acc. to IEC 60664-1/IEC 60664-3

Definitions:	
Measuring circuit (IC1)	L1/+, L2, L3/-
Supply circuit (IC2)	A1, A2
Output circuit 1 (IC3)	11, 12, 14
Output circuit 2 (IC4)	21, 22, 24
Control circuit (IC5)	(E, KE), (X1, ETH, X3, X4)
Rated voltage	1300 V
Overvoltage category	II
Rated impulse voltage:	
IC1/(IC2-5)	8 kV
IC2/(IC3-5)	4 kV
IC3/(IC4-5)	4 kV
IC4/IC5	4 kV
Rated insulation voltage:	
IC1/(IC2-5)	1000 V
IC2/(IC3-5)	300 V
IC3/(IC4-5)	300 V
IC4/IC5	300 V
Pollution degree outside (U_n < 690 V)	3
Pollution degree outside (U_n >690 < 1000 V)	2
Safe isolation (reinforced insulation) between:	
IC1/(IC2-5)	Overvoltage category III, 1000 V Overvoltage category II, 1300 V
IC2/(IC3-5)	Overvoltage category III, 300 V
IC3/(IC4-5)	Overvoltage category III, 300 V
IC4/IC5	overvoltage category III, 300 V
Voltage tests (routine test) acc. to IEC 61010-1	
IC2/(IC3-5)	AC 2.2 kV
IC3/(IC4-5)	AC 2.2 kV
IC4/IC5	AC 2.2 kV

Supply voltage

Supply via A1/+, A2/-:

Supply voltage range U_s	AC/DC 24…240 V
Tolerance of U_s	-30…+15 %
Maximum permissible input current of U_s	650 mA
Frequency range of U_s	DC, 50…400 Hz[1)]
Tolerance of the frequency range of U_s	-5…+15 %
Power consumption, typically DC	≤ 12 W
Power consumption, typically 50/60 Hz	≤ 12 W/21 VA
Power consumption, typically 400 Hz	≤ 12 W/45 VA

Supply via X1:

Supply voltage U_s	DC 24 V
Tolerance of U_s	DC -20…+25 %

IT system being monitored

Nominal system voltage range U_n	AC 0…1000 V, 3AC 0…690 V, DC 0…1300 V AC/DC 0…1000 V (for UL applications)
Tolerance of U_n	AC/DC +15 %
Frequency range of U_n	DC 0.1…460 Hz
Max. AC voltage $U_{\sim}$ in the frequency range f_n = 0.1… 4 Hz	$U_{\sim\,max} = 50\ V/Hz^2 * (1 + f_n^2)$

Response values

Response value R_{an1} (Alarm 1)	1 kΩ…3 GΩ
Response value R_{an2} (Alarm 2)	1 kΩ…3 GΩ
Relative uncertainty (acc. to IEC 61557-8)	dependent on the profile, ±15 %, at least ±1 kΩ
Hysteresis	25 %, at least 1 kΩ

Time response

Response time t_{an} at R_F = 0.5 x R_{an} (R_{an} = 10 kΩ) and C_e = 1 µF according to IEC 61557-8	profile dependent, typ. 10 s (see diagrams in manual)
Response time DC Alarm at C_e = 1 µF	profile dependent, typ. 5 s (see diagram in manual)
Start-up delay $T_{start\text{-}up}$	0…120 s

Measuring circuit

Measuring voltage U_m	profile dependent, ±10 V, ±50 V (see profile overview)
Measuring current I_m	≤ 403 µA
Internal resistance R_i, Z_i	≥ 124 kΩ
Internal resistance on decoupled systems (inactive by I/O, inactive by ISOnet or cut-off)	typ. 50 MΩ
Permissible extraneous DC voltage U_{fg}	≤ 1500 V
Permissible system leakage capacitance C_e	profile dependent, 0…1000 µF

Measuring ranges

Measuring range f_n	0.1…460 Hz
Tolerance measurement of f_n	±1 % ±0.1 Hz
Voltage range measurement of f_n	AC 25…690 V
Measuring range U_n(without an external coupling device)	AC 25…1000 V; 3AC 25…690 V; DC 0…1300 V
Voltage range measurement of U_n	AC/DC 10…1000 V [7)]
Tolerance measurement of U_n	±5 % ±5 V
Measuring range C_e	0…1000 µF
Tolerance measurement of C_e	±10 % ±10 µF
Frequency range measurement of C_e	DC, 30…460 Hz
Min. insulation resistance measurement of C_e	depending on the profile and coupling mode, typ. > 10 kΩ

Display

Indication	graphic display 127 x 127 pixels, 40 x 40 mm [2)]
Display range measured value	0.1 kΩ…10 GΩ
Operating uncertainty (according to IEC 61557-8)	±15 %, at least ±1 kΩ

LEDs

ON (operation LED)	green
SERVICE	yellow
ALARM 1	yellow
ALARM 2	yellow

In-/Outputs (X1-Interface)

Cable length X1 (unshielded cable)	≤ 10 m
Cable length X1 (shielded cable, shield connected to earth PE on one side J-Y(St)Y min. 2x0,8)	≤ 100 m
Total max. supply output current via X1.+/X1.GND for each output	max. 1 A
Total max. supply output current via A1/A2 in total on X1	max. 200 mA
Total max. supply output current via A1/A2 in total on X1 between 16.8 V and 40 V	I_{LmaxX1} = 10 mA + 7 mA/V * U_s [3)] (negative values are not allowed for I_{LmaxX1})

Digital inputs (I1, I2, I3)

Number	3
Operating mode, adjustable	active high, active low
Functions	off, test, reset, deactivate device, start initial measurement
Voltage	Low DC -3…5 V, High DC 11…32 V
Voltage tolerance	± 10 %

Digital outputs (Q1, Q2)

Number	2
Operating mode, adjustable	active, passive
Functions	off, Ins. alarm 1, Ins. Alarm 2, connection fault, DC- alarm [4)], DC+ alarm [4)], symmetrical alarm, device fault, common alarm, measurement complete, device inactive, DC offset alarm
Voltage passive	DC 0…32 V, active DC 0/19.2…32 V

Analogue output (M+)

Number	1
Operating mode	linear, midscale point 28 kΩ/120 kΩ
Functions	insulation value, DC shift
Current	0…20 mA (< 600 Ω), 4…20 mA (< 600 Ω), 0…400 µA (< 4 kΩ)
Voltage	0…10 V (>1 kΩ), 2…10 V (>1 kΩ)
Tolerance related to the current/voltage final value	± 20 %

Interfaces

Field bus:	
Interface/protocol	web server/Modbus TCP/BCOM
Data rate	10/100 Mbit/s, autodetect
Max. number of Modbus requests	<100/s
Cable length	≤ 100 m
Connection	RJ45
IP address	DHCP/manual* 192.168.0.5*
Network mask	255.255.255.0*
BCOM address	system-1-0
Function	communication interface
ISOnet	
Number of ISOnet devices	2…20 dev
Max. nominal system voltage ISOnet	AC, 690 V/DC, 1000V
ISOloop	
Number of ISOloop devices	2…20 dev
ISOsync:	
Number of ISOsync devices	≤ 50
Sensor bus:	
Interface/Protocol	RS-485/BB bus
Data rate mode 1	9.6 kBaud/s
Cable length (depending on the baud rate)	≤1200 m
Cable: twisted pair, one end of shield connected to PE	recommended: J-Y(St)Y min. 2x0.8
Connection	terminals X1.A, X1.B
Terminating resistor	120 Ω, can be connected internally
Device address	1…90

Switching elements

Number of switching elements	2 changeover contacts
Operating mode	N/C operation/N/O operation
Contact 11-12-14/21-22-24	off, Ins. alarm 1, Ins. Alarm 2, connection fault, DC- alarm [4], DC+ alarm [4], symmetrical alarm, device fault, common alarm, measurement complete, device inactive, DC offset alarm
Electrical endurance under rated operating conditions, number of cycles	10,000
Contact data acc. to IEC 60947-5-1:	
Utilisation category	AC-13 / AC-14 / DC-12 / DC-12 / DC-12 / DC-12
Rated operational voltage	230 V / 230 V / 24 V / 48 V / 110 V / 220 V
Rated operational current	5 A / 3 A / 1 A / 1 A / 0.2 A / 0.1 A
Rated insulation voltage ≤ 2000 m NN	250 V
Rated insulation voltage ≤ 3000 m NN	160 V
Minimum contact rating	1 mA at AC/DC ≥ 10 V

Environment/EMC and temperature range

EMC	IEC 60533, IEC 61326-2-4 [5]
Operating temperature	-25…+55 °C
Transport	-40…+85 °C
Long-term storage	-40…+70 °C
Classification of climatic conditions acc. to IEC 60721 (related to temperature and relative humidity)**:**	
Stationary use (IEC 60721-3-3)	3K22
Transport (IEC 60721-3-2)	2K11
Long-term storage (IEC 60721-3-1)	1K22
Classification of mechanical conditions acc. to IEC 60721:	
Stationary use (IEC 60721-3-3)	3M12
Transport (IEC 60721-3-2)	2M4
Long-term storage (IEC 60721-3-1)	1M12
Area of application	≤3000 m NN

Connection

Connection type	pluggable screw terminal or push-wire terminal
Screw-type terminals:	
Nominal current	≤ 10 A
Tightening torque	0.5…0.6 Nm (5…7 lb-in)
Conductor sizes	AWG 24-12
Stripping length	7 mm
rigid/flexible	0.2…2.5 mm²
flexible with ferrules, with/without plastic collar	0.25…2.5 mm²
Multiple conductor, rigid	0.2…1 mm²
Multiple conductor, flexible	0.2…1.5 mm²
Multiple conductor, flexible with ferrule without plastic sleeve	0.25…1 mm²
Multiple conductor, flexible withTWIN ferrule with plastic sleeve	0.5…1.5 mm²
Push-wire terminals:	
Nominal current	≤ 10 A
Conductor sizes	AWG 24-12
Stripping length	10 mm
rigid/flexible	0.2…2.5 mm²
flexible with ferrules, with/without plastic collar	0.25…2.5 mm²
Multiple conductor, flexible withTWIN ferrule with plastic sleeve	0.5…1.5 mm²
Push-wire terminals X1:	
Nominal current	≤ 8 A
Conductor sizes	AWG 24-16
Stripping length	10 mm
rigid/flexible	0.2…1.5 mm²
flexible with ferrule without plastic sleeve	0.25…1.5 mm²
flexible with ferrule with plastic sleeve	0.25…0.75 mm²

Other

Operating mode	continuous operation
Mounting (0°)	display oriented, cooling slots must be ventilated vertically [6]
Degree of protection internal components	IP40
Degree of protection terminals	IP20
DIN rail mounting acc. to	IEC 60715
Screw fixing	3 x M4 with mounting clip
Enclosure material	polycarbonate
Flammability class	V-0
ANSI code	64
Dimensions (W x H x D)	108 x 93 x 110 mm
Documentation number	D00261
Weight	< 390 g

1) At a frequency > 200 Hz, the connection of X1 and remote must be insulated. Only permanently installed devices which at least have overvoltage category CAT2 (300 V) may be connected.

2) Indication limited outside the temperature range -25…+55 °C.

3) U_s [Volt] = supply voltage ISOMETER®

4) Only for U_n ≥ 50 V.

5) This is a class A product. In a domestic environment, this product may cause radio interference. In this case, the user may be required to take corrective actions.

6) Recommendation: Mounting position 0° (display-oriented, cooling slots must be ventilated vertically). At mounting position 45°, the max. operating temperature is reduced by 10 °C. At mounting position 90°, the max. operating temperature is reduced by 20 °C.

7) Deactivation of voltage metering in a DC system at U_n > DC 1000 V and asymmetric insulation fault at R_f < 500 kΩ. Reactivation of voltage metering if R_f > 500 kΩ.

"W" option data deviating from the standard version

Devices with the suffix "W" feature increased shock and vibration resistance. The electronics is covered with a special varnish to provide increased protection against mechanical stress and moisture.

Rated operational current switching elements	max. 3

Dimension diagram (dimensions in mm)

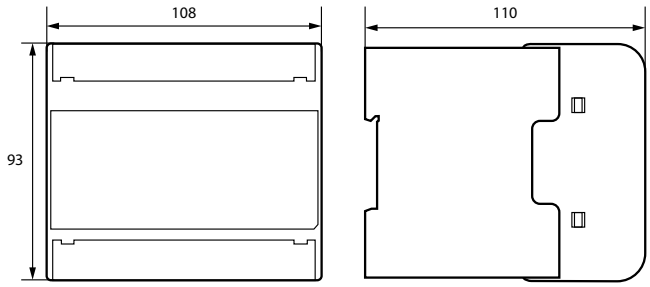

Connection to FP200

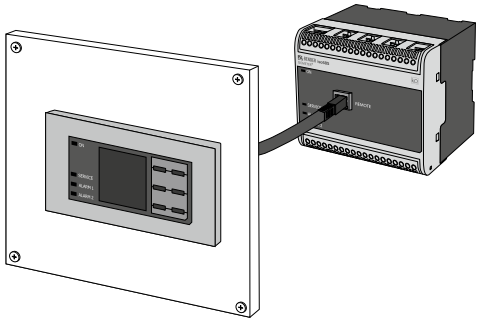

Wiring diagram

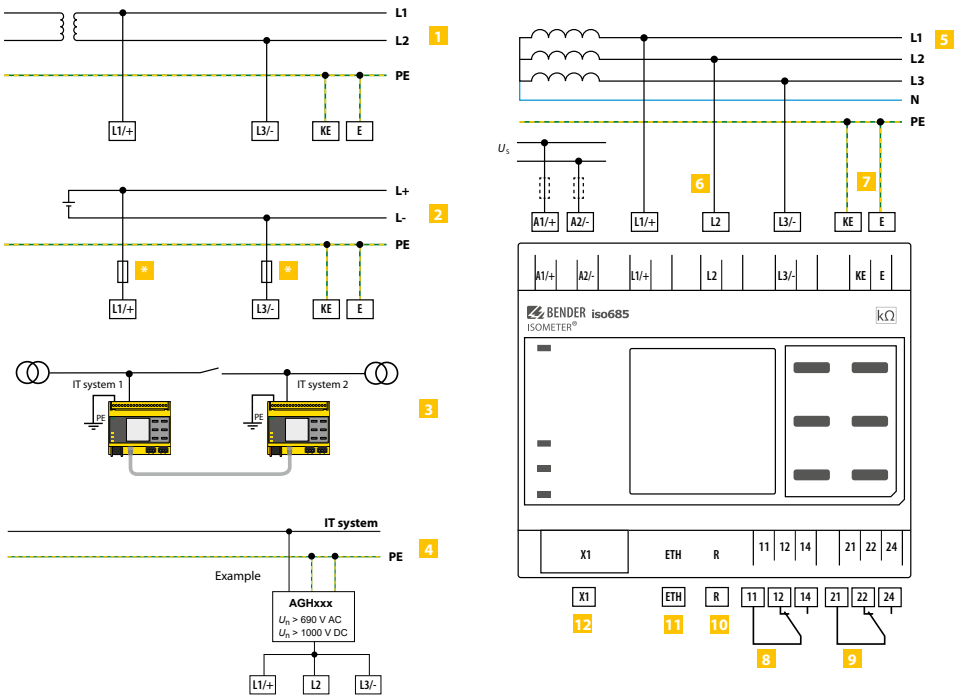

1 Connection to an AC system U_n

2 Connection to a DC system U_n

3 Linked with two IT systems which can be interconnected via a coupling switch. Information regarding the state of the coupling switch is not necessary.

4 Connection to an IT system with coupling device

5 Connection to a 3(N)AC system

6 Connection to the IT system to be monitored (L1/+, L2, L3/-)

7 Separate connection of KE, E to PE

8 (K1) Alarm relay 1, available changeover contacts

9 (K2) Alarm relay 2, available changeover contacts

10 Switchable resistor R for RS-485 bus termination

11 Ethernet interface

12 Digital interface

* For systems > 690 V and with overvoltage category III a fuse for the connection to the system to be monitored must be provided.

Recommendation: 2A screw-in fuses.

Provide line protection!

According to DIN VDE 0100-430, a line protection shall be provided for the supply voltage.

NOTE

According to DIN VDE 0100-430, devices for protection against a short-circuit can be omitted for the coupling of terminals L1/+, L2 and L3/- to the IT system ≤ 690 V to be monitored if the wiring is carried out in such a manner as to reduce the risk of a short-circuit to a minimum.
Ensure short-circuit-proof and earth-fault-proof wiring.

The connecting lines L1/+, L2, L3/- to the system to be monitored must be carried out as spur lines. No load current may be conducted through the terminals.

For UL applications:

Use 60/70°C copper lines only!
UL and CSA application require the supply voltage to be protected via 5 A fuses.

Digital interface X1

Digital interface	Terminal	Description
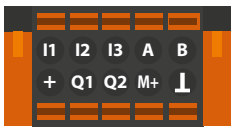 X1	I1…I3	Configurable digital inputs (e.g. test, reset, …)
	A, B	Serial interface RS-485, termination by means of a DIP switch R.
	+	Supply voltage of the inputs and outputs I, Q and M. Electrical overload protection. Automatic shutdown in the event of short circuits and transients (resettable). When supplied via an external 24 V source, A1/+, A2/- must not be connected.
	Q1, Q2	Configurable digital output
	M+	Configurable analogue output (e.g. measuring instrument)
	⊥	Reference potential ground

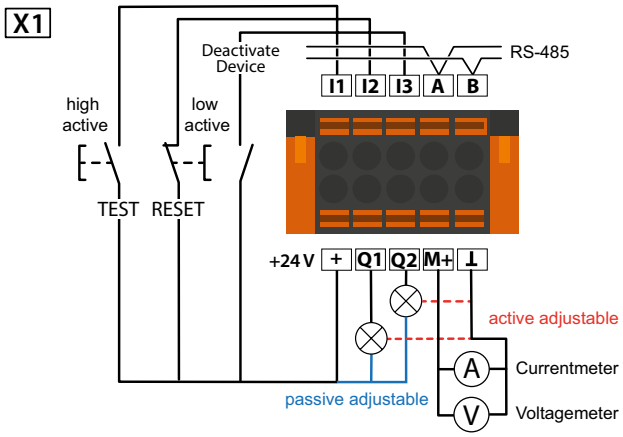

ISOsync for coupled IT systems

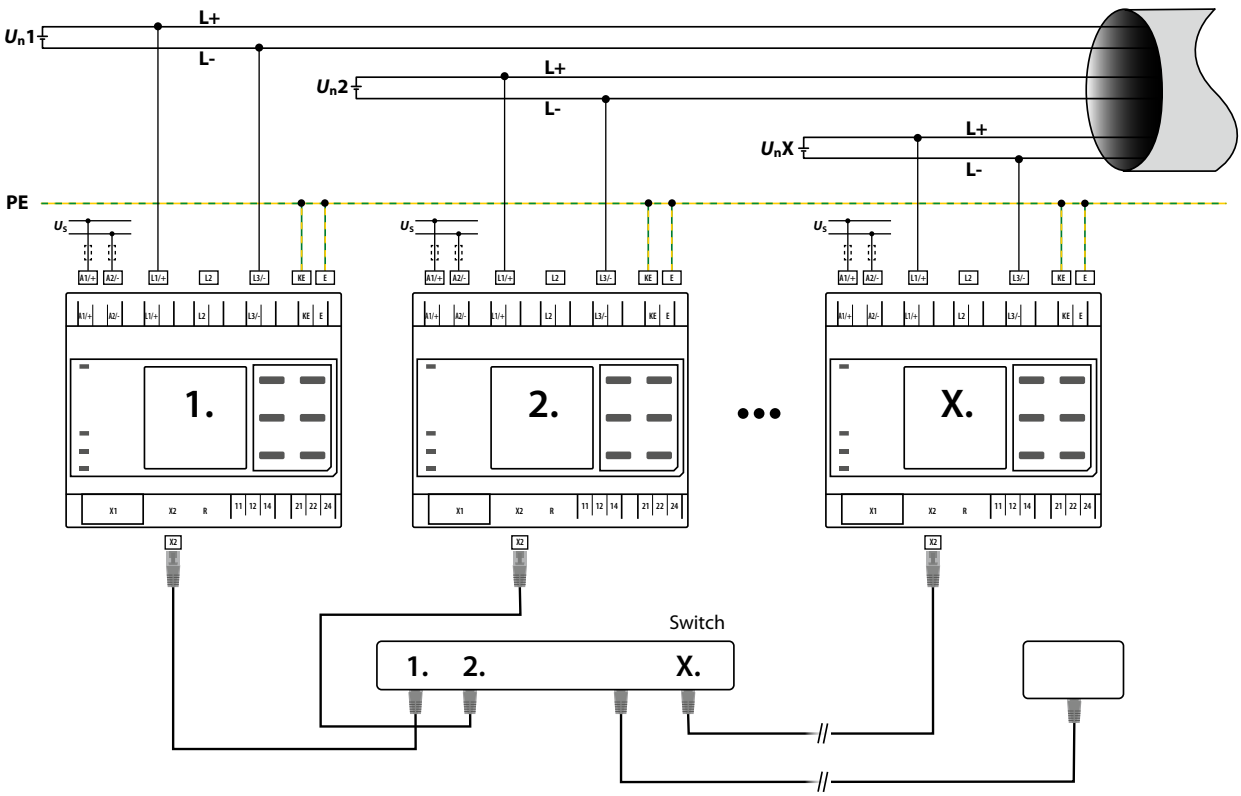

ISOMETER® isoRW685W-D

Insulation monitoring device for IT AC systems with galvanically connected rectifiers and converters and for IT systems especially for railway applications

AC/DC

Typical applications

- AC, DC or AC/DC main circuits
- AC/DC main circuits with directly connected DC components, such as rectifiers, converters, variable-speed drives
- UPS systems, battery systems
- Heaters with phase control
- Systems with switch-mode power supplies
- IT systems with high leakage capacitances

Approvals

Device features

- ISOMETER® for IT AC systems with galvanically connected rectifiers or inverters and for IT DC systems (IT = unearthed systems)
- Automatic adaptation to the existing system leakage capacitance
- Combination of ***AMP***^{Plus} and other profile-specific measurement methods
- Two separately adjustable response value ranges of 1 kΩ…10 MΩ for alarm 1 and alarm 2
- High-resolution graphic LC display
- Connection monitoring (monitoring of the measuring lines)
- Automatic device self test
- Graphical representation of the insulation resistance over time (isoGraph)
- History memory with real-time clock (buffer for three days) for storing 1023 alarm messages with date and time
- Current and voltage output 0(4)…20 mA, 0…400 µA, 0…10 V, 2…10 V (galvanically separated) which is analogous to the measured insulation value of the system
- Freely programmable digital inputs and outputs
- Remote setting via the Internet or Intranet (Webserver / Option: COMTRAXX® Gateway)
- Remote diagnosis via the Internet (made available by Bender Service only)
- isoData: Continuous uninterrupted data transmission
- RS-485/BS (Bender sensor bus) for communication with other Bender devices
- BCOM, Modbus TCP and web server

Standards

The ISOMETER® has been developed in compliance with the following standards:

- DIN EN 61557-8 (VDE 0413-8)
- IEC 61557-8
- DIN EN 50155
- DIN EN 45545-2

Further information

For further information refer to our product range on www.bender.de.

Ordering information

Type		Nominal system voltage range U_n	Supply voltage U_s	Art. No.
isoRW685W-D		AC 0…690 V; 1…460 Hz DC 0…1000 V	AC 24…240 V; 50…400 Hz DC 24…240 V	B91067012W

Accessories

Description	Art. No.
A set of screw terminals[1)]	B91067901
A set of push-wire terminals	B91067902
Enclosure accessories (terminal cover, 2 mounting clips) [1)]	B91067903

[1)] included in the scope of delivery

Suitable system components

Description	Type	Art. No.	Page
Coupling devices	AGH150W-4	B98018006	**363**
	AGH204S-4	B914013	**365**
	AGH520S	B913033	**366**
	AGH676S-4	B913055	**369**

Suitable measuring instruments on request!

Insulation coordination according to IEC 60664-1/IEC 60664-3

Definitions:	
Measuring circuit (IC1)	(L1/+, L2, L3/-)
Supply circuit (IC2)	A1, A2
Output circuit 1 (IC3)	11, 12, 14
Output circuit 2 (IC4)	21, 22, 24
Control circuit (IC5)	(E, KE), (X1, ETH, X3, X4)
Rated voltage	1000 V
Overvoltage category	III
Rated impulse voltage:	
IC1/(IC2-5)	8 kV
IC2/(IC3-5)	4 kV
IC3/(IC4-5)	4 kV
IC4/IC5	4 kV
Rated insulation voltage:	
IC1/(IC2-5)	1000 V
IC2/(IC3-5)	250 V
IC3/(IC4-5)	250 V
IC4/IC5	250 V
Pollution degree outside (U_n < 690 V)	3
Pollution degree outside (U_n >690 < 1000 V)	2
Safe isolation (reinforced insulation) between:	
IC1/(IC2-5)	Overvoltage category III, 1000 V
IC2/(IC3-5)	Overvoltage category III, 300 V
IC3/(IC4-5)	Overvoltage categoryIII, 300 V
IC4/IC5	Overvoltage category III, 300 V
Voltage test (routine test) according to IEC 61010-1:	
IC2/(IC3-5)	AC 2.2 kV
IC3/(IC4-5)	AC 2.2 kV
IC4/IC5	AC 2.2 kV

Supply voltage

Supply via A1/+, A2/-:

Supply voltage range U_s	AC/DC 24…240 V
Tolerance of U_s	-30…+15%
Maximum permissible input current of U_s	650 mA
Frequency range of U_s	DC, 50…400 Hz [1]
Tolerance of the frequency range of U_s	-5…+15 %
Typical power consumption DC	≤ 12 W
Typical power consumption 50/60 Hz	≤ 12 W/21 VA
Typical power consumption 400 Hz	≤ 12 W/45 VA

Supply via X1:

Supply voltage U_s	DC 24 V
Tolerance of U_s	DC -20…+25 %

IT system being monitored

Nominal system voltage range U_n	AC 0…690 V, DC 0…1000 V AC/DC 0…600 V (for UL applications)
Tolerance of U_n	AC/DC +15 %
Frequency range of U_n	DC, 0.1…460 Hz
Max. AC voltage $U_{\sim}$ in the frequency range f_n = 0.1…4 Hz	$U_{\sim max} = 50\ V * (1 + f_n^2/Hz^2)$

Response values

Response value R_{an1} (alarm 1)	1 kΩ…10 MΩ
Response value R_{an2} (alarm 2)	1 kΩ…10 MΩ
Relative uncertainty (acc. to IEC 61557-8)	profile dependent, ±15 %, at least ±1 kΩ
Hysteresis	25 %, at least 1 kΩ

Time response

Response time t_{an} at R_F = 0.5 x R_{an} (R_{an} = 10 kΩ) and C_e = 1 µF according to IEC 61557-8	profile dependent, typ. 4 s (see diagrams in manual)
Response time DC alarm at C_e = 1 µF	profile dependent, typ. 2 s (see diagrams in manual)
Start-up delay $T_{start-up}$	0…120 s

Measuring circuit

Measuring voltage U_m	profile dependent, ±10 V, ±50 V (see profile overview)
Measuring current I_m	≤ 403 µA
Internal resistance R_i, Z_i	≥ 124 kΩ
Permissible extraneous DC voltage U_{fg}	≤ 1200 V
Permissible system leakage capacitance C_e	profile dependent, 0…1000 µF

Measuring ranges

Measuring range f_n	0.1…460 Hz
Tolerance measurement of f_n	±1 % ±0.1 Hz
Voltage range measurement of f_n	AC 25…690 V
Measuring range U_n	AC 25…690 V, DC 0…1000 V
Voltage range measurement of U_n	AC/DC > 10 V
Tolerance measurement of U_n	±5 % ±5 V
Measuring range C_e	0…1000 µF
Tolerance measurement of C_e	±10 % ±10 µF
Frequency range measurement of C_e	DC, 30…460 Hz
Min. insulation resistance measurement of C_e	depending on the profile and coupling mode, typ. > 10 kΩ

Display

Indication	graphic display 127 x 127 pixels, 40 x 40 mm [2]
Display range measured value	0.1 kΩ…20 MΩ
Operating uncertainty (according to IEC 61557-8)	±15 %, at least ±1 kΩ

LEDs

ON (operation LED)	green
SERVICE	yellow
ALARM 1	yellow
ALARM 2	yellow

In-/Outputs (X1-Interface)

Cable length X1 (unshielded cable)	≤ 10 m
Cable length X1 (shielded cable, shield connected to earth (PE) on one end, recommended: J-Y(St)Y min. 2x0,8)	≤ 100 m
Total max. supply output current via X1.+/X1.GND for each output	max. 1 A
Total max. supply output current via A1/A2 in total on X1	max. 200 mA
Total max. supply output current via A1/A2 in total on X1 between 16.8 V and 40 V	I_{LmaxX1} = 10 mA + 7 mA/V * U_s [3] (negative values are not allowed for I_{LmaxX1})

Digital Inputs (I1, I2, I3)

Number	3
Operating mode, adjustable	active high, active low
Functions	off, test, reset, deactivate device, start initial measurement
Voltage	Low DC -3…5 V, High DC 11…32 V
Tolerance Voltage	±10 %

Digital Outputs (Q1, Q2)

Number	2
Operating mode, adjustable	active, passive
Functions	off, Ins. alarm 1, Ins. alarm 2, connection fault, DC- alarm [4], DC+ alarm [4], symmetrical alarm, device fault, common alarm, measurement complete, device inactive, DC offset alarm
Voltage	passive DC 0…32 V, active DC 0/19.2…32 V

Analogue Output (M+)

Number	1
Operating mode	linear, midscale point 28 kΩ/120 kΩ
Functions	insulation value, DC shift
Current	0…20 mA (< 600 Ω), 4…20 mA (< 600 Ω), 0…400 µA (< 4 kΩ)
Voltage	0…10 V (> 1 kΩ), 2…10 V (> 1 kΩ)
Tolerance related to the current/voltage final value	±20 %

Interfaces

Field bus

Interface/protocol	web server/Modbus TCP/BCOM
Data rate	10/100 Mbit/s, autodetect
Max. amount Modbus requests	< 100/s
Cable length	≤ 100 m
Connection	RJ45
IP address	DHCP/manual 192.168.0.5
Network mask	255.255.255.0
BCOM address	system-1-0
Function	communication interface

Sensor bus

Interface/protocol	RS-485/isoData/BS bus/Modbus RTU
Data rate	9.6 kBaud/s
Cable length	≤ 1200 m
Cable: twisted pair, one end of shield connected to PE	recommended: J-Y(St)Y min. 2x0.8
Connection	terminals X1.A, X1.B
Terminating resistor at the beginning and at the end of the transmission path	120 Ω, can be connected internally
Device address, BS bus	1…90

Switching elements

Number of switching elements	2 changeover contacts
Operating mode	N/C operation/N/O operation
Contact 11-12-14/21-22-24	off, Ins. alarm 1, Ins. alarm 2, connection fault, DC- alarm [4], DC+ alarm [4], symmetrical alarm, device fault, common alarm, measurement complete, device inactive, DC offset alarm
Electrical endurance under rated operating conditions, number of cycles	10.000

Contact data acc. to IEC 60947-5-1:

Utilisation category	AC-13	AC-14	DC-12	DC-12	DC-12	DC-12
Rated operational voltage	230 V	230 V	24 V	48 V	110 V	220 V
Rated operational current	5 A	3 A	1 A	1 A	0.2 A	0.1 A
Rated insulation voltage ≤ 2000 m NN						250 V
Rated insulation voltage ≤ 3000 m NN						160 V
Minimum contact rating						1 mA at AC/DC ≥ 10 V

Environment/EMC

EMC	DIN EN 50121-3-2, IEC 61326-2-4 [5]

Ambient temperatures:

Operating temperature	-40…+70 °C
Transport	-40…+85 °C
Long-term storage	-40…+70 °C

Classification of climatic conditions acc. to IEC 60721 (related to temperature and relative humidity)**:**

Stationary use (IEC 60721-3-3)	3K22
Transport (IEC 60721-3-2)	2K11
Long-term storage (IEC 60721-3-1)	1K22

Classification of mechanical conditions acc. to IEC 60721:

Stationary use (IEC 60721-3-3)	3M12
Transport (IEC 60721-3-2)	2M4
Long-term storage (IEC 60721-3-1)	1M12
Area of application	≤ 3000 m NN

Connection

Connection type	pluggable screw-type terminal or push-wire terminal

Screw-type terminals:

Nominal current	≤ 10 A
Tightening torque	0.5…0.6 Nm (5…7 lb-in)
Conductor sizes	AWG 24-12
Stripping length	7 mm
rigid/flexible	0.2…2.5 mm²
flexible with ferrules, with/without plastic sleeve	0.25…2.5 mm²
Multiple conductor	
rigid	0.2…1 mm²
flexible	0.2…1.5 mm²
flexible with ferrule without plastic sleeve	0.25…1 mm²
flexible with TWIN ferrule with plastic sleeve	0.5…1.5 mm²

Push-wire terminals:

Nominal current	≤ 10 A
Conductor sizes	AWG 24-12
Stripping length	10 mm
rigid/flexible	0.2…2.5 mm²
flexible with ferrules, with/without plastic sleeve	0.25…2.5 mm²
Multiple conductor, flexible with TWIN ferrule with plastic sleeve	0.5…1.5 mm²

Push-wire terminals X1:

Nominal current	≤ 8 A
Conductor sizes	AWG 24-16
Stripping length	10 mm
rigid/flexible	0.2…1.5 mm²
flexible with ferrule without plastic sleeve	0.25…1.5 mm²
flexible with TWIN ferrule with plastic sleeve	0.25…0.75 mm²

Other

Operating mode	continuous operation
Mounting (0°)	display oriented, cooling slots must be ventilated vertically [6]
Degree of protection internal components	IP40
Degree of protection terminals	IP20
DIN rail mounting acc. to	IEC 60715
Screw fixing	3 x M4 with mounting clip
Enclosure material	polycarbonate
Flammability class	V-0
ANSI code	64
Dimensions (W x H x D)	108 x 93 x 110 mm
Documentation number	D00178
Weight	< 390 g

[1] At a frequency > 200 Hz, the connection of X1 must be insulated. Only permanently installed devices which at least have overvoltage category CAT2 (300V) may be connected.

[2] Indication limited outside the temperature range -25…+55 °C.

[3] U_s [Volt] = supply voltage ISOMETER®

[4] For U_n ≥ 50 V only.

[5] This is a class A product. In a domestic environment, this product may cause radio interference. In this case, the user may be required to take corrective actions.

[6] Recommendation: Devices mounted at 0 ° (display-oriented, cooling slots must be ventilated vertically).

For devices mounted at an angle of 45°, the max. working temperature is reduced by 10 °C.
For devices mounted at an angle of 90°, the max. working temperature is reduced by 20 °C.

Dimension diagram (dimensions in mm)

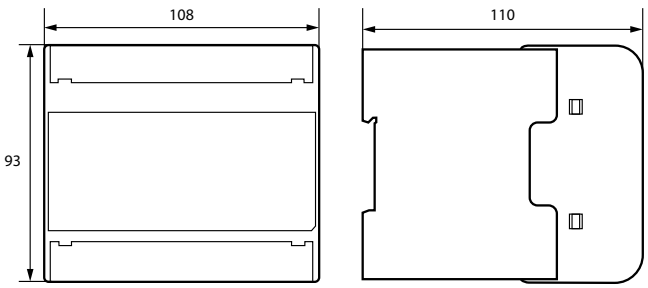

Wiring diagram

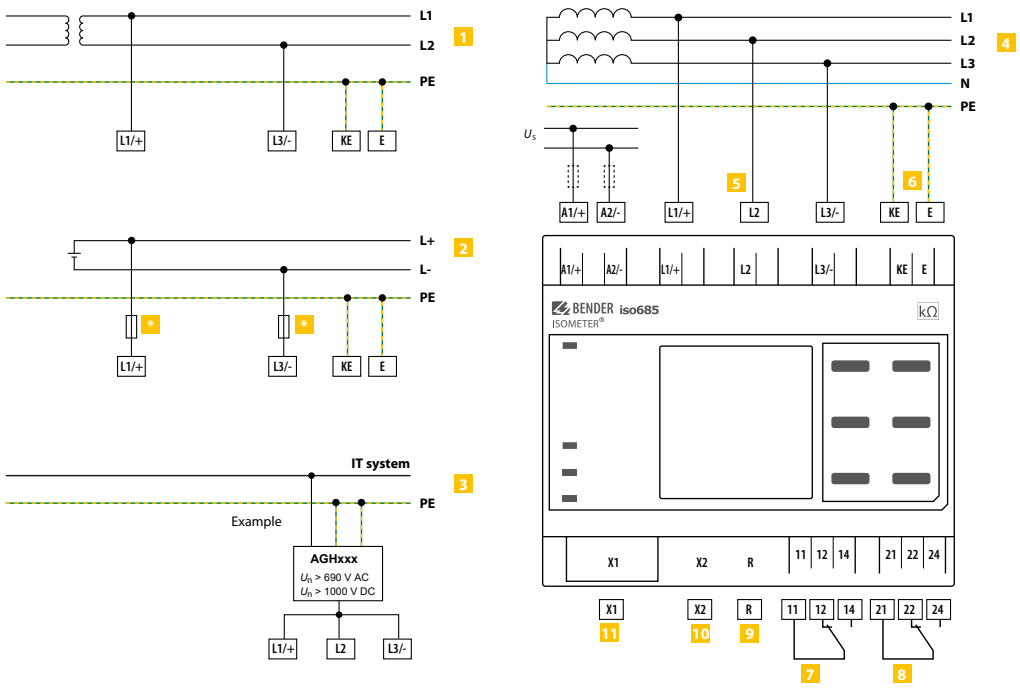

1 Connection to an AC system U_n

2 Connection to a DC system U_n

3 Connection to an IT system with coupling device

4 Connection to a 3(N)AC system

5 Connection to the IT system to be monitored (L1/+, L2, L3/-)

6 Separate connection of KE, E to PE

7 (K1) Alarm relay 1, available changeover contacts

8 (K2) Alarm relay 2, available changeover contacts

9 Switchable resistor *R* for RS-485 bus termination

10 Ethernet interface

11 Digital interface

* For systems > 690 V and with overvoltage category III a fuse for the connection to the system to be monitored must be provided.

Recommendation: 2A screw-in fuses.

Provide line protection!
According to DIN VDE 0100-430, a line protection shall be provided for the supply voltage.

NOTE:
According to DIN VDE 0100-430, devices for protection against a short circuit can be omitted for the coupling of terminals L1/+ and L3/- to the IT system ≤ 690 V to be monitored if the wiring is carried out in such a manner as to reduce the risk of a short circuit to a minimum. (Recommendation: Ensure short-circuit-proof and earth-fault-proof wiring).

The connecting lines L1/+, L2, L3/- to the system to be monitored must be carried out as spur lines. No load current may be conducted through the terminals.

For UL applications:
Use 60/70°C copper lines only!
UL and CSA application require the supply voltage to be protected via 5 A fuses.

Digital interface X1

Digital interface	Terminal	Description
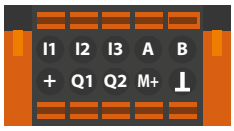 X1	I1…I3	Configurable digital inputs (e.g. test, reset, …)
	A, B	Serial interface RS-485, termination by means of a DIP switch **R**.
	+	Supply voltage of the inputs and outputs I, Q and M. Electrical overload protection. Automatic shutdown in the event of short circuits and transients (resettable). When supplied via an external 24 V source, A1/+, A2/- must not be connected.
	Q1, Q2	Configurable digital output
	M+	Configurable analogue output (e.g. measuring instrument)
	⊥	Reference potential ground

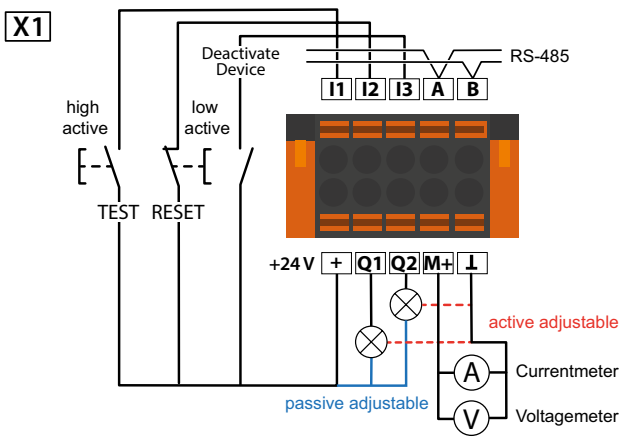

ISOMETER® isoRW685W-D-B

Insulation monitoring device for IT AC systems with galvanically connected rectifiers and converters and for IT DC systems especially for railway applications

AC/DC

Typical applications

- AC, DC or AC/DC main circuits
- AC/DC main circuits with directly connected DC components, such as rectifiers, converters, variable-speed drives
- UPS systems, battery systems
- Heaters with phase control
- Systems with switch-mode power supplies
- IT systems with high leakage capacitances

Approvals

Device features

- ISOMETER® for AC IT systems with galvanically connected rectifiers or converters and for DC IT systems (IT = unearthed systems)
- Automatic adaptation to the existing system leakage capacitance
- Combination of ***AMP***^{Plus} and other profile-dependent measurement methods
- Two separately adjustable response value ranges of 1 kΩ…10 MΩ
- High-resolution graphic LC display
- Connection monitoring (monitoring of the measuring lines)
- Automatic device self test
- Graphical representation of the insulation resistance over time (isoGraph)
- History memory with real-time clock (buffer for 13 days) for storing a maximum of 1023 alarm messages with date and time
- Current or voltage output 0(4)…20 mA, 0…400 µA, 0…10 V, 2…10 V (galvanically separated) which is analogous to the measured insulation value of the system
- Freely programmable digital inputs and outputs
- Remote setting via the Internet or Intranet (web server/option: COMTRAXX® gateway)
- Remote diagnosis via the Internet (made available by Bender Service only)
- isoData: Continuous uninterrupted data transmission
- RS-485/BS (Bender sensor bus) for data exchange with other Bender devices via Modbus RTU protocol
- BCOM, Modbus TCP und web server
- ISOnet: Internal separation of the ISOMETER® from the IT system to be monitored (e.g. if several IT systems are interconnected)
- ISOnet priority: Permanent priority of a device within the network
- ISOloop: Special function for ring systems (all systems are coupled)

Standards

The ISOMETER® has been developed in compliance with the following standards:

- DIN EN 61557-8 (VDE 0413-8)
- IEC 61557-8
- DIN EN 50155
- DIN EN 45545-2

Further information

For further information refer to our product range on www.bender.de.

Ordering information

Type		Nominal system voltage range U_n	Supply voltage U_s	Art. No.
isoRW685W-D-B		AC 0…690 V; 0,1…460 Hz DC 0…1000 V	AC 24…240 V; 50…400 Hz DC 24…240 V	B91067022W

Accessories

Description	Art. No.
A set of screw terminals[1)]	B91067901
A set of push-wire terminals	B91067902
Enclosure accessories (terminal cover, 2 mounting clips) [1)]	B91067903

[1)] included in the scope of delivery

Suitable system components

Description	Type	Art. No.	Page
Coupling devices	AGH150W-4	B98018006	**363**
	AGH204S-4	B914013	**365**
	AGH520S	B913033	**366**
	AGH676S-4	B913055	**369**

Suitable measuring instruments on request!

Insulation coordination acc. to IEC 60664-1/IEC 60664-3

Definitions:	
Measuring circuit (IC1)	(L1/+, L2, L3/-)
Supply circuit (IC2)	A1, A2
Output circuit 1 (IC3)	11, 12, 14
Output circuit 2 (IC4)	21, 22, 24
Control circuit (IC5)	(E, KE), (X1, ETH, X3, X4)
Rated voltage	1000 V
Overvoltage category	III
Rated impulse voltage:	
IC1/(IC2-5)	8 kV
IC2/(IC3-5)	4 kV
IC3/(IC4-5)	4 kV
IC4/IC5	4 kV
Rated insulation voltage:	
IC1/(IC2-5)	1000 V
IC2/(IC3-5)	250 V
IC3/(IC4-5)	250 V
IC4/IC5	250 V
Pollution degree outside (U_n < 690 V)	3
Pollution degree outside (U_n > 690 < 1000 V)	2
Protective separation (reinforced insulation) between:	
IC1/(IC2-5)	overvoltage category III, 1000 V
IC2/(IC3-5)	overvoltage category III, 300 V
IC3/(IC4-5)	overvoltage category III, 300 V
IC4/IC5	overvoltage category III, 300 V
Voltage test (routine test) acc. to IEC 61010-1:	
IC2/(IC3-5)	AC 2.2 kV
IC3/(IC4-5)	AC 2.2 kV
IC4/IC5	AC 2.2 kV

Supply voltage

Supply via A1/+, A2/-:

Supply voltage range U_s	AC/DC 24…240 V
Tolerance of U_s	-30…+15 %
Maximum permissible input current of U_s	650 mA
Frequency range of U_s	DC, 50…400 Hz [1]
Tolerance of the frequency range of U_s	-5…+15 %
Typical power consumption DC	≤ 12 W
Typical power consumption 50/60 Hz	≤ 12 W/21 VA
Typical power consumption 400 Hz	≤ 12 W/45 VA

Supply via X1:

Supply voltage U_s	DC 24 V
Tolerance of U_s	DC -20…+25 %

Monitored IT system

Nominal system voltage range U_n	AC 0…690 V, DC 0…1000 V AC/DC 0…600 V (for UL applications)
Tolerance of U_n	AC/DC +15 %
Frequency range of U_n	DC 0.1…460 Hz
Max. AC voltage $U_{\sim}$ in the frequency range f_n = 0.1…4 Hz	$U_{\sim\,max} = 50\ V*(1+f_n^2/Hz^2)$

Response values

Response value R_{an1} (Alarm 1)	1 kΩ…10 MΩ
Response value R_{an2} (Alarm 2)	1 kΩ…10 MΩ
Relative uncertainty (acc. to IEC 61557-8)	profile-dependent, ±15 %, min. ±1 kΩ
Hysteresis	25 %, min. 1 kΩ

Time response

Response time t_{an} at R_F = 0.5 x R_{an} (R_{an} = 10 kΩ) and C_e = 1 µF acc. to IEC 61557-8	profile-dependent, typ. 4 s (see diagrams in the manual)
Response time DC alarm at C_e = 1 µF	profile-dependent, typ. 2 s (see diagram in the manual)
Start-up delay $T_{start-up}$	0…120 s

Measuring circuit

Measuring voltage U_m	profile-dependent, ±10 V, ±50 V (see profile overview)
Measuring current I_m	≤ 403 µA
Internal resistance R_i, Z_i	≥ 124 kΩ
Internal resistance with system isolation (inactive via I/O; inactive via ISOnet; shutdown)	typ. 50 MΩ
Permissible extraneous DC voltage U_{fg}	≤ 1200 V
Permissible system leakage capacitance C_e	profile-dependent, 0…1000 µF

Measuring ranges

Measuring range f_n	0.1…460 Hz
Measurement tolerance of f_n	±1 % ±0.1 Hz
Measurement voltage range of f_n	AC 25…690 V
Measuring range U_n	AC 25…690 V, DC 25…1000 V
Measurement voltage range of U_n	AC/DC > 10 V
Measurement tolerance of U_n	±5 % ±5 V
Measuring range C_e	0…1000 µF
Measurement tolerance of C_e	±10 % ±10 µF
Measurement frequency range of C_e	DC, 30…460 Hz
Min. measurement insulation resistance of C_e	depending on profile and coupling mode, typ. > 10 kΩ

Display

Display	graphic display 127 x 127 pixels, 40 x 40 mm [2]
Display range measured value	0.1 kΩ…20 MΩ
Operating uncertainty (acc. to IEC 61557-8)	±15 %, min. 1 kΩ

LEDs

ON (operation LED)	green
SERVICE	yellow
ALARM 1	yellow
ALARM 2	yellow

Inputs/outputs (X1 interface)

Cable length X1 (unshielded cable)	≤ 10 m
Cable length X1 (shielded cable, shield connected to PE on one side, recommended: J-Y(St)Y min. 2x0.8)	≤ 100 m
Total max. supply output current via X1.+/X1.GND for each output	max. 1 A
Total max. supply output current via A1/A2 in total on X1	max. 200 mA
Total max. supply output current via A1/A2 in total on X1 between 16.8 V and 40 V	I_{LmaxX1} = 10 mA + 7 mA/V * U_s [3] (negative values are not allowed for I_{LmaxX1})

Digital inputs (I1, I2, I3)

Number	3
Operating mode, adjustable	active high, active low
Functions	off, test, reset, deactivate device, start initial measurement
Voltage	Low DC -3…5 V, High DC 11…32 V
Voltage tolerance	±10 %

Digital outputs (Q1, Q2)

Number	2
Operating mode, adjustable	active, passive
Functions	off, ins. alarm 1, ins. alarm 2, connection fault, DC- alarm [4], DC+ alarm [4], symmetrical alarm, device error, common alarm, measurement complete, device inactive, DC offset alarm
Voltage	passive DC 0…32 V, active DC 0/19.2…32 V

Analogue output (M+)

Number	1
Operating mode	linear, mid-scale 28 kΩ/120 kΩ
Functions	insulation value, DC offset
Current	0…20 mA (< 600 Ω), 4…20 mA (< 600 Ω), 0…400 µA (< 4 kΩ)
Voltage	0…10 V (>1 kΩ), 2…10 V (>1 kΩ)
Tolerance related to the current/voltage final value	±20 %

Interfaces

Field bus

Interface/protocol	web server/Modbus TCP/BCOM
Data rate	10/100 Mbit/s, autodetect
Max. amount Modbus requests	< 100/s
Cable length	≤ 100 m
Connection	RJ45
IP address	DHCP/manual 192.168.0.5
Network mask	255.255.255.0
BCOM address	system-1-0
Function	communication interface

ISOnet

Number of ISOnet devices	2…20 dev
Maximum nominal system voltage ISOnet	AC, 690 V/DC, 1000 V

ISOloop

ISOloop devices	2…10 dev

Sensor bus

Interface/protocol	RS-485/isoData/BS bus/Modbus RTU
Data rate	9.6 kbaud/s
Cable length	≤ 1200 m
Cable: twisted pair, one end of shield connected to PE	recommended: J-Y(St)Y min. 2x0.8
Connection	Terminals X1.A, X1.B
Terminating resistor at the beginning and end of the transmission path	120 Ω, can be connected internally
Device address, BS bus	1…90

Switching elements

Switching elements	2 changeover contacts
Operating mode	N/C operation or N/O operation
Contact 11-12-14/21-22-24	off, ins. alarm 1, ins. alarm 2, connection fault, DC- alarm [4], DC+ alarm [4], symmetrical alarm, device error, common alarm, measurement complete, device inactive, DC offset alarm
Electrical endurance, number of cycles	10000

Contact data acc. to IEC 60947-5-1:

Utilisation category	AC-13	AC-14	DC-12	DC-12	DC-12	DC-12
Rated operational voltage	230 V	230 V	24 V	48 V	110 V	220 V
Rated operational current	5 A	3 A	1 A	1 A	0.2 A	0.1 A
Rated insulation voltage ≤ 2000 m NN						250 V
Rated insulation voltage ≤ 3000 m NN						160 V
Minimum contact rating						1 mA at AC/DC ≥ 10 V

Environment/EMC

EMC	DIN EN 50121-3-2, IEC 61326-2-4 [5]

Ambient temperatures:

Operating temperature	-40…+70 °C
Transport	-40…+85 °C
Long-term storage	-40…+70 °C

Classification of climatic conditions acc. to IEC 60721 (related to temperature and relative humidity)**:**

Stationary use (IEC 60721-3-3)	3K22
Transport (IEC 60721-3-2)	2K11
Long-term storage (IEC 60721-3-1)	1K22

Classification of mechanical conditions acc. to IEC 60721:

Stationary use (IEC 60721-3-3)	3M12
Transport (IEC 60721-3-2)	2M4
Long-term storage (IEC 60721-3-1)	1M12
Area of application	≤ 3000 m NN

Connection

Connection type	pluggable screw terminal or push-wire terminal

Screw-type terminals:

Nominal current	≤ 10 A
Tightening torque	0.5…0.6 Nm (5…7 lb-in)
Conductor sizes	AWG 24-12
Stripping length	7 mm
rigid/flexible	0.2…2.5 mm²
flexible with ferrule with/without plastic sleeve	0.25…2.5 mm²
Multiple conductor rigid	0.2…1 mm²
Multiple conductor flexible	0.2…1.5 mm²
Multiple conductor flexible with ferrule without plastic sleeve	0.25…1 mm²
Multiple conductor flexible with TWIN ferrule with plastic sleeve	0.5…1.5 mm²

Push-wire terminals:

Nominal current	≤ 10 A
Conductor sizes	AWG 24-12
Stripping length	10 mm
rigid/flexible	0.2…2.5 mm²
flexible with ferrule with/without plastic sleeve	0.25…2.5 mm²
Multiple conductor, flexible, with TWIN ferrule with plastic sleeve	0.5…1.5 mm²

Push-wire terminals X1:

Nominal current	≤ 8 A
Conductor sizes	AWG 24-16
Stripping length	10 mm
rigid/flexible	0.2…1.5 mm²
flexible with ferrule without plastic sleeve	0.25…1.5 mm²
flexible with ferrule with plastic sleeve	0.25…0.75 mm²

Other

Operating mode	Continuous operation
Mounting position (0°)	display-oriented, cooling slots must be ventilated vertically [6]
Degree of protection internal components	IP40
Degree of protection terminals	IP20
DIN rail mounting acc. to	IEC 60715
Screw mounting	3 x M4 with mounting clip
Enclosure material	Polycarbonate
Flammability class	V-0
ANSI code	64
Dimensions (W x H x D)	108 x 93 x 110 mm
Documentation number	D00419
Weight	< 390 g

1) At a frequency > 200 Hz, the connection of X1 must be insulated. Only permanently installed devices which at least have overvoltage category CAT2 (300 V) may be connected.

2) Indication limited outside the temperature range -25…+55 °C.

3) U_s [Volt] = supply voltage ISOMETER®

4) Only for U_n ≥ 50 V.

5) This is a class A product. In a domestic environment, this product may cause radio interference. In this case, the user may be required to take corrective actions.

6) Recommendation: Mounting position 0° (display-oriented, cooling slots must be ventilated vertically).

At mounting position 45°, the max. operating temperature is reduced by 10 °C.
At mounting position 90°, the max. operating temperature is reduced by 20 °C.

Dimension diagram (dimensions in mm)

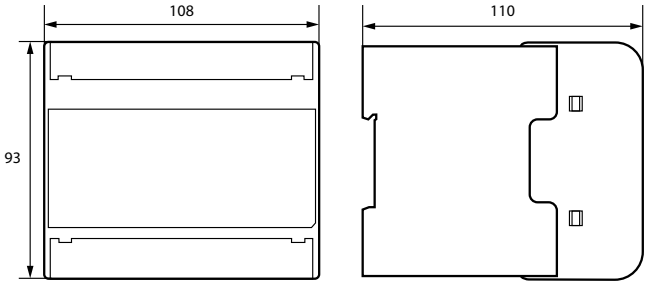

Wiring diagram

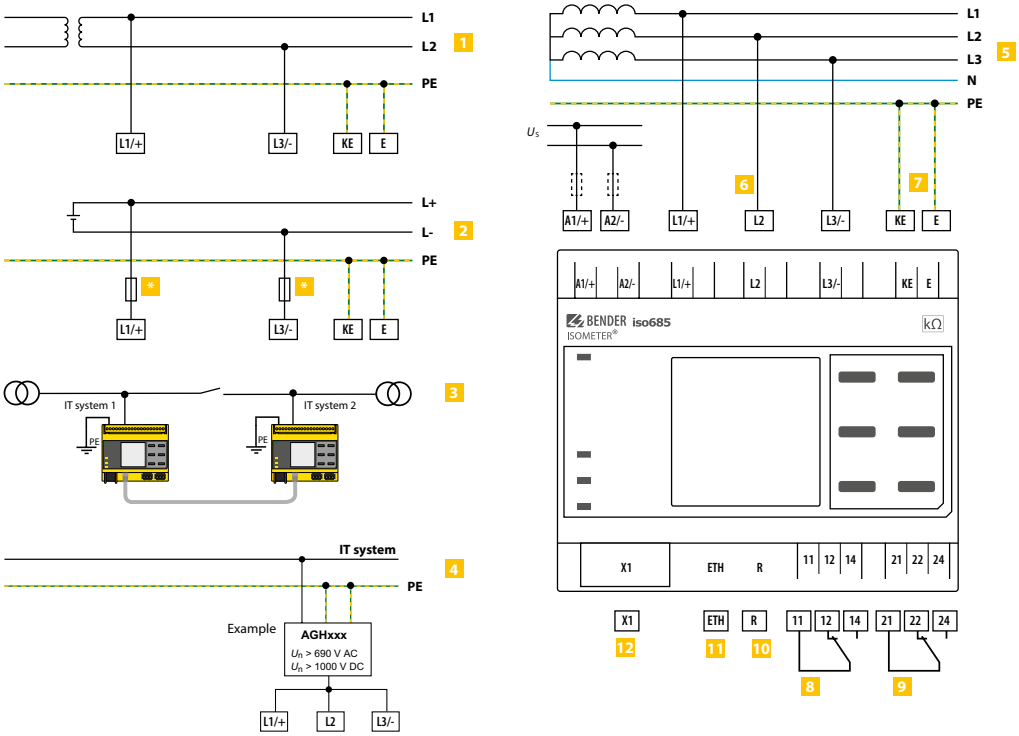

1 Connection to an AC system U_n

2 Connection to a DC system U_n

3 Connection to two IT systems that can be coupled with a coupling switch. Information about the state of the coupling switch is not necessary.

4 Connection to an IT system using coupling device

5 Connection to a 3(N)AC system

6 Connection to the IT system to be monitored (L1/+, L2, L3/-)

7 Separate connection of KE, E to PE

8 (K1) Alarm relay 1, available changeover contacts

9 (K2) Alarm relay 2, available changeover contacts

10 Switchable resistor R for RS-485 bus termination

11 Ethernet interface

12 Digital interface

* In systems > 690 V and with overvoltage category III, a fuse for the connection to the system to be monitored must be provided.
Recommendation: 2A screw-type fuses

Provide line protection!
According to DIN VDE 0100-430, line protection shall be provided for the supply voltage.

Note:

According to DIN VDE 0100-430, devices for protection against a short circuit can be omitted for the coupling of terminals L1/+, L2 and L3/- to the IT system ≤ 690 V to be monitored if the wiring is carried out in such a manner as to reduce the risk of a short circuit to a minimum (recommendation: Ensure short-circuit-proof and earth-fault-proof wiring).

The connecting lines L1/+, L2, L3/- to the system to be monitored must be carried out as spur lines. No load current may be conducted through the terminals.

For UL applications:

Use 60/70 °C copper lines only!
UL and CSA applications require the supply voltage to be protected via 5 A fuses.

Digital interface X1

Digital interface	Terminal	Description
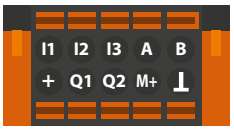 X1	I1…I3	Configurable digital inputs (e.g. test, reset, …)
	A, B	Serial interface RS-485, termination by means of a DIP switch **R.**
	+	Supply voltage of the inputs and outputs I, Q and M. Electrical overload protection. Automatic shutdown in the event of short circuits and transients (resettable). When supplied via an external 24 V source, A1/+, A2/- must not be connected.
	Q1, Q2	Configurable digital output
	M+	Configurable analogue output (e.g. measuring instrument)
	⊥	Reference potential ground

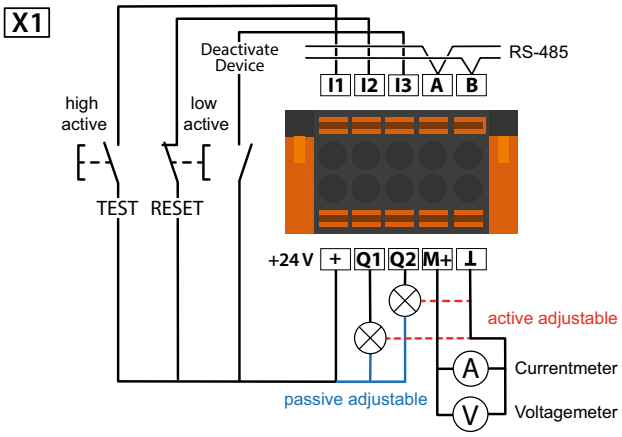

Display FP200

Display and operator unit for devices of the iso685 series without display

Device features

- Display for front panel mounting of series iso685
- Various mounting options
- Uniform operation
- Backlit buttons

Further information

For further information refer to our product range on www.bender.de.

Typical applications

- Display and operator unit for devices of the iso685 series without display

Approvals

Ordering information

Type	Supply voltage/frequency range U_s	Power consumption	Art. No.
FP200	DC 24 V/-20…+25 %	typ. 3 W	B91067904
FP200W[1)]			B91067904W

[1)] Device version Option "W" with increased shock and vibration resistance

Accessories

Description	Art. No.
FP200 mechanical accessories comprising: 2 screw attachments	B91067907
Patch cable CAT5e (without UL, temperature range 0…+60 °C) Included in the scope of delivery	B91067906
FP200 adapter for front panel mounting IRDH575	B91067905

Technical data

Insulation co-ordination (IEC 60664-1/IEC 60664-3)	
Rated voltage	50 V
Overvoltage category (OVC)	III
Rated impulse voltage	800 V
Rated insulation voltage	50 V
Pollution degree for accessible parts on the outside of the device housing	3

Supply voltage	
Supply voltage U_s	DC 24 V (via iso685-S variant)
Power consumption	1.2 W

Display	
Graphic display	127 x 127 pixel, 40 x 40 mm

LEDs	
ON (operation LED)	green
SERVICE	yellow
ALARM 1	yellow
ALARM 2	yellow

Interfaces	
Interface/protocol	Internal Bender
Cable length	≤ 5 m
REMOTE Cable	Patch cable at least CAT5e

Environment/EMC	
EMC	IEC 61326-2-4; EN 50121-3-2; EN 50121-4

Ambient temperatures	
Operating temperature	-25…+55 °C
Transport	-40…+85 °C
Long-term storage	-40…+70 °C

Classification of climatic conditions acc. to IEC 60721 (related to temperature and relative humidity):	
Stationary use (IEC 60721-3-3)	3K22
Transport (IEC 60721-3-2)	2K11
Long-time storage (IEC 60721-3-1)	1K22

Classification of mechanical conditions acc. to IEC 60721:	
Stationary use (IEC 60721-3-3)	3M11
Transportation (IEC 60721-3-2)	2M4
Long-term storage (IEC 60721-3-1)	1M12
Area of application	≤3000 m NN

Connection	
Connection type	plug connectors

Other	
Operating mode	continuous operation
Mounting (0°)	display oriented, cooling slots must be ventilated vertically [1]
Degree of protection, built-in components (DIN EN 60529)	IP40
Degree of protection, terminals (DIN EN 60529)	IP20
Panel cut-out	138x66 mm
Permissible tolerance of panel cut-out	+0.5 /–0
Screw mounting	with mounting brackets
Torque screw mounting	0,3 Nm ±10%
Enclosure material	polycarbonate
Flammability class	UL94V-0
Dimensions (W x H x D)	144 x 72 x 35.6 mm
Documentation number	D00169
Weight	< 180 g

Option „W“ data different from the standard version	
(Only for remote mounting)	
Ambient temperatures:	
Operating temperature	-40…+70 °C
Transport	-40…+85 °C
Long-term storage	-40…+70 °C
Classification of climatic conditions acc. to IEC 60721:	
Stationary use (IEC 60721-3-3)	3K23 (condensation and formation of ice possible)
Classification of mechanical conditions acc. to IEC 60721:	
Stationary use (IEC 60721-3-3)	3M12

( )* = factory setting

[1] Recommendation: Devices mounted at 0° (display-oriented, cooling slots must be ventilated vertically). For devices mounted at an angle ≠ 0°, the max. working temperature is reduced by 10 °C for devices with a "W" in the device name.

Dimension diagram (dimensions in mm)

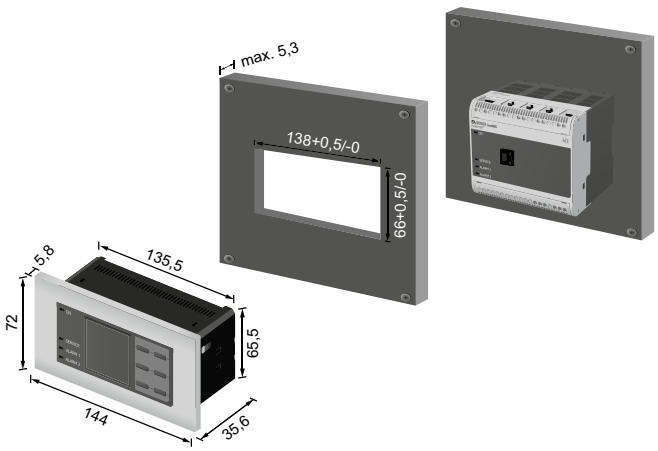

Connection to iso685

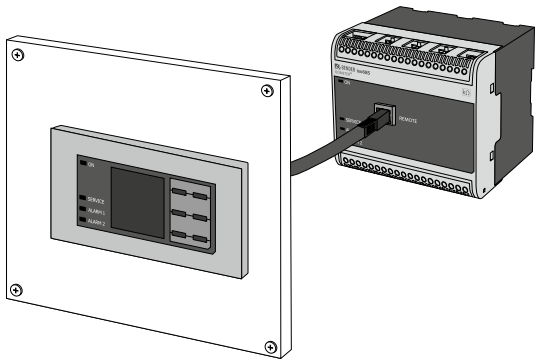

ISOMETER® IRDH275BM-7 with coupling device AGH675-7 and AGH675-7MV15

Device combination for insulation monitoring in unearthed AC, AC/DC and DC power systems (IT systems)

AC/DC

Typical applications

- AC, DC or AC/DC medium voltage systems
- AC/DC medium voltage systems with directly connected DC components, such as rectifiers, converters, and thyristor-controlled DC drives

Approvals

IRDH275BM-7

Device features

- Insulation monitoring for drives including medium voltage converters up to 15.5 kV
- Two separately adjustable response values100 kΩ…10 MΩ
- ***AMP**Plus* measurement method (European patent: EP 0 654 673 B1)
- Automatic adaptation to the system leakage capacitance
- Info button to display device settings and the system leakage capacitance
- History memory with real-time clock to store alarm messages with date and time stamp
- BMS interface (Bender Measuring Device Interface) for communication with other Bender devices (RS-485 electrically isolated)
- Current output 0(4)…20mA (electrically isolated) analogously to the measured insulation value
- Self monitoring with automatic alarm
- Automatic self test, selectable
- Connection for external kΩ indication
- Test and reset button
- Connection external test and reset button
- Two separate alarm relays with two potential-free changeover contacts
- N/O or N/C operation, selectable
- Backlit two-line plain text display
- Remote setting of specific parameters via Internet (option; COM460IP with at least Option C required)

Standards

The ISOMETER® has been developed in compliance with the following standards:

- DIN EN 61557-8 (VDE 0413-8)
- EN 61557-8
- IEC 61557-8
- IEC 61326-2-4
- DIN EN 60664-1 (VDE 0110-1)
- DIN EN 60664-3 (VDE 0110-3)
- ASTM F1669M-96
- ASTM F1207M-96

Further information

For further information refer to our product range on www.bender.de.

Ordering information

Type	Nominal system voltage U_n	Supply voltage U_s	Cable length	Art. No.	Page
IRDH275BM-727	–	AC 19.2…55 V; 42…460 Hz, DC 19.2…72 V	–	B91065120	–
AGH675S-7-2000	AC/DC 0…7.2 kV; 0…460 Hz	–	2000 mm	B913061	**367**
AGH675S-7-500			500 mm	B913060	**367**
AGH675S-7MV15-500	AC/DC 0…15.5 kV, 0…460 Hz	–	500 mm	B913058	**367**

Suitable system components

Description	Type	Art. No.	Page
External kΩ measuring instruments	9620-1421	B986849	**388**

Insulation coordination acc. to IEC 60664-1

Rated voltage	AC 800 V
Rated impulse voltage/pollution degree	8 kV/3

Voltage ranges

Nominal voltage range U_n	via AGH675S-7…
Supply voltage U_s (also see nameplate)	AC 19.2…55 V*
Frequency range U_s	42…460 Hz
Supply voltage U_s (also see nameplate)	DC 19.2…72 V*
Power consumption	≤14 VA

Response values

Response value Ran1 (Alarm 1)	100 kΩ…10 MΩ
Response value Ran2 (Alarm 2)	100 kΩ…10 MΩ
Relative percentage error 100…500 kΩ	±100 kΩ
Relative percentage error 500 kΩ…10 MΩ	0 %…+20 %
Response time tan	≤ 5 min
Hysteresis	25 %

Measuring circuit

Measuring voltage Um	≤ 50 V
Measuring current Im (at RF = 0 Ω)	≤ 21 µA
Internal DC resistance Ri	≥ 2.4 MΩ
Internal impedance Zi, at 50 Hz	≥ 2.4 MΩ
Permissible extraneous DC voltage Ufg	with AGH675S-7…
Permissible system leakage capacitance Ce	≤ 5 µF
Factory setting	2 µF

Displays

Display, illuminated	two-line display
Characters (number of characters)	2 x 16
Display range, measuring value	50 kΩ…10 MΩ
Relative percentage error 50…500 kΩ	±50 kΩ
Relative percentage error 500 kΩ…10 MΩ	±10 %

Outputs/inputs

TEST/ RESET button	internal/external
Cable length TEST/RESET button external	≤ 10 m

Current output for measuring instrument SKMP (scale centre point = 1.2 MΩ):

Current output (load)	20 mA (≤ 500 Ω)
Accuracy current output (100 kΩ…10 MΩ)	±10 %, ±100 kΩ

Serial interface

Interface/Protocol	RS-485/BMS
Connection	terminals A/B
Cable length	≤ 1200 m
Recommended cable (screened, screen on one side connected to PE)	J-Y(St)Y 2x0.6
Terminating resistor	120 Ω (0.5 W)
Device address, BMS bus	1…30 (factory setting = 3)

Switching components

Switching components	2 changeover contacts: K1 (Alarm 1), K2 (Alarm 2, system fault)
Operating principle K1, K2 (Alarm 1, Alarm 2)	N/O or N/C operation
Factory setting (Alarm 1/Alarm 2)	N/O operation
Electrical endurance	12 000 switching operations
Contact class	IIB (IEC 60255-23)
Rated contact voltage	AC 250 V/DC 300 V
Making capacity	AC/DC 5 A
Breaking capacity	2 A, AC 230 V, cos phi = 0.4 0,2 A, DC 220 V, L/R = 0.04 s
Minimum contact current at DC 24 V	≥ 2 mA (50 mW)

Environment/EMC

EMC immunity	acc. to EN 61326
EMC emission	acc. to EN 61326
Shock resistance IEC 60068-2-27 (device in operation)	15 g/11 ms
Bumping IEC 60068-2-29 (during transport)	40 g/6 ms
Vibration resistance IEC 60068-2-6 (device in operation)	1 g/10…150 Hz
Vibration resistance IEC 60068-2-6 (during transport)	2 g/10…150 Hz
Ambient temperature (during operation)	-10 …+55 °C
Storage temperature range	-40 …+70 °C
Climatic class acc. to IEC 60721-3-3	3K22

Connection

Connection	screw terminals
Connection	
rigid, flexible	0.2…4 mm²/0.2…2.5 mm²
flexible with connector sleeve, without/with plastic sleeve	0.25…2.5 mm²
Conductor sizes	AWG 24-12

Other

Operating mode	continuous operation
Mounting	as indicated on the display
Protection class, internal components (DIN EN 60529)	IP30
Protection class, terminals (DIN EN 60529)	IP20
Type of enclosure	X112, free from halogen
DIN rail mounting	IEC 60715
Flammability class	UL94 V-0
Tightening torque	0.5 Nm
Documentation number	D00123
Weight approx.	510 g

Insulation coordination acc. to DIN EN 61800-5-1

AGH675S-7	
Rated insulation voltage	AC 7.2 kV
AGH675S-7MV15	
Rated insulation voltage	AC 15.5 kV

Voltage test acc. to DIN EN 61800-5-1

Type test:	
AGH675S-7	
Voltage impulse test (basic insulation)	40 kV
AC voltage test (basic insulation)	20 kV
Partial discharge test	14 kV
AGH675S-7MV15	
Voltage impulse test (basic insulation)	111 kV
AC voltage test (basic insulation)	70 kV
Partial discharge test	29 kV
Routine test:	
AC voltage test	40 kV

Voltage ranges

AGH675S-7	
Nominal system voltage U_n	AC, 3(N)AC, DC 0…7.2 kV
Nominal frequency f_n	0…460 Hz
Internal DC resistance R_i	≥ 2.39 MΩ
AGH675S-7MV15	
Nominal system voltage U_n	AC, 3(N)AC, DC 0…15.5 kV
Nominal frequency f_n	0…460 Hz
Internal DC resistance R_i	≥ 4.7 MΩ

Environment

Operating temperature (normal operation)	- 10…+ 60 °C
Operating temperature (continuous operation with asymetrical earth fault	- 10…+ 55 °C

Classification of climatic conditions acc. to IEC 60721 (no condensation, no formation of ice)

Stationary use (IEC 60721-3-3)	3K22
Transport (IEC 60721-3-2)	2K11
Long-term storage (IEC 60721-3-1)	1K22

Classification of mechanical conditions acc. to IEC 60721

Stationary use (IEC 60721-3-3)	3M11 (3M12 Y shaft)
Transport (IEC 60721-3-2)	2M4
Long-term storage (IEC 60721-3-1)	1M12

Connection

Connection terminal 2 (medium voltage)	high-voltage cable (encapsulated on the device side)
Connection, flexible with ring terminal	M4
Connection 3, 4, 5	screw-type terminals
Connection	
rigid, flexible	0.2…4 mm²/0.2…2.5 mm²
flexible with connector sleeve	0.25…2.5 mm²

Other

Operating mode	continuous operation
Mounting	any position
Protection class, internal components (DIN EN 60529)	IP64
Protection class, terminals (DIN EN 60529)	IP20
Type of enclosure	resin-encapsulated block
Screw mounting	M5
Flammability class	UL94 HB
Documentation number	D00095
Weight approx.	≤ 5100 g

Dimension diagrams (dimensions in mm)

IRDH275BM-7

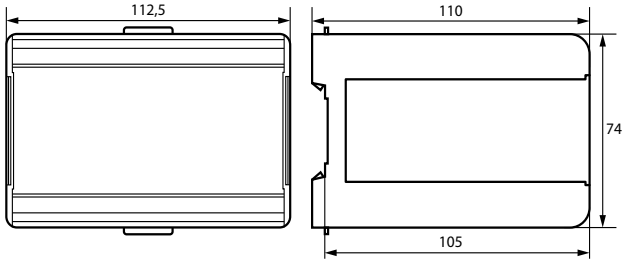

AGH675S-7…

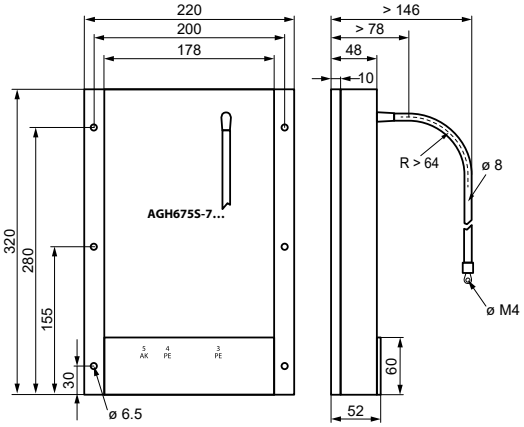

Connection AGH675S-7

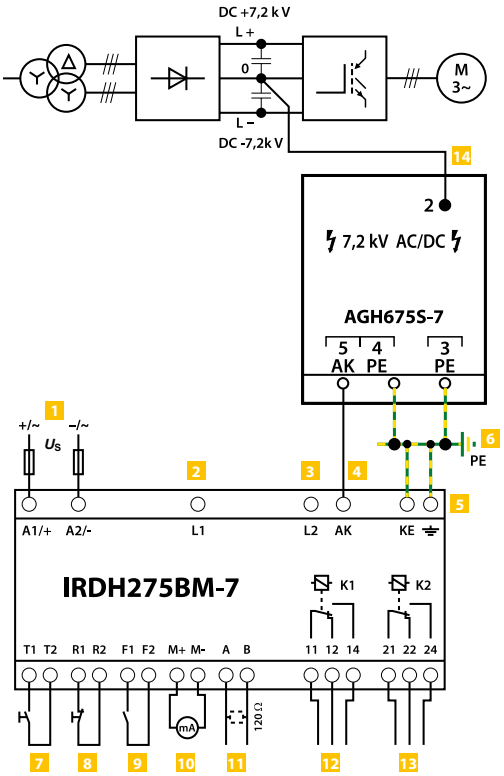

Connection AGH675S-7MV15

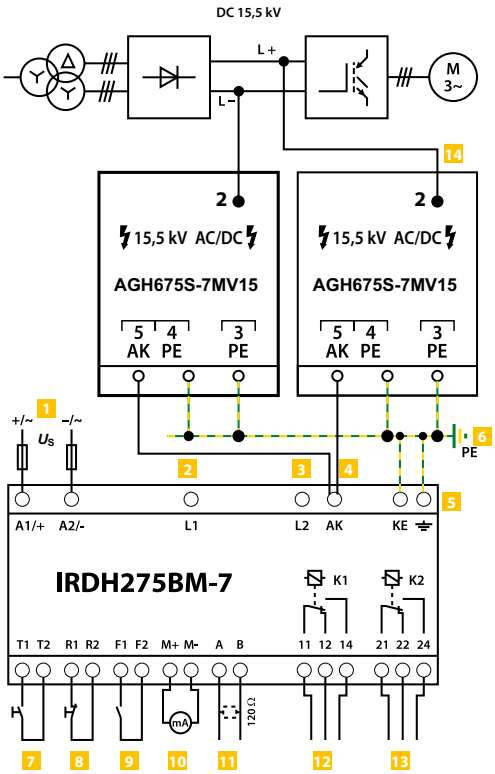

1 Supply voltage U_S (see ordering information) via 6 A fuse

2 3 Terminals L1, L2 are not connected!

4 Connection to the coupling device AGH675S-7 or the two coupling devices AGH675S-7MV15:

Connect terminal AK to terminal(s) 5 of the coupling device AGH675S-7 (or the two coupling devices AGH675S-7MV15),

Connection with standard low-voltage cable, maximum voltage at terminal 5: 200 V

5 Separate connection of ⏚ and KE to PE

6 Separate connection of the terminals 3 and 4 of the AGH675S-7 or AGH675S-7MV15 to PE

7 External TEST button (NO contact)

8 External RESET button (NC contact or wire jumper), when the terminals are open, the fault message will not be stored

9 STANDBY by means of the function input F1, F2: When the contact is closed, insulation measurement does not take place.

10 Current output, galvanically separated: 0…20 mA or 4…20 mA

11 Serial interface RS-485 (termination 120 Ω resistor)

12 Alarm relay 1; changeover contacts provided

13 Alarm relay 2 (system fault relay); changeover contacts provided

14 Connection of the coupling device AGH675S-7 to the converter: connect the high voltage cable encapsulated on one end to the mid-point of the DC intermediate circuit.

Connection of the two coupling devices AGH675S-7MV15 to the converter: connect the high voltage cable encapsulated on L+and L-.

ISOMETER® iso415R-x

Insulation monitoring device for unearthed 3(N)AC, AC and DC systems (IT systems)

BENDER CONNECT

AC/DC

Typical applications

- Unearthed 3(N)AC, AC and DC main and control circuits (IT systems)

Approvals

CE UKCA c UL us LISTED

For UL applications:
Use 60 °C/75 °C copper lines only!

Device features

- Monitoring of the insulation resistance for unearthed 3(N)AC, AC and DC systems with galvanically connected rectifiers
- Automatic adaptation to the system leakage capacitance up to 25 µF
- Response time ≤ 6 s at C_e = 1µF and $R_f = R_{an/2}$
- Automatic device self test with connection monitoring
- Two separately adjustable response value ranges from 5 kΩ…1000 kΩ
- Alarms are output via LEDs (AL1, AL2) and an alarm relay
- Selectable N/C or N/O relay operation [1]
- Selectable start-up delay, response delay and delay on release [1]
- Fault memory [1]
- RS-485 interface with Modbus RTU protocol
- NFC interface

[1] Only adjustable via Modbus RTU or Bender App

Bender Connect App

Download on the App Store

GET IT ON Google Play

Licences

Open source software:
https://www.bender.de/fileadmin/content/Products/t/0/Software-information.pdf

Standards

Devices of the iso415R series have been developed according to the following standards:

- IEC 61557-8

Further information

For further information refer to our product range on www.bender.de.

Ordering information

Type	Supply voltage U_s	Nominal system voltage U_n	Art. No.
iso415R-24	DC 24 V	AC 0…415 V / DC 0…400 V	B71602000
iso415R-2	AC/DC 100…240 V	(3)AC 100…240 V / 3NAC 100…415 V / DC 100…240 V	B71603000

Insulation coordination acc. to IEC 60664-1/IEC 60664-3

Definitions:	
Measuring circuit (IC1)	L1, L2
Control circuit (IC2)	E, KE, +, -, A, B
Output circuit (IC3)	11, 14, 12
Rated voltage	400 V
Overvoltage category	III
Operating altitude	2000 m AMSL
Rated impulse voltage:	
IC1/(IC2-3)	6 kV
IC2/IC3	4 kV
Rated insulation voltage:	
IC1/(IC2-3)	400 V
IC2/IC3	250 V
Pollution degree	2
Protective separation between:	
IC1/(IC2-3)	Overvoltage category III, 600 V
IC2/(IC3)	Overvoltage category III, 300 V
Voltage tests (routine test) acc. to IEC 61010-1	
IC3/(IC1-2)	AC 2.2 kV

Supply voltage

iso415R-24: *Only via galvanically separated power supply (+/–)*

Supply voltage U_s	DC 24 V
Tolerance of U_s	-20…+25 %
Power consumption	≤ 2 W
Inrush current (< 5 ms)	< 10 A

iso415R-2: *Only via the system to be monitored $U_s = U_n$ (L1/L2))*

Monitored IT system iso415R-24

Nominal system voltage U_n	3(N)AC, AC 0…415 V/DC 0…400 V
Tolerance of U_n	AC +15 %, DC +25 %
Frequency range of U_n	DC 42…460 Hz

Monitored IT system iso415R-2

Nominal system voltage $U_n = U_s$	
3(N)AC, AC, DC	100…240 V
Tolerance of U_n	–30 %…+15 %
Frequency range of U_n	DC 42…460 Hz
Power consumption (at 50 Hz)	≤ 2 W / ≤ 3.5 VA
Inrush current (< 2 ms)	< 1.8 A

Measuring circuit

Measuring voltage U_m	±16 V
Measuring voltage I_m at R_F, $Z_F = 0\ \Omega$	≤ 90 µA
Internal resistance R_i, Z_i	≥ 180 kΩ
Permissible system leakage capacitance C_e	≤ 25 µF
Permissible extraneous DC voltage U_{fg}	≤ 500 V

Response values

Response value R_{an1}	10…1000 kΩ (40 kΩ)*
Response value R_{an2}	5…700 kΩ (10 kΩ)*
Relative uncertainty R_{an}	±15 % ±2 kΩ
Hysteresis R_{an}	25 %, minimum 1 kΩ

Time response

Response time t_{an} at $R_F = 0.5 \times R_{an}$ and C_e=1 µF	
acc. to IEC 61557-8	≤ 6 s
Start-up delay t [1]	0…1800 s (0 s)*
Response delay t_{on} [1]	0…1800 s (0 s)*
Delay on release t_{off} [1]	0…1800 s (0 s)*
Recovery time	< 0.4 s

Displays, memory

Display	status LED incl. LED bar graph (7 LEDs)
Display range insulation resistance (R_F)	1…1000 kΩ
Measuring range insulation resistance (R_F)	1…10000 kΩ [6]
Operating uncertainty	±15 % ±2 kΩ
Fault memory alarm messages	on/off (off)*

RS-485 interface

Protocol	Modbus RTU
Baud rate [1]	max. 115.2 kbits/s (19.2 kbits/s)*
Parity [1]	even, no, odd (even)*
Stop bits [1]	1/ 2/ auto (auto)*
Cable length (9.6 kbits/s)	≤ 1200 m
Cable: twisted pair [2]	min. J-Y(St)Y 2x0.6
Terminating resistor (external)	120 Ω (0.25 W)
Device address, Modbus RTU [5]	1…247 (100 + SN)*

Switching elements

Switching elements	1 changeover contact
Operating principle [1]	NC operation/NO operation (NO operation)*
Electrical endurance, number of cycles	10000

Contact data acc. to IEC 60947-5-1:

Utilisation category	AC-12	AC-14	DC-12	DC-12	DC-12
Rated operational voltage	230 V	230 V	24 V	110 V	220 V
Rated operational current	5 A	3 A	1 A	0.2 A	0.1 A
Minimum contact rating [3]	1 mA at AC/DC ≥ 10 V				

Connection

Connection type	Push-in
Nominal current	≤ 10 A
Connection properties	
rigid	0.2…1.5 mm² (AWG 24-16)
flexible	0.2…1.5 mm² (AWG 24-16)
with ferrule with plastic sleeve	0.25…0.75 mm²
with ferrule without plastic sleeve [4]	0.75…1.5 mm²

Environment/EMC

EMC	IEC 61326-2-4

Ambient temperatures

Operation	-25…+55 °C
Transport	-40…+85 °C
Storage	-40…+70 °C

Classification of climatic conditions acc. to IEC 60721 (related to temperature and relative humidity)**:**

Stationary use (IEC 60721-3-3)	3K22
Transport (IEC 60721-3-2)	2K11
Long-term storage (IEC 60721-3-1)	1K22

Classification of mechanical conditions acc. to IEC 60721

Stationary use (IEC 60721-3-3)	3M11
Transport (IEC 60721-3-2)	2M4
Long-term storage (IEC 60721-3-1)	1M12

Other

Operating mode	continuous operation
Mounting	cooling slots must be ventilated vertically
Degree of protection, internal components (DIN EN 60529)	IP30
Degree of protection, terminals (DIN EN 60529)	IP20
Enclosure material	polycarbonate
DIN rail mounting acc. to	IEC 60715
Flammability class	UL94 V-0
Documentation number	D00401
Weight	≤ 100 g

( )* Factory setting

1) Configurable via App and Modbus

2) When supplied by or when monitoring systems with a frequency ≥ 200 Hz, the cable must be laid in a shockproof manner.

3) Refers to relays that have not been operated with high contact currents

4) Use crimping pliers similar to CRIMPFOX 6 / Weidmüller PZ6/PZ6/5 only.

5) Factory setting: 100 + last two digits of serial number

6) Resolution/step size 1 kΩ

Dimension diagram (dimensions in mm)

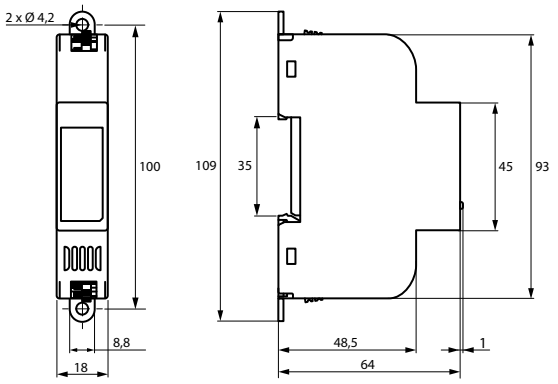

Wiring diagram

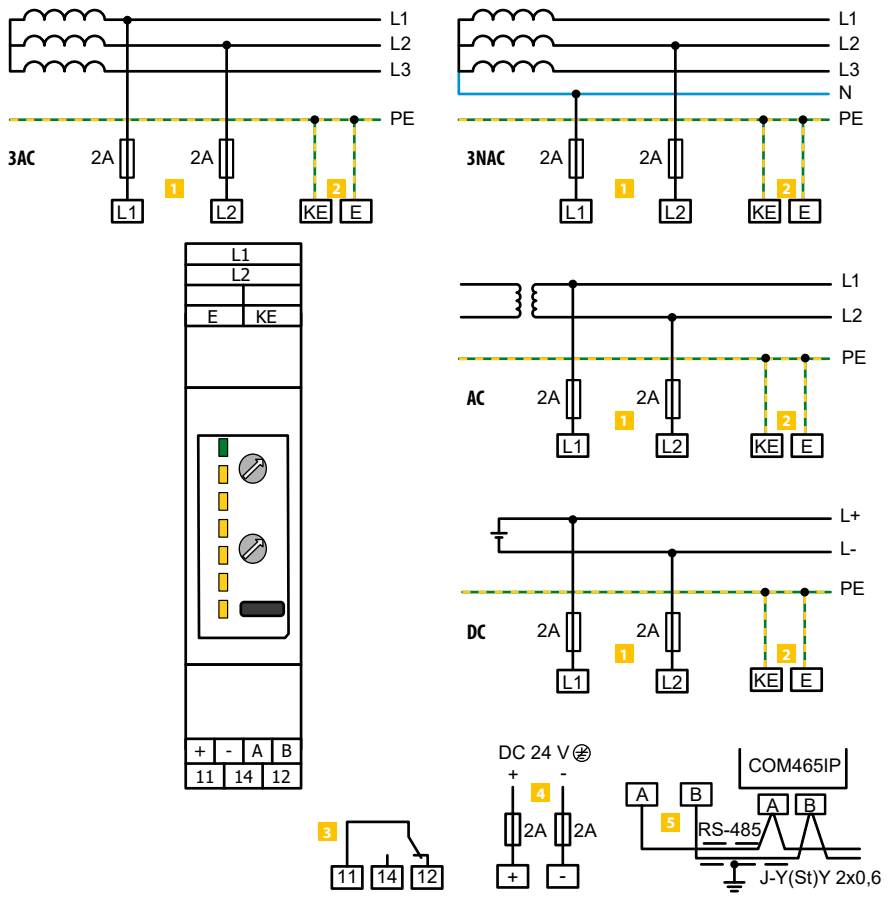

1	**L1, L2**	Connection to the system to be monitored. (U_n) iso415R-2: Supply voltage $U_s = U_n$ (AC/DC 100…240 V)
2	**E, KE**	Earth, Control earth
3	**11,14,12**	Alarm relay K1
4	**+, -**	iso415R-24: floating supply voltage U_s = DC 24 V
5	**A, B**	RS-485 interface

Caution! *Select correct supply voltage!*
Applying an excessive supply voltage Us can destroy the device.
Correct values are:
iso415R-24: U_s = DC 24 V (floating!)
iso415R-2: $U_s = U_n$ = AC/DC 100…240 V

ISOMETER® IR420-D4

Insulation monitoring device for unearthed AC control circuits (IT systems)

AC

Typical applications

- AC control circuits in the industrial sector, mechanical engineering, power plants, elevators, automation systems etc.
- AC control and auxiliary circuits in accordance with DIN EN 60204-1 "Electrical equipment of machines", IEC 60204-1, EN 60204-1
- AC auxiliary circuits in accordance with DIN VDE 0100-725
- Smaller AC IT systems such as lighting systems, mobile generators

Approvals

Device features

- Insulation monitoring for IT control circuits AC 0…300 V
- Two separately adjustable response values
- Preset function (automatic setting of basic parameters)
- Connection monitoring system/earth
- LEDs: Power On, Alarm 1, Alarm 2
- Internal/external test/reset button
- Two separate alarm relays (one changeover contact each)
- N/O or N/C operation, selectable
- Fault memory behaviour, selectable
- Self monitoring with automatic alarm
- Multi-functional LC display
- Adjustable response delay
- Two-module enclosure (36 mm)
- RoHS compliant
- Push-wire terminal (two terminals per connection)

Standards

The ISOMETER® has been developed in compliance with the following standards:

- DIN EN 61557-8 (VDE 0413-8)
- EN 61557-8
- IEC 61557-8
- ASTM F 1207M-96 (2007)

Further information

For further information refer to our product range on www.bender.de.

Ordering information

Type	Supply voltage [1] U_s	Art. No.	
		Screw-type terminal	Push-wire terminal
IR420-D4-1	DC 9,6…94 V / AC 16…72 V, 42…460 Hz	B91016409	B71016409
IR420-D4-2	DC 70…300 V / AC 70…300 V, 42…460 Hz	B91016405	B71016405

[1] Absolute values

Accessories

Description	Art. No.
Mounting clip for screw mounting (1 piece per device)	B98060008

Insulation coordination acc. to IEC 60664-1/IEC 60664-3

Rated insulation voltage	250 V
Rated impulse voltage/pollution degree	4 kV/3
Protective separation (reinforced insulation) between	(A1, A2) - (L1, L2, E, KE, T/R) - (11, 12, 14) - (21, 22, 24)
Voltage test acc. to IEC 61010-1	2.21 kV

Supply voltage

IR420-D4-1:	
Supply voltage U_s	AC 16…72 V / DC 9.6…94 V
Frequency range U_s	42…460 Hz / DC
IR420-D4-2:	
Supply voltage U_s	AC/DC 70…300 V
Frequency range U_s	42…460 Hz, DC
Power consumption	≤ 4 VA

IT system being monitored

Nominal system voltage U_n	AC 0…300 V
Nominal frequency f_n	42…460 Hz

Response values

Response value R_{an1} (Alarm 1)	1…200 kΩ
Response value R_{an2} (Alarm 2)	1…200 kΩ
PreSet mode	
U_n ≤ 72 V R_{an1} (Alarm 1)/R_{an2} (Alarm 2)	20 kΩ/10 kΩ
U_n > 72 V R_{an1} (Alarm 1)/R_{an2} (Alarm 2)	46 kΩ/23 kΩ
Relative uncertainty 1…5 kΩ/5…200 kΩ	± 0.5 kΩ/± 15 %
Hysteresis 1…5 kΩ/5…200 kΩ	+ 1 kΩ/+25 %

Time response

Response time t_{an} at R_F = 0.5 x R_{an} and C_e = 1 µF	≤ 1 s
Start-up delay (start time) t	0…10 s (0 s)*
Response delay t_{on}	0…99 s (0 s)*

Measuring circuit

Measuring voltage U_m	±12 V
Measuring current I_m (at R_F = 0 Ω)	≤ 200 µA
Internal DC resistance R_i	≥ 62 kΩ
Impedance Z_i at 50 Hz	≥ 60 kΩ
Permissible extraneous DC voltage U_{fg}	≤ DC 300 V
Permissible system leakage capacitance C_e	≤ 20 µF

Displays, memory

Display	LC display, multi-functional, non-illuminated
Display range, measured value	1 kΩ…1 MΩ
Operating uncertainty 1…5 kΩ/5 kΩ…1 MΩ	± 0.5 kΩ/± 15 %
Password	off/0…999 (off)*
Fault memory, alarm relay	on/off*

Inputs

Cable length test and reset button	≤ 10 m

Switching elements

Number of switching elements	2 (changeover contact K1, K2)
Operating principle	N/C / N/O operation (N/O operation)*
Electrical service life, number of cycles	10000

Contact data acc. to IEC 60947-5-1

Utilisation category	AC-13	AC-14	DC-12	DC-12	DC-12
Rated operational voltage	230 V	230 V	220 V	110 V	24 V
Rated operational current	5 A	3 A	0.1 A	0.2 A	1 A
Minimum contact rating	1 mA at AC/DC ≥ 10 V				

Environment/EMC

EMC	IEC 61326-2-4
Operating temperature	-25…+55 °C

Classification of climatic conditions acc. to IEC 60721 (related to temperature and relative humidity)**:**

Stationary use (IEC 60721-3-3)	3K22
Transport (IEC 60721-3-2)	2K11
Long-time storage (IEC 60721-3-1)	1K22

Classification of mechanical conditions IEC 60721

Stationary use (IEC 60721-3-3)	3M11
Transport (IEC 60721-3-2)	2M4
Long-time storage (IEC 60721-3-1)	1M12

Connection

Connection type	screw-type terminal or push-wire terminal
Connection	**screw terminals**
Connection properties	
rigid	0.2…4 mm² (AWG 24-12)
flexible	0.2…2.5 mm² (AWG 24-14)
Two conductors with the same cross section	
rigid/flexible	0.2…1.5 mm² (AWG 24-16)
Stripping length	8…9 mm
Tightening torque, terminal screws	0.5…0.6 Nm
Connection	**push-wire terminals**
Connection properties	
rigid	0.2…2.5 mm² (AWG 24-14)
flexible	
without ferrules	0.75…2.5 mm² (AWG 19-14)
with ferrules	0.2…1.5 mm² (AWG 24-16)
Stripping length	10 mm
Opening force	50 N
Test opening, diameter	2.1 mm

Other

Operating mode	continuous operation
Mounting	any position
Degree of protection, internal components (DIN EN 60529)	IP30
Degree of protection, terminals (DIN EN 60529)	IP20
Enclosure material	polycarbonate
Flammability class	UL94 V-0
DIN rail mounting acc. to	IEC 60715
Screw mounting	2 x M4 with mounting clip
Documentation number	D00037
Weight	≤ 150 g

( )* = factory setting

Dimension diagram (dimensions in mm)

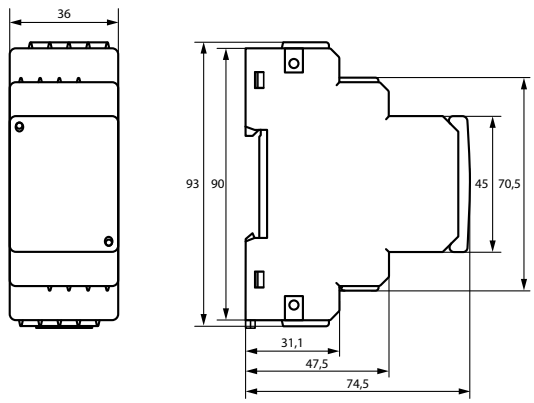

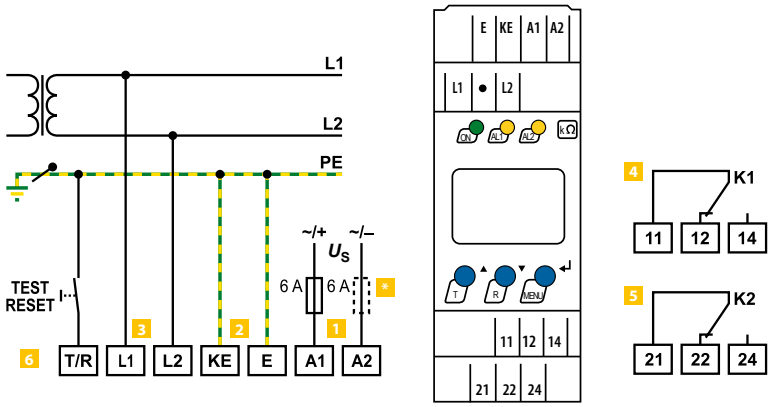

1	**A1, A2**	Supply voltage U_S (see ordering details) via fuse
2	**E, KE**	Separate connection of E, KE to PE
3	**L1, L2**	Connection of the AC system to be monitored: AC: connect terminals L1, L2 to conductor L1, L2.
4	**11, 12, 14**	Alarm relay K1: Alarm 1
5	**21, 22, 23**	Alarm relay K2: Alarm 2
6	**T/R**	Combined test and reset button "T/R": short-time pressing (< 1.5 s) = RESET, long-time pressing (> 1.5 s) = TEST

* Line protection by a fuse in accordance with IEC 60364-4-43 (6 A fuse recommended). In case of supply (A1/A2) from an IT system, both lines have to be protected by a fuse.

ISOMETER® IR425

Insulation monitoring device for unearthed AC/DC control circuits (IT systems)

AC/DC

Typical applications

- AC/DC control circuits in the industrial sector, mechanical engineering, power plants, elevators, automation systems etc.
- AC/DC control and auxiliary circuits in accordance with DIN EN 60204-1 "Electrical equipment of machines", IEC 60204-1, EN 60204-1
- AC/DC auxiliary circuits in accordance with DIN VDE 0100-725 (VDE 0100-725)
- Smaller AC/DC IT systems such as lighting systems

Approvals

Device features

- Insulation monitoring for AC/DC control circuits 0…300 V
- Two separately adjustable response values
- Preset function (automatic setting of basic parameters)
- Connection monitoring system/earth
- LEDs: Power On, Alarm 1, Alarm 2
- Information about the point of fault L+/L-via display
- Internal/external test/reset button
- Two separate alarm relays (one changeover contact each)
- N/O or N/C operation, selectable
- Fault memory behaviour, selectable
- Self monitoring with automatic alarm
- Multi-functional LC display
- Adjustable response delay
- Two-module enclosure (36 mm)
- Push-wire terminal (two terminals per connection)

Standards

The ISOMETER® has been developed in compliance with the following standards:

- DIN EN 61557-8 (VDE 0413-8)
- IEC 61557-8
- ASTM F 1669M-96

Further information

For further information refer to our product range on www.bender.de.

Ordering information

Type	Supply voltage [1] U_s	Art. No.	
		Screw-type terminal	Push-wire terminal
IR425-D4-1	DC 9.6…94 V AC 16…72 V, 15…460 Hz	B91036403	B71036403
IR425-D4W-1		B91036403W	B71036403W
IR425-D4-2	DC 70…300 V AC 70…300 V, 15…460 Hz	B91036402	B71036402
IR425-D4W-2		B91036402W	B71036402W

[1] Absolute values

Accessories

Description	Art. No.
Mounting clip for screw mounting (1 piece per device)	B98060008

Insulation coordination acc. to IEC 60664-1/IEC 60664-3

Rated insulation voltage	250 V
Rated impulse voltage/Pollution degree	4 kV/3
Protective separation (reinforced insulation) between:	
	(A1, A2) - (L1, L2, E, KE, T/R) - (11, 12, 14) - (21, 22, 24)
Voltage test acc. IEC 61010-1	2.2 kV

Supply voltage

IR425-D4-1, IR425-D4W-1:	
Supply voltage U_s	AC 16…72 V/DC 9.6…94 V
Frequency range U_s	15…460 Hz/DC
IR425-D4-2, IR425-D4W-2:	
Supply voltage U_s	AC/DC 70…300 V
Frequency range U_s	15…460 Hz, DC
Power consumption	≤ 4 VA

IT System being monitored

Nominal system voltage U_n	AC/DC 0… 300 V
Nominal frequency f_n	15…460 Hz

Response values

Response value R_{an1} (ALARM 1)	1…200 kΩ
Response value R_{an1} (ALARM 2)	1…200 kΩ
Preset function:	
$U_n \leq 72$ V: R_{an1} (ALARM 1)/R_{an2} (ALARM 2)	20 kΩ/10 kΩ
$U_n > 72$ V: R_{an1} (ALARM 1)/R_{an2} (ALARM 2)	46 kΩ/23 kΩ
Operating error (1…5 kΩ)/(5…200 kΩ)	±0.5 kΩ/±15 %
Hysteresis (1…5 kΩ)/(5…200 kΩ)	+1 kΩ/+25 %

Time response

Response time t_{an} at $R_F = 0{,}5 \times R_{an}$ and $C_e = 1$ µF	≤ 2 s
Starting delay t	0…10 s
Response delay t_{on}	0…99 s

Measuring circuit

Measuring voltage U_m	±12 V
Measuring current I_m ($R_F = 0$ Ω)	≤ 200 µA
Internal d.c. resistance R_i	≥ 62 kΩ
Internal impedance Z_i (50 Hz)	≥ 60 kΩ
Admissible extraneous d.c. voltage U_{fg}	≤ DC 300 V
System leakage capacitance C_e	≤ 20 µF

Displays, memory

Display	LC display, multi-functional, non-illuminated
Display range, measuring value	1 kΩ…1 MΩ
Operating error (1…5 kΩ)	±0.5 kΩ
Percentage operating error (5 kΩ…1 MΩ)	±15 %
Password	off/0…999
Fault memory (alarm relay)	on/off

Inputs

Cable length external test/reset button	≤ 10 m

Switching elements

Number of	2 (changeover contacts K1, K2)
Operating principle	(N/O operation)(N/C operation)
Electrical endurance	10000 switching operations

Contact data according IEC 60947-5-1

Utilization category	AC-13	AC-14	DC-12	DC-12	DC-12
Rated operational voltage	230 V	230 V	220 V	110 V	24 V
Rated operational current	5 A	3 A	0.1 A	0.2 A	1 A
Minimum current	1 mA at AC/DC ≥ 10 V				

Environment/EMC

EMC	acc. to IEC 61326
Operating temperature	-25…+55 °C

Classification of climatic conditions acc. to IEC 60721 (related to temperature and relative humidity)**:**

Stationary use (IEC 60721-3-3)	3K22
Transport (IEC 60721-3-2)	2K11
Storage (IEC 60721-3-1)	1K22

Classification of mechanical conditions acc. to IEC 60721:

Stationary use (IEC 60721-3-3)	3M11
for W variant	3M12
Transport (IEC 60721-3-2)	2M4
Storage (IEC 60721-3-1)	1M12

Connection

Connection type	screw-type terminal or push-wire terminal
Connection	**screw terminals**
Connection properties	
rigid	0.2…4 mm² (AWG 24-12)
flexible	0.2…2.5 mm² (AWG 24-14)
Two conductors with the same cross section	
rigid/flexible	0.2…1.5 mm² (AWG 24-16)
Stripping length	8…9 mm
Tightening torque, terminal screws	0.5…0.6 Nm
Connection	**push-wire terminals**
Connection properties	
rigid	0.2…2.5 mm² (AWG 24-14)
flexible	
without ferrules	0.75…2.5 mm² (AWG 19-14)
with ferrules	0.2…1.5 mm² (AWG 24-16)
Stripping length	10 mm
Opening force	50 N
Test opening, diameter	2.1 mm

Other details

Operating mode	continuous
Position	any position
Degree of protection internal components (EN 60529)	IP30
Degree of protection terminals (EN 60529)	IP20
Enclosure material	polycarbonat
Flammability class	UL94 V-0
DIN rail mounting acc. to	IEC 60715
Screw fixing	2 x M4 with mounting clip
Weight	approx. 150 g

Dimension diagram (dimensions in mm)

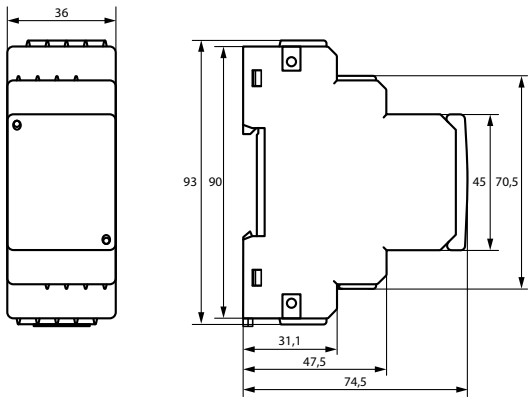

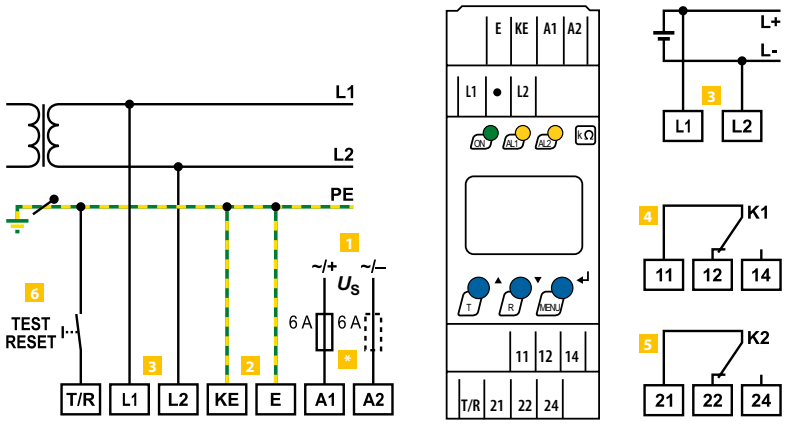

1	**A1, A2**	Supply voltage U_S (see ordering details) via fuse
2	**KE, E**	Separate connection of E, KE to PE
3	**L1, L2**	Connection to the IT system to be monitored
4	**11, 12, 14**	Alarm relay K1: Alarm 1
5	**21, 22, 24**	Alarm relay K2: Alarm 2
6	**T/R**	Combined test and reset button: short-time pressing (< 1.5 s) = RESET long-time pressing (> 1.5 s) = TEST

* Line protection by a fuse in accordance with IEC 60364-4-43 (6 A fuse recommended). In case of supply (A1/A2) from an IT system, both lines have to be protected by a fuse.

ISOMETER® iso1685DP/isoHV1685D/isoLR1685DP

Insulation monitoring device for unearthed AC, AC/DC and DC power supplies (IT systems)

AC/DC | PV

Typical applications

- Extensive systems up to AC 1000 V/ DC 1500 V which are designed as IT systems

Approvals

CE UKCA

Device features

ISOMETER® for AC IT systems with galvanically connected rectifiers or inverters and for DC IT systems. (IT = unearthed systems)

- Automatic adjustment to high system leakage capacitances
- Combination of ***AMP***^{Plus} and other profile-specific measurement method
- Separately adjustable response values R_{an1} (alarm 1) and R_{an2} (alarm 2) for prewarning and alarm
- High-resolution graphic LC display for excellent readability and recording of the device status
- Connection monitoring
- Automatic device self test with automatic alarm message in the event of a fault
- Graphical representation of the insulation resistance over time (isoGraph)
- History memory with real-time clock (buffer for 13 days) for storing 1023 alarm messages with date and time
- Freely programmable digital inputs
- Remote setting of certain parameters via the Internet (COMTRAXX® gateway)
- Remote diagnosis by the Bender service via the Internet
- RS-485 interface for data exchange with other Bender devices

iso1685DP-425

- Measurement of insulation faults 200 Ω…1 MΩ
- Integrated locating current injector up to 50 mA for insulation fault location
- Display of insulation faults selectively located by EDS systems
- Parameter setting of EDS systems
- Customer-specific texts for each measuring channel via the menu

isoLR1685DP-425

- Measurement of low-resistance insulation faults 20 Ω…100 kΩ
- Integrated locating current injector up to 50 mA for insulation fault location
- Display of insulation faults selectively located by EDS systems
- Parameter setting of EDS systems
- Customer-specific texts for each measuring channel via the menu

isoHV1685D-425

- Measurement of insulation faults 200 Ω…1 MΩ in IT systems with mains voltages of AC 2000 V and DC 3000 V

Standards

The isoxx1685Dx devices were designed according to the following standards:

- DIN EN 61557-8 (VDE 0413-8)
- IEC 61557-8
- IEC 61557-8 Annex C (for Fast 2000 µF profile only)
- DIN EN 61557-9 (VDE 0413-9)
- IEC 61557-9 (not for isoHV1685D)
- IEC 61326-2-4
- DIN EN 60664-1 (VDE 0110-1)

Further information

For further information refer to our product range on www.bender.de.

Ordering information

Type	Supply voltage [1]	Response value range	Nominal voltage	Art. No.
isoLR1685DP-325	DC 18…30 V	20 Ω…100 kΩ	AC 0…690 V / DC 0…690 V	B91065803
isoHV1685D-425		200 Ω…1 MΩ	AC 0…2000 V / DC 0…3000 V	B91065805
iso1685DP-425			AC 0…1000 V / DC 0…1500 V	B91065802

[1] Absolutwerte

Insulation coordination acc. to IEC 60664-1/IEC 60664-3

Definitions:	
Measuring circuit (IC1)	(L1/+, L2/-), (E, KE)
Supply circuit (IC2)	A1, A2
Output circuit 1 (IC3)	11, 12, 14
Output circuit 2 (IC4)	21, 22, 24
Output circuit 3 (IC4)	31, 32, 34
Control circuit (IC6)	(A, B), (I1+, I1-, I2+, I2-)
Rated voltage [for isoHV1685D]	1500 V [3000 V]
Overvoltage category	III
Rated impulse voltage:	
IC1 / (IC2-5) [for isoHV1685D]	8 kV [16.670 kV]
IC2 / (IC3-5)	4 kV
IC2 / IC1+IC6	800 V
IC3 / (IC4-6)	4 kV
IC4 / (IC5-6)	4 kV
IC5 / IC6	4 kV
Rated insulation voltage:	
IC1 / (IC2-6) [for isoHV1685D]	1500 V [3000 V]
IC2 / (IC3-5)	250 V
IC2 / IC6	50 V
IC3 / (IC4-6)	250 V
IC4 / (IC5-6)	250 V
IC5 / IC6	250 V
Pollution degree	3
Safe isolation (reinforced insulation) between:	
IC1 / (IC2-5) [for isoHV1685D]	overvoltage category III, 1500 V [3000 V]
IC2 / (IC3-5)	Overvoltage category III, 300 V
IC2 / IC6	Overvoltage category III, 50 V
IC3 / (IC4-6)	Overvoltage category III, 300 V
IC4 / (IC5-6)	Overvoltage category III, 300 V
IC5 / IC6	Overvoltage category III, 300 V
Voltage test (routine test) acc. to IEC 61010-1:	
IC2 / (IC3-5)	AC 2.2 kV
IC2 / IC6	DC ±0.50 kV
IC3 / (IC4-6)	AC 2.2 kV
IC4 / (IC5-6)	AC 2.2 kV
IC5 / IC6	AC 2.2 kV

Voltage ranges

Nominal system voltage range U_n	
iso1685DP	AC 0…1000 V; DC 0…1500 V
isoHV1685D	AC 0…2000 V; DC 0…3000 V
isoLR1685DP	AC 0…690 V; DC 0…690 V
Tolerance of U_n	AC +10 %/DC +5%
Frequency range of U_n	DC 0.1…460 Hz
Supply voltage U_s (see also device nameplate)	DC 18…30 V
Frequency range of U_s	DC
Power consumption	≤ 9 W

Measuring circuit for insulation monitoring

Measuring voltage U_m (peak value)	±50 V
Measuring current I_m (at $R_F = 0\ \Omega$)	≤ 0.7 mA
Measuring current I_m isoLR1685DP (at $R_F = 0\ \Omega$)	≤ 3.5 mA
Internal DC resistance R_i	
iso1685DP	≥ 70 kΩ
isoHV1685D (two-pole coupling)	≥ 210 kΩ
isoHV1685D (single-pole coupling)	≥ 420 kΩ
isoLR1685DP	≥ 15 kΩ [1)]
Impedance Z_i at 50 Hz	
iso1685DP	≥ 70 kΩ
isoHV1685D (two-pole coupling)	≥ 210 kΩ
isoHV1685D (single-pole coupling)	≥ 420 kΩ
isoLR1685DP	≥ 15 kΩ [1)]
Permissible extraneous DC voltage U_{fg}	
iso1685DP	≤ DC 1600 V
isoHV1685D	≤ DC 3150 V
isoLR1685DP	≤ DC 720 V
Permissible system leakage capacitance C_e	profile-dependent, 0…2000 µF

[1)] for U_n > 500 V no longer acc. to IEC61557-8

Response values for insulation monitoring

Response value R_{an1} (Alarm 1) and R_{an2} (Alarm 2)	200 Ω…1 MΩ
Response value R_{an1} (Alarm 1) and R_{an2} (Alarm 2) isoLR1685DP	20 Ω…100 kΩ
Condition response value	$R_{an1} \geq R_{an2}$
Upper limit of the measuring range for setting for measurement profile "Fast"	
C_{emax} = 2000 µF (isoxx1685DP only)	50 kΩ
Upper limit of the measuring range for setting for measurement profile "High capacity"	
C_{emax} = 500 µF	200 kΩ
Relative uncertainty iso1685DP	
(10 kΩ…1 MΩ) (acc. to IEC 61557-8)	±15 %
(0.2 kΩ…< 10 kΩ)	±200 Ω ±15 %
Relative uncertainty isoHV1685D	
(10 kΩ…1 MΩ) (acc. to IEC 61557-8)	±15 %
(0.2 kΩ…< 10 kΩ)	±1 kΩ ±15 %
Relative uncertainty isoLR1685DP	
(1 kΩ…100 kΩ) (acc. to IEC 61557-8)	±15 %
(20 Ω…< 1 kΩ)	±20 Ω ±15 %
Hysteresis	25 %

Time response

Response time t_{an} at $R_F = 0.5 \times R_{an}$ (R_{an}= 10 kΩ) and C_e= 1 µF acc. to IEC 61557-8	profile-dependent, typ. 10 s

Measuring circuit for insulation fault location (EDS) (isoxx1685DP)

Locating current I_L DC	≤ 50 mA (1/2,5/5/10/25/50 mA)
Test cycle/pause	2 s/4 s

Display

Display	Graphic display 127 x 127 pixel, 40 x 40 mm
Display range measured value	200 Ω…50 MΩ
Display range measured value isoLR1685DP	20 Ω…1 MΩ

LEDs

ON (operation LED)	green
PGH ON	yellow
SERVICE	yellow
ALARM 1	yellow
ALARM 2	yellow

Digital inputs

Operating mode, adjustable	active high, active low
Functions	off, test, reset, deactivate device, insulation fault location
High level	10…30 V
Low level	0…0.5 V

Serial interface

Interface/protocol	RS-485/BMS/Modbus RTU
Connection	terminals A/B
Cable length	≤ 1200 m
Shielded cable (shield to functional earth on one end)	2-core, ≥ 0.6 mm2, e.g. J-Y(St)Y 2x0.6
Shield	terminal S
Terminating resistor, can be connected (Term. RS-485)	120 Ω (0.5 W)
Device address, BMS bus	(1) 2…90 (2)
Device address, Modbus RTU	1 - 247
Baud rate	9.6 / 19.2 / 38.4 / 57.6 / 115 kB
Parity	even / odd
Stop bits	1 / 2 / auto

Connection (except mains connection)

Connection type	pluggable push-wire terminals
Connection, rigid/flexible	0.2…2.5 mm²/0.2…2.5 mm²
Connection, flexible with ferrule, without/with plastic sleeve	0.25…2.5 mm²
Conductor sizes	AWG 24-12

Mains connection

Connection type	pluggable push-wire terminals
Connection, rigid/flexible	0.2…10 mm²/0.2…6 mm²
Connection, flexible with ferrule, without/with plastic sleeve	0.25…6 mm²/0.25…4 mm²
Conductor sizes	AWG 24-8
Stripping length	15 mm
Opening force	90…120 N

Switching elements

Switching elements	3 changeover contacts:
K1	insulation fault alarm 1
K2	insulation fault alarm 2
K3	device error
Operating principle K1, K2	N/C operation or N/O operation
Operating principle K3	N/C operation, cannot be changed
Electrical endurance under rated operating conditions, number of cycles	100,000

Contact data acc. to IEC 60947-5-1:

Utilisation category	AC 13 / AC 14 / DC-12 / DC-12 / DC-12
Rated operational voltage	230 V / 230 V / 4 V / 10 V / 20 V
Rated operational current	5 A / 3 A / 1 A / 0.2 A / 0.1 A
Rated insulation voltage	250 V
Minimum contact rating	1 mA at AC/DC ≥ 10 V

Environment/EMC

EMC	IEC 61326-2-4

Classification of climatic conditions acc. to IEC 60721:

Stationary use (IEC 60721-3-3)	3K22
Transport (IEC 60721-3-2)	2K11
Long-term storage (IEC 60721-3-1)	1K22

Classification of mechanical conditions acc. to IEC 60721:

Stationary use (IEC 60721-3-3)	3M11
Transport (IEC 60721-3-2)	2M4
Long-term storage (IEC 60721-3-1)	1M12

Deviation from the classification of climatic conditions:

Ambient temperature during operation iso1685DP, isoLR1685DP	-40…+70 °C
Ambient temperature during operation isoHV1685D	-40…+55 °C
Ambient temperature transport	-40…+80 °C
Ambient temperature long-term storage	-25 …+80 °C
Area of application	≤ 3000 m AMSL

Other

Operating mode	continuous operation
Position of normal use	vertical, mains connection on top
Tightening torque of the screws (4x M5) for enclosure mounting	1.0…1.5 Nm
Degree of protection, internal components	IP30
Degree of protection, terminals	IP30
Enclosure material	polycarbonate
Flammability class	V-0
Weight	≤ 1600 g

Dimension diagram (dimensions in mm)

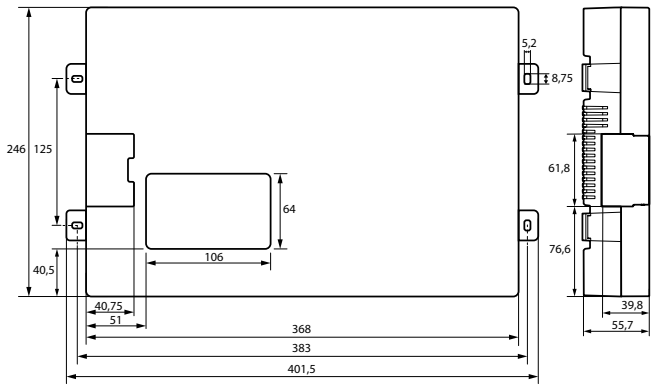

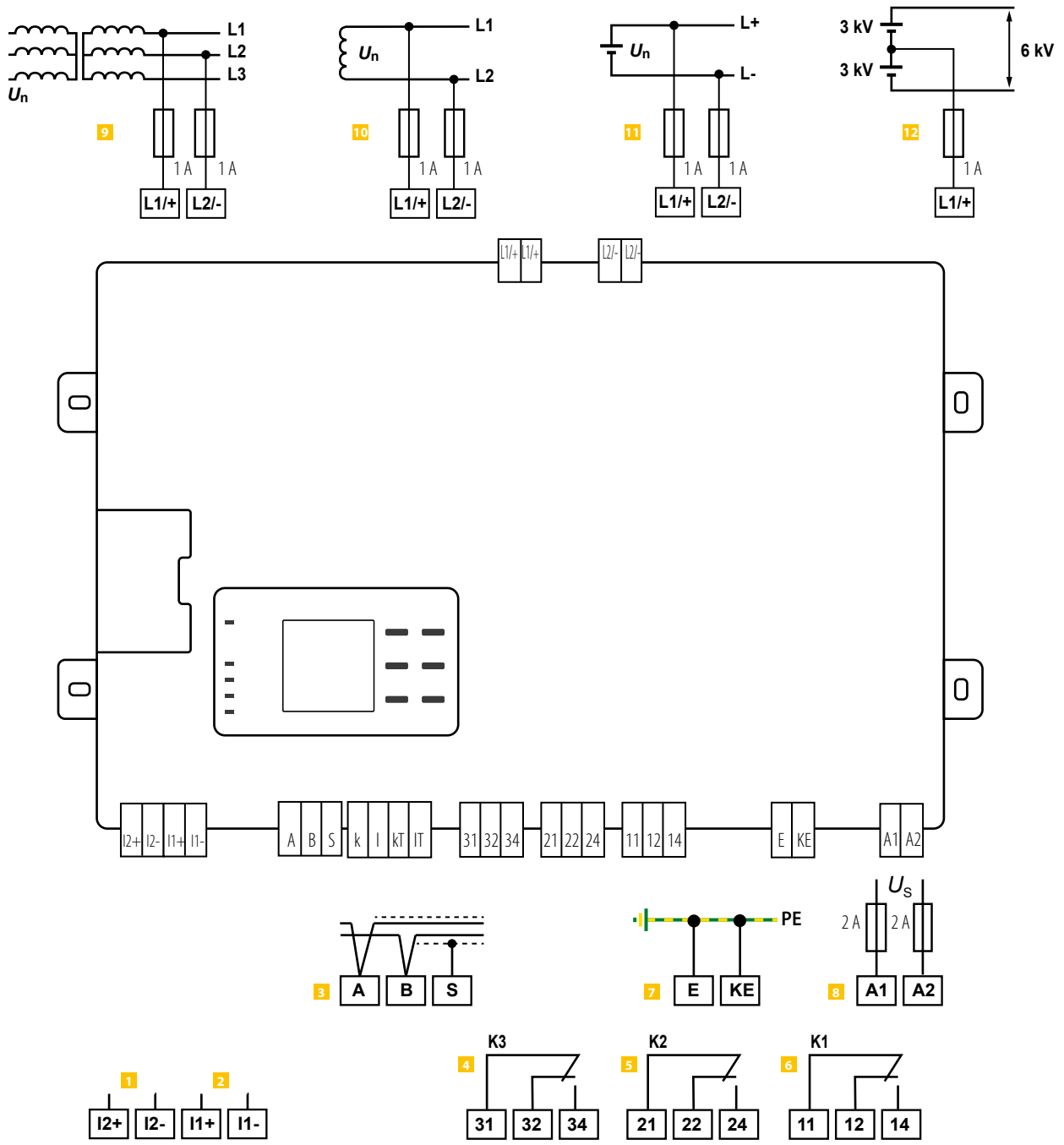

1	**I2+, I2–**	Standby, digital input
2	**I1+, I1–**	Test, digital input
3	**A, B, S**	Connection to BMS bus, RS-485, S = shield (connect one end to PE), can be terminated with S700
4	**31, 32, 34**	Alarm relay K3 for internal device errors
5	**21, 22, 24**	Alarm relay K2 for insulation faults alarm 2
6	**11, 12, 14**	Alarm relay K1 for insulation faults alarm 1
7	**E,KE**	Separate connections of E and KE to PE
8	**A1, A2**	Connection to U_S = DC 24 V via fuses, 2 A each
9	**L1/+, L2/-**	Connection isoxx1685xx to 3AC
10	**L1/+, L2/-**	Connection isoxx1685xx to AC
11	**L1/+, L2/-**	Connection isoxx1685xx to DC
12	**L1/+, L2/-**	Connection isoHV1685xx to DC with center tap

ISOMETER® isoHR1685DW–925

Insulation monitoring device for mobile, insulated elevating work platforms

AC/DC

Typical applications

- Isolationsüberwachung von Hubarbeitsbühnen/Oberleitungs-fahrzeugen.

Approvals

CE UK CA

Device features

ISOMETER® for mobile, insulated elevating work platforms

- Continuous monitoring of both insulation levels on elevating work platforms, also during operation
- Storage of data for verification of insulation condition. Where necessary, provision of documentary verification following a electrical accident
- Graphical representation of the insulation resistance over time (isoGraph)
- RS-485 interface with BMS protocol and Modbus RTU for forwarding data, alarms and acknowledgements via existing communication to work platform
- History memory with real-time clock (13-day buffer) for storing 1023 alarm messages with date and timestamp
- Freely programmable digital inputs
- Automatic device self-test with automatic message in the event of a fault
- Connection monitoring
- Separately adjustable response values R_{an1} (alarm 1) and R_{an2} (alarm 2) for prewarning and alarm
- High-resolution graphic LC display, for excellent readability and recording of the device status
- Measurement of high-resistance insulation faults 100 kΩ…20 GΩ
- Automatic adjustment to high system leakage capacitances

Standards

The ISOMETER® has been developed in compliance with the following standards:

- DIN EN 61557-8 (VDE 0413-8)
- IEC 61557-8
- IEC 61326-2-4
- DIN EN 60664-1 (VDE 0110-1)

Further information

For further information refer to our product range on www.bender.de.

Ordering information

Type	Supply voltage [1]	Response value range	Nominal system voltage	Art. No.
isoHR1685DW-925	DC 18…30 V	100 kΩ…100 MΩ	AC 0…1000 V / DC 0…1500 V	B91065806W

[1] Absolute values

Insulation coordination acc. to IEC 60664-1/IEC 60664-3

Definitions:	
Measuring circuit (IC1)	(L1/+, L2/-), (E, KE)
Supply circuit (IC2)	A1, A2
Output circuit 1 (IC3)	11, 12, 14
Output circuit 2 (IC4)	21, 22, 24
Output circuit 3 (IC4)	31, 32, 34
Control circuit(IC6)	(A, B), (I1+, I1-, I2+, I2-)
Rated voltage	1500 V
Overvoltage category	III
Rated impulse voltage:	
IC1/(IC2-5)	10 kV
IC2/(IC3-5)	4 kV
IC2/IC1+IC6	800 V
IC3/(IC4-6)	4 kV
IC4/(IC5-6)	4 kV
IC5/IC6	4 kV
Rated insulation voltage:	
IC1/(IC2-6)	1500 V
IC2/(IC3-5)	250 V
IC2/IC6	50 V
IC3/(IC4-6)	250 V
IC4/(IC5-6)	250 V
IC5/IC6	250 V
Pollution degree	3
Protective separation (reinforced insulation) between:	
IC1/(IC2-5)	Overvoltage category III, 1500 V
IC2/(IC3-5)	Overvoltage category III, 300 V
IC2/IC6	Overvoltage category III, 50 V
IC3/(IC4-6)	Overvoltage category III, 300 V
IC4/(IC5-6)	Overvoltage category III, 300 V
IC5/IC6	Overvoltage category III, 300 V
Voltage test (routine test) as per IEC 61010-1:	
IC2/(IC3-5)	AC 2.2 kV
IC2/IC6	DC ±0.50 kV
IC3/(IC4-6)	AC 2.2 kV
IC4/(IC5-6)	AC 2.2 kV
IC5/IC6	AC 2.2 kV

Voltage ranges

Nominal system voltage range U_n	AC 0…1000 V DC 0…1500 V
Tolerance of U_n	AC +10 %/DC +5 %
Frequency range of U_n	DC 0.1…460 Hz
Supply voltage U_s (also see device name plate)	DC 18…30 V
Frequency range of U_s	DC
Power consumption	≤ 9 W

Measuring circuit for insulation monitoring

Measuring voltage U_m (peak value)	± 50 V
Measuring current I_m (at $R_F = 0\ \Omega$)	≤ 1 µA
Internal resistance DC R_i	≥ 50 MΩ
Impedance Z_i at 50 Hz	≥ 50 MΩ
Permissible extraneous DC voltage U_{fg}	≤ DC 1600 V
Permissible system leakage capacitance C_e isoHR1685DW-925	profile-dependent, 0…1 µF

Response values for insulation monitoring

Response value R_{an1} (alarm 1) and R_{an2} (alarm 2)	100 kΩ…100 MΩ
Response value condition	$R_{an1} \geq R_{an2}$
Upper limit of the measuring range when setting measuring profile to "high capacity"$C_{emax} = 5$ µF	24 MΩ
Relative uncertainty (acc. to IEC 61557-8)	±15 %
100 kΩ…10 MΩ	±200 kΩ ±15 %
Hysteresis	25 %

Time response

Response time t_{an} at $R_F = 0.5 \times R_{an}$ (R_{an}= 100 kΩ) and C_e= 1 µF acc. to IEC 61557-8	profile-dependent, typ. 10 s

Display

Display	graphic display 127 x 127 pixels, 40 x 40 mm
Display range, measured value	100 kΩ…20 GΩ

LEDs

ON (operation LED)	green
PGH ON (no function)	yellow
SERVICE	yellow
ALARM 1	yellow
ALARM 2	yellow

Digital inputs

Operating mode, variable	active high, active low
Functions	off, test, reset, disable device, insulation fault location
High level	10…30 V
Low level	0…0.5 V

Serial interface

Interface/Protocol	RS-485/BMS/Modbus RTU
Connection	Terminals A/B
Cable length	≤ 1200 m
Shielded cable (shield to functional earth on one side)	2-core, ≥ 0.6 mm², e.g. J-Y(St)Y 2x0.6
Shield	Terminal S
Terminating resistance, engageable (term. RS-485)	120 Ω (0.5 W)
Device address, BMS bus	(1) 2…90 (2)*
Device address, Modbus RTU	1 – 247
Baud rate	9.6/19.2/38.4/57.6/115 kB
Parity	even/uneven
Stop bits	1/2/auto

Connection (except mains coupling)

Type of connection	Pluggable push-wire terminals
Connection, rigid/flexible	0.2…2.5 mm²/0.2…2.5 mm²
Connection, flexible with ferrule, without/with plastic sleeve	0.25…2.5 mm²
Conductor sizes	AWG 24-12

Connection of the mains coupling

Type of connection	Pluggable push-wire terminals
Connection, rigid/flexible	0.2…10 mm²/0.2…6 mm²
Connection, flexible with ferrule, without/with plastic sleeve	0.25…6 mm²/0.25…4 mm²
Conductor sizes	AWG 24-8
Stripping length	15 mm
Opening force	90…120 N

Switching elements

Switching elements	3 changeover contacts: K1 (insulation fault alarm 1), K2 (insulation fault alarm 2), K3 (device fault)
Operating mode K1, K2	N/C operation / N/O operation (N/C operation)*
Operating mode K3	N/C operation, not modifiable
Electrical endurance under rated operating conditions	100,000 cycles

Contact data acc. to IEC 60947-5-1:

Utilisation category	AC 13	AC 14	DC-12	DC-12	DC-12
Rated operational voltage	230 V	230 V	24 V	110 V	220 V
Rated operational current	5 A	3 A	1 A	0.2 A	0.1 A
Rated insulation voltage					250 V
Minimum contact rating					1 mA at AC/DC ≥ 10 V

Environment/EMC

EMC	IEC 61326-2-4

Classification of climatic conditions acc. to IEC 60721 (related to temperature and relative humidity)**:**

Stationary use (IEC 60721-3-3)	3K22
Transport (IEC 60721-3-2)	2K11
Long-term storage (IEC 60721-3-1)	1K22

Mechanical conditions acc. to IEC 60721:

Stationary use (IEC 60721-3-3)	3M11
Transport (IEC 60721-3-2)	2M4
Long-term storage (IEC 60721-3-1)	1M12

Deviation from climate classes:

Ambient temperature during operation	-40…+70 °C
Ambient temperature during transport	-40…+80 °C
Ambient temperature during long-term storage	-25…+80 °C
Application range	≤ 3000 m AMSL

Other

Operating mode	Continuous operation
Position of normal use	Vertical, mains coupling at top
Tightening torque for screws (4x M5) to fasten enclosure	1.0…1.5 Nm
Degree of protection, internal components	IP30
Degree of protection, terminals	IP30
Enclosure material	Polycarbonate
Flammability class	V-0
Documentation number	D00369
Weight	≤ 1600 g

( )* = factory setting

Dimension diagram (dimensions in mm)

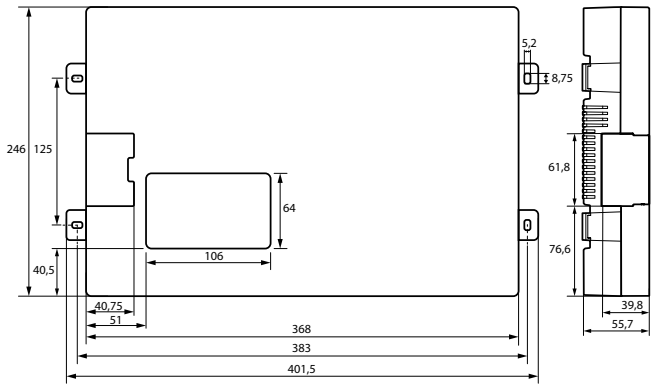

Wiring diagram

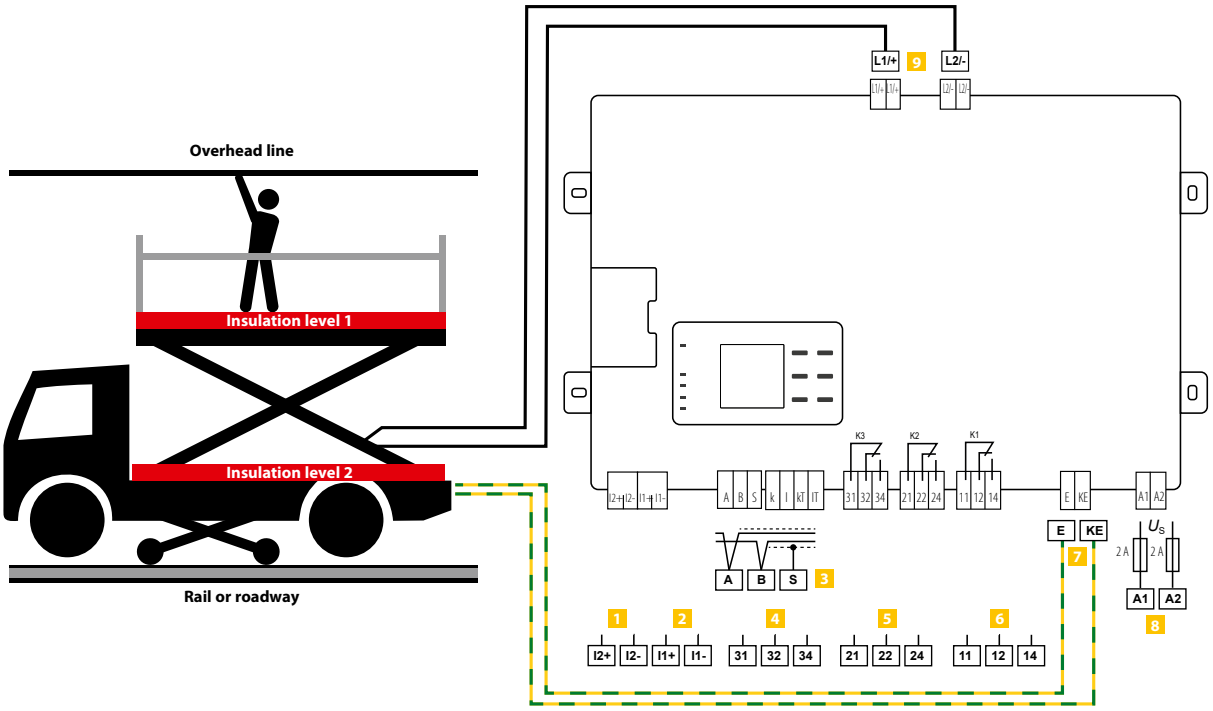

1	**I2+, I2–**	Initial measurement, digital input
2	**I1+, I1–**	Test, digital input
3	**A, B, S**	Connection to RS-485 with BMS bus, Modbus RTU, S = shield (connect to PE on one side), can be terminated with S700
4	**31, 32, 34**	Alarm relay K3 for internal device faults
5	**21, 22, 24**	Alarm relay K2 for insulation faults, alarm 2
6	**11, 12, 14**	Alarm relay K1 for insulation faults, alarm 1
7	**E, KE**	Separate connections of E and KE to PE and/or vehicle chassis
8	**A1, A2**	Connection to U_S = DC 24 V via fuses, 2 A each
9	**L1/+, L2/-**	Connection of both coupling terminals L1/+ and L2/- to lifting arm of the work platform

ISOMETER® IR1575

Insulation monitoring device for unearthed AC, 3(N)AC systems up to 480 V and DC systems up to 480 V

AC/DC

Typical applications

- AC or AC/DC main circuits
- AC/DC main circuits with directly connected DC components
- UPS systems, battery systems
- Heaters with phase control
- Installations including switch mode power supplies

Approvals

Device features

- Insulation monitoring for unearthed AC, AC/DC systems 0…480 V and DC systems 0…480 V
- Two separately adjustable response values 2 kΩ…1 MΩ
- AMP measurement method
- Automatic adaptation to the system leakage capacitance
- Injection of the locating current required for selective insulation fault location (only IR1575PG1)
- Alarm LEDs for Alarm 1/Alarm 2
- Fault memory selectable
- Connection monitoring system conductor/earth
- Test and reset button
- External test/reset button can be connected
- Two separate alarm relays with one potential-free changeover contact each
- N/O or N/C operation, selectable
- Backlit LC display
- Self monitoring with automatic alarm
- Plug-in terminals
- Door mounting enclosure 96 x 96 mm

Standards

The ISOMETER® has been developed in compliance with the following standards:

- DIN EN 61557-8 (VDE 0413-8)
- EN 61557-8
- IEC 61557-8

Further information

For further information refer to our product range on www.bender.de.

Ordering information

Type	Supply voltage U_s[1]	Design	Art. No.
IR1575-435	AC 88…264 V / AC 340…460 V DC 77…286 V	Standard	B91064000
IR1575PG1-435			B91064002
IR1575-434	AC 16…72 V DC 10,2…84 V		B91064003
IR1575PG1-434			B91064004
IR1575W-435	AC 88…264 V / AC 340…460 V DC 77…286 V	Increased shock and vibration resistance	B91064000W
IR1575PG1W-435			B91064002W

[1] Absolute values

Insulation coordination acc. to IEC 60664-1

Rated voltage	AC 500 V
Rated impulse voltage/pollution degree	4 kV/3

Voltage ranges

IR1575-…:	
Nominal system voltage U_n	AC, 3(N)AC 0…480 V, DC 0…480 V
Nominal frequency f_n	DC, 30…420 Hz
IR1575PG1…:	
Nominal system voltage U_n	AC/3 AC 20…480 V
Nominal frequency f_n	30…460 Hz
Nominal system voltage U_n	DC 20…480 V
IR1575x-435:	
Supply voltage U_s at A0/A1 (see nameplate)	AC 88…264 V
Frequency range of U_s	42…460 Hz
Supply voltage U_s at A0/A2 (see nameplate)	AC 340…460 V
Frequency range of U_s	47…63 Hz
Supply voltage U_s at A0/A1 (see nameplate)	DC 77…286 V
IR1575x-434:	
Supply voltage U_s at A0/A1 (see nameplate)	AC 16…72 V
Frequency range of U_s	42…460 Hz
Supply voltage U_s at A0/A1 (see nameplate)	DC 10.2…84 V
IR1575…:	
Power consumption	≤ 5 V

Response values

Response value R_{an1} (Alarm1)	2 kΩ…1 MΩ
Response value R_{an2} (Alarm2)	2 kΩ…1 MΩ
Specified response value (2 kΩ…10 kΩ)	+ 2 kΩ
Specified response value (10 kΩ…1 MΩ)	0 %…+20 %
Response time t_{an} at $R_F = 0.5 \times R_{an}$ and $C_e = 1$ µF	≤ 5 s
Hysteresis (2 kΩ…10 kΩ)	+2 kΩ
Hysteresis (10 kΩ…1 MΩ)	25 %

Measuring circuit for insulation measurement

Measuring voltage U_m	±20 V
Measuring current I_m (bei $R_F = 0$ W)	≤ 170 µA
Internal DC resistance R_i	≥ 119 kΩ
Internal impedance Z_i, at 50 Hz	
IR1575-…	≥ 14 kΩ
IR1575PG1-…	≥ 119 kΩ
Permissible extraneous DC voltage U_{fg}	≤ DC 680 V
Permissible system leakage capacitance C_e	≤ 60 µF

Measuring circuit for insulation fault location (EDS) (only IR1575PG1…)

Test current I_p DC	10/25 mA
Test pulse/break	2 s/4 s

Displays

Display, illuminated	LC display
Characters (number of characters, height)	2 x 16 (4.5 mm)
Display range measuring value	1 kΩ…5 MΩ
Absolute error (1 kΩ…10 kΩ)	±1 kΩ
Relative percentage error (1 kΩ…10 kΩ)	±10 %

Outputs

Test and reset button internal/external	

Switching elements

Switching elements	2 x 1 changeover contact
Operating principle	N/O or N/C operation
Factory setting (Alarm1/Alarm2)	N/O operation
Admissible number of operations/h	12 000 cycles
Contact class	IIB (DIN EN 60255-23)
Rated contact voltage	AC 250 V/DC 300 V
Making capacity	UC 5 A
Breaking capacity	2 A, AC 230 V, cos φ = 0.4 0.2 A, DC 220 V, L/R = 0.04 s
Minimum contact current at DC 24 V	≥ 2 mA (50 mW)

Environment

EMC immunity	acc. to EN 61326
EMC emission	acc. to EN 61326
Shock resistance IEC 60068-2-27 (device in operation)	15 g/11 ms
Bumping IEC 60068-2-29 (transport)	40 g/6 ms
Vibration resistance acc. to IEC 60068-2-6 (device in operation)	1 g/10…150 Hz
Vibration resistance acc. to IEC 60068-2-6 (transport)	2 g/10…150 Hz
Ambient temperature (during operation)	-10…+55 °C
Ambient temperature (during storage)	-40…+70 °C
Classification of climatic conditions acc. to DIN IEC 60721-3-3	3K22

Connection

Connection	plug-in terminals
Connection properties	
rigid/flexible	0.2…4/0.2…2.5 mm²
flexible with ferrule with/without plastic sleeve	0.25…2.5 mm²
Conductor sizes	AWG 24-12
Tightening torque	0.5…0.6 Nm (4.3…5.3 lb-in)

Other

Operating mode	continuous operation
Mounting position	display-oriented
Degree of protection, internal components (DIN EN 60529)	IP30
Degree of protection, terminals (DIN EN 60529)	IP20
Mounting	panel mounting
Flammability class	UL94 V-2
Documentation number	
IR1575	D00116
IR1575PG1	D00357
Weight	≤ 400 g

Option „W“

Shock resistance acc. to IEC 60068-2-27 (during operation)	30 g/11 ms
Bumping acc. to IEC 60068-2-29 (during transport)	40 g/6 ms
Vibration resistance acc. to IEC 60068-2-6	1.6 mm/10…25 Hz 4 g/25…150 Hz
Ambient temperature (during operation)	-10 °C…+55 °C
Storage temperature range	-40 °C…+85 °C

Dimension diagram (dimensions in mm)

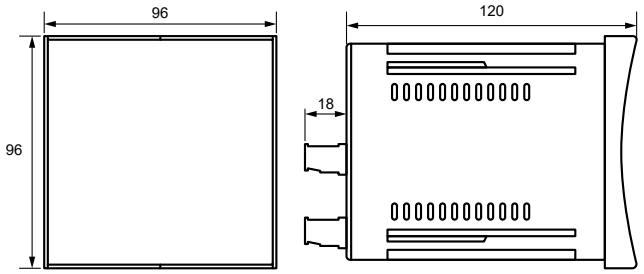

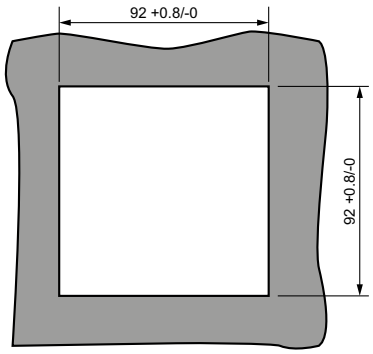

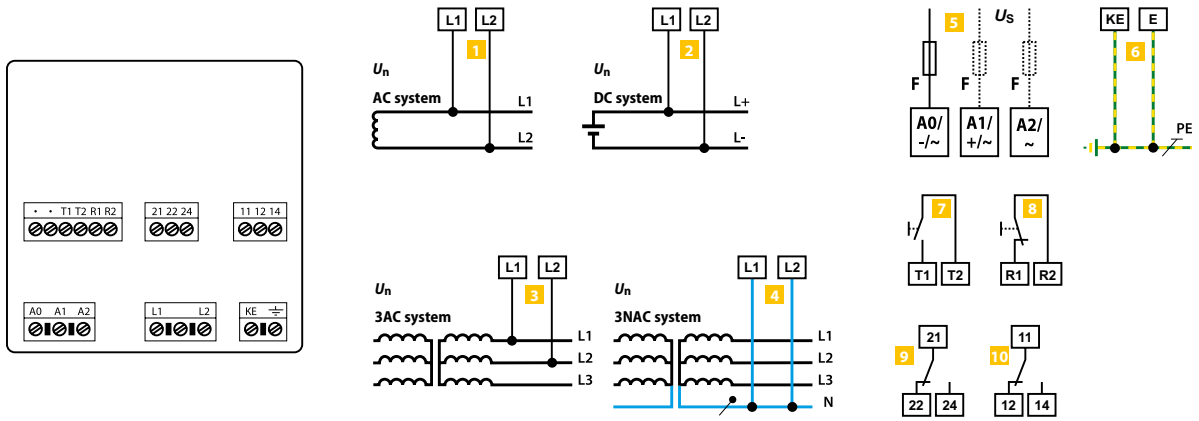

1 Connection to the AC system to be monitored:
connect terminals L1, L2 to conductor L1, L2

2 Connection to the DC system to be monitored:
Connect terminal L1 to conductor L+, terminal L2 to conductor L-

3 Connection to the 3AC system to be monitored:

4 Connect terminals L1, L2 to neutral conductor N or terminals L1, L2 to conductor L1, L2

5 Supply voltage U_S (see nameplate) via 6 A fuse:
A0 - A1 = AC 88…264 V, DC 77…286 V
A0 - A2 = AC 340…460 V

6 Separate connection of E and KE to PE

7 External test button “T1, T2” (N/O contact)

8 External reset button “R1, R2” (N/C contact or wire jumper), when the terminals are open, the fault message will not be stored

9 Alarm relay: Alarm 2

10 Alarm relay: Alarm 1

ISOMETER® IR427 with alarm indicator and test combination MK7

Insulation monitoring device with integrated load and temperature monitoring
for medical IT systems in accordance with IEC 60364-7-710, IEC 61557-8 and DIN VDE 0100-710

AC/DC MED

Typical applications

- Medical IT systems in accordance with IEC 60364-7-710, IEC 61557-8 and DIN VDE 0100-710

Approvals

Device features

ISOMETER® IR427

- Insulation monitoring for medical IT systems
- Load and temperature monitoring for IT system transformers
- Adjustable response value for insulation monitoring
- Adjustable load current response value
- Integrated voltage monitoring for four alarm and test combinations MK7
- Temperature monitoring with PTC thermistor or bimetal switch
- Connection monitoring earth
- LEDs: Power On, Alarm 1, Alarm 2
- Internal/external test button
- Configurable alarm relay: N/O or N/C operation selectable
- Self monitoring with automatic alarm
- Compact two-module enclosure (36 mm)
- Four-wire interface for four alarm indicator and test combinations MK7

Remote alarm indicator and test combination MK7

- Easy-to-clean front foil surface
- Label field
- Panel frame alpine white
- Alarm LEDs: Power On, insulation fault overload, overtemperature
- Test button, mute button
- Standard flush-mounting enclosure 66 mm

Standards

The ISOMETER® has been developed in compliance with the following standards:

- IEC 60364-7-710
- IEC 61557-8
- DIN VDE 0100-710

Further information

For further information refer to our product range on www.bender.de.

Ordering information

Type	Supply voltage U_s	Nominal system voltage U_n[1]	Art. No.	
			screw-type terminals	push-wire terminals
IR427-2	AC 70…264 V, 42…460 Hz	AC 70…264 V, 42…460 Hz	B92075300	B72075300
MK7 Remote alarm indicator and test combination	DC 18…28 V	–	B95100201	–

[1] Absolute values

Accessories

Description	Art. No.
Mounting clip for screw mounting (1 piece per device)	B98060008
MK-cavity-wall-box-60mm	B95100203

Suitable system components

Description	Type	Art. No.
Measuring current transformers	STW2	B942709
Temperature sensor (PTC)	ES0107	B924186
Mounting frame	XM420	B990994

Insulation coordination acc. to IEC 60664-1/IEC 60664-3

Rated insulation voltage	250 V
Rated impulse voltage/pollution degree	4 kV/3
Protective separation (reinforced insulation) between	(L1, L2, E, KE, 1, 2, 3, 4 Z, Z/k, I) -(11, 12, 14)
Voltage test acc. to IEC 61010-1	2.21 kV

Supply voltage

Supply voltage U_s	$= U_n$
Power consumption	≤ 4 VA

IT system being monitored

Nominal system voltage U_n	AC 70…264 V
Nominal frequency f_n	47…63 Hz

Insulation monitoring

Response value R_{an}	50…500 kΩ (50 kΩ)*
Relative uncertainty	±10 %
Hysteresis	25 %
Response time t_{an} at $R_F = 0.5 \times R_{an}$ and $C_e = 0.5$ µF	≤ 5 s
Permissible system leakage capacitance C_e	≤ 5 µF

Measuring circuit

Measuring voltage U_m	±12 V
Measuring current I_m (at $R_F = 0$ Ω)	≤ 50 µA
Internal DC resistance R_i	≥ 240 kΩ
Impedance Z_i at 50 Hz	≥ 200 kΩ
Permissible extraneous DC voltage U_{fg}	≤ DC 300 V

Load current monitoring

Response value, adjustable	5…50 A (7 A)*
Relative uncertainty	±5 %
Hysteresis	4 %

Setting values load current measurement:

Transformer	3150 VA	4000 VA	5000 VA	6300 VA	8000 VA	10000 VA
I_{alarm} 1~	14 A	18 A	22 A	28 A	35 A	45 A

Response time overload, (50 % to 120 %)	< 5 s
Response time for measuring current transformer monitoring	at restart, test or every 1 h

Temperature monitoring:

Response value (fixed value)	4 kΩ
Release value (fixed value)	1.6 kΩ
PTC resistors acc. to DIN 44081	max. 6 in series
Response time overtemperature	< 2 s
Response time connection fault PTC resistors	< 2 s

Displays, memory

LC display	multifunctional, not illuminated
Measured value insulation resistance	10 kΩ…1 MΩ
Operating uncertainty	±10 %, ±2 kΩ
Measured value load current (as % of the set response value)	10…199 %
Operating uncertainty	±5 %, ±0.2 A
Password	on, off/0…999 (off, 0)*

Interface for MK7

Cable length, twisted in pairs, shielded	200 m
Cable (twisted in pairs, one end of shield connected to PE)	recommended: J-Y(St)Y min. 2x0.8

Power supply (terminals 1 and 2):

U_{off}	DC 24 V
I_{max} (max. 4 MK7)	80 mA

Communication (terminal 3 and 4):

Interface/protocol	RS-485/proprietary, no BMS
Terminating resistor	120 (0.25 W), internal, switchable

Cable lengths for the connection of the measuring current transformer STW2 and the temperature sensor

single wire > 0.5 mm²	≤ 1 m
single wire, twisted > 0.5 mm²	≤ 10 m
twisted in pairs, twisted > 0.5 mm²	≤ 40 m
Cable (shield on one side connected to PE)	recommended: J-Y(St)Y min. 2x0.6

Switching elements

Number	1 changeover contact
Operating principle	N/C operation or N/O operation (N/C operation)*
Electrical endurance, number of cycles	10000

Contact data acc. to IEC 60947-5-1

Utilisation category	AC-13	AC-14	DC-12	DC-12	DC-12
Rated operational voltage	230 V	230 V	24 V	110 V	220 V
Rated operational current	5 A	3 A	1 A	0.2 A	0.1 A
Minimum contact rating	1 mA at AC/DC 10 V				

Environment/EMC

EMC	IEC 61326-2-4
Operating temperature	-25…+55 °C

Classification of climatic conditions acc. to IEC 60721 (related to temperature and relative humidity)**:**

Stationary use (IEC 60721-3-3)	3K22
Transport (IEC 69721-3-2)	2K11
Long-term storage (IEC 60721-3-1)	1K22

Classification of mechanical conditions acc. to IEC 60721

Stationary use (IEC 60721-3-3)	3M11
Transport (IEC 60721-3-2)	2M4
Storage (IEC 60721-3-1)	1M12

Connection

Connection type	screw-type terminal or push-wire terminal

Connection	**screw terminals**
Connection properties	
rigid	0.2…4 mm² (AWG 24- 12)
flexible	0.2…2.5 mm² (AWG 24-14)
Two conductors with the same cross section	
rigid/flexible	0.2…1.5 mm² (AWG 24-16)
Stripping length	8 mm
Tightening torque, terminal screws	0.5…0.6 Nm

Connection	**push-wire terminals**
Connection properties	
rigid	0.2…2.5 mm² (AWG 24-14)
flexible	
without ferrules	0.75…2.5 mm² (AWG 19-14)
with ferrules	0.2…1.5 mm² (AWG 24-16)
Stripping length	10 mm
Opening force	50 N
Test opening, diameter	2.1 mm

Other

Operating mode	continuous operation
Position of normal use	any
Degree of protection, internal components (DIN EN 60529)	IP30
Degree of protection, terminals (DIN EN 60529)	IP20
Enclosure material	polycarbonate
Flammability class	UL94V-0
Screw mounting	2 x M4
DIN rail mounting acc. to	IEC 60715
Documentation number	D00118
Weight	≤ 150 g

( )* = Factory setting

Technical data MK7

Insulation coordination acc. to IEC 60664-1/IEC 60664-3	
Rated insulation voltage	50 V
Rated impulse voltage/pollution degree	500 V/3

Supply voltage	
Supply voltage U_S	DC 18…28 V
Power consumption	0.5 VA

Environment/EMC	
EMC	IEC 61326
Operating temperature	-10…+55 °C

Classification of climatic conditions acc. to IEC 60721 (except condensation and formation of ice):	
Stationary use (IEC 60721-3-3)	3K22
Transport (IEC 69721-3-2)	2K11
Long-term storage (IEC 60721-3-1)	1K22

Classification of mechanical conditions acc. to IEC 60721:	
Stationary use (IEC 60721-3-3)	3M11
Transport (IEC 60721-3-2)	2M4
Storage (IEC 60721-3-1)	1M12

Connection	
Connection	screw-type terminals
Connection properties	
rigid/flexible	0.2…2.5 mm² (AWG 24-14)
Flexible with ferrule	0.2…1.5 mm² (AWG 24-16)
Stripping length	8 mm

Other	
Operating mode	continuous operation
Position of normal use	any
Degree of protection, internal components (IEC 60529)	IP30
Degree of protection, terminals (IEC 60529)	IP20
Front plate colour	alpine white
Flush-mounting enclosure, diameter (included in the scope of delivery)	66 mm
Weight (including mounting frame)	≤ 80 g

Dimension diagram (dimensions in mm)

IR427

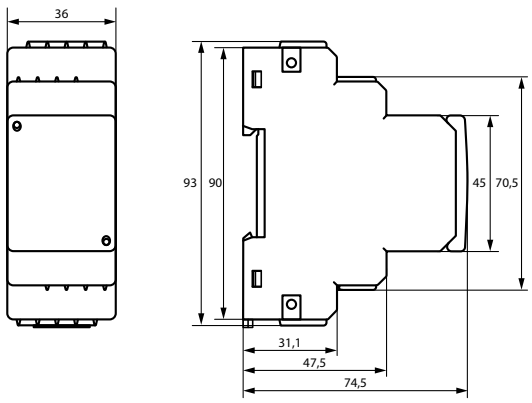

MK7

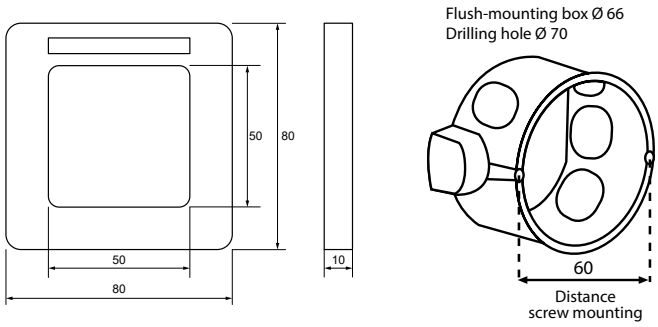

Alarm messages LEDs

	IR427			MK7			
	"ON"	"AL1"	"AL2"	ON	Ins. fault	Overload	Overtemp.
Operation	✓	–	–	✓	–	–	–
System fault[1]	flashing	flashing	flashing	flashing	flashing	flashing	flashing
Insulation fault	✓	✓	–	✓	✓	–	–
Overcurrent	✓	–	✓	✓	–	✓	–
Overtemperature	✓	–	✓	✓	–	–	✓
No communication betw. IR 427+MK7	–	–	–	flashing	–	–	–

[1] Detailed alarm information on LCD

Wiring diagram

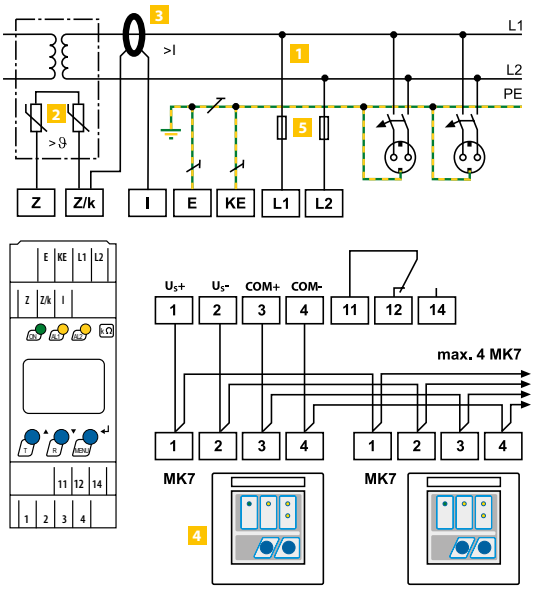

1 Connection to the IT system to be monitored = supply voltage U_S via fuse

2 Temperature sensor

3 Measuring current transformer for load current monitoring

4 Connection alarm indicator and test combination MK7 (max. 4 pieces)

5 Line protection by a fuse in accordance with IEC 60364-4-43 (6 A fuse recommended) In case of supply (L1/L2) from an IT system, both lines have to be protected by a fuse.

Example of application

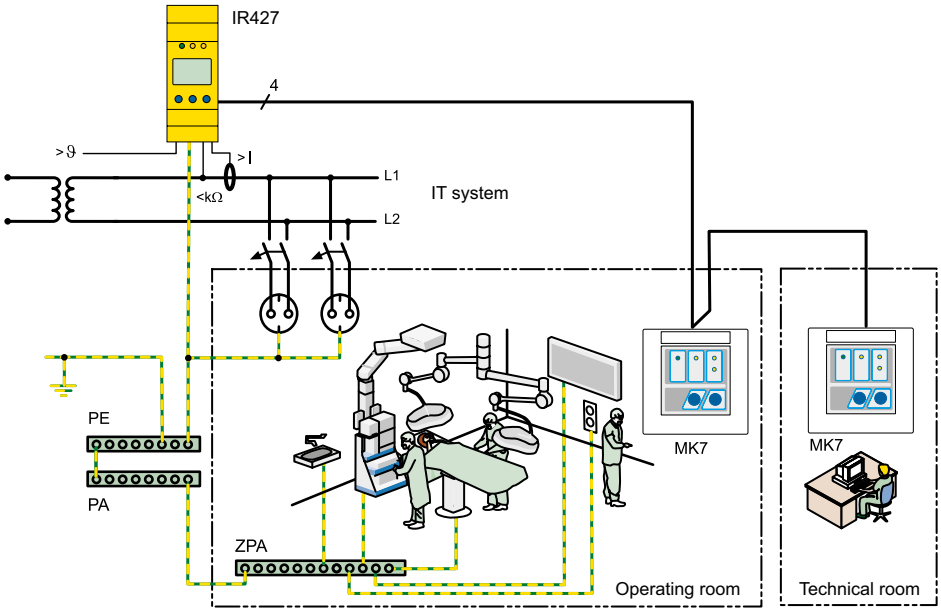

PE = Protective earth
PA = Equipotential bonding
ZPA = Supplementary equipotential bonding

ISOMETER® isoMED427x-(PT)

Insulation monitoring device with integrated load and temperature monitoring and locating current injector and insulation fault location systems for medical IT systems

AC/DC MED

Typical applications

- Medical IT system in accordance with IEC 60364-7-710, IEC 61557-8, IEC 61557-9 and DIN VDE 0100-710

Approvals

The Lloyd's Register certification is only valid for the spring-type terminal version of the isoMED427P-2 (B72075301).

Device features

- Insulation monitoring for medical IT systems
- Adjustable response value for insulation monitoring
- Locating current injector for insulation fault location systems
- Load and temperature monitoring for IT system transformers
- Adjustable load current response value
- Temperature monitoring with PTC thermistor or bimetal switch
- Self monitoring with automatic alarm
- PE connection monitoring
- Internal/external test button
- LEDs: Power On, Alarm 1, Alarm 2
- Configurable alarm relay: N/O or N/C operation selectable
- Compact two-module enclosure (36 mm)
- BMS interface

Standards

The ISOMETER® has been developed in compliance with the following standards:

- DIN EN 61557-8 (VDE 0413-8)
- DIN EN 50155
- EN 45545-2
- IEC 61557-8
- EN61373 cat I class B

Further information

For further information refer to our product range on www.bender.de.

Ordering information

Type	Supply voltage U_s	Art. No.	
		Screw-type terminal	Push-wire terminal
isoMED427-2	AC 70…264 V, 47…63 Hz	B92075306	B72075306
isoMED427P-2 [1]		B92075301	B72075301
isoMED427P-PT		B92075307	B72075307

[1] Only this device has a Lloyds Register approval

Accessories

Description	Art. No.
Mounting clip for screw mounting (1 piece per device)	B98060008

Suitable system components

Description	Type	Art. No.
Measuring current transformers	STW2	B942709
Temperature sensor (PTC)	ES0107	B924186
Mounting frame	XM420	B990994

Insulation coordination acc. to IEC 60664-1/-3

Definitions	
Measuring circuit (IC1)	L1, L2
Control circuit (IC2)	E, KE, Z, Z/k, I, T1, T2, A, B
Output circuit (IC3)	11, 12, 14
Rated voltage	250 V
Overvoltage	category III
Operating altitude	< 2000 m AMSL
Rated impulse voltage	
IC1/(IC2-3)	4 kV
IC2/IC3	4 kV
Rated insulation voltage	
IC1/(IC2-3)	250 V
IC2/IC3	250 V
Pollution degree	3
Protective separation between	
IC1/(IC2-3)	Overvoltage category III, 300 V
IC2/IC3	Overvoltage category III, 300 V
Voltage test (routine test) according to IEC 61010-1	
(IC1-2)/IC3	2.2 kV

Supply voltage	
Supply voltage U_s	100…240 V
Tolerance U_s	-30…+10 %
Power consumption	≤ 3 W

Monitored IT system	
Nominal system voltage U_n	70…264 V
Nominal frequency f_n	47…63 Hz

Insulation monitoring acc. to IEC 61557-8: 2007-01	
Response value R_{an}	50…500 kΩ
Relative uncertainty	±10 %
Hysteresis	25 %
Response time t_{an} at $R_F = 0.5 \times R_{an}$ and $C_e = 0.5$ µF	≤ 5 s
Response time for connection monitoring PE	≤ 1 h
Permissible system leakage capacitance C_e	max. 5 YF

Measuring circuit	
Measuring voltage U_m	±12 V
Measuring current I_m at $R_F = 0$ Ω	≤ 50 µA
Internal DC resistance R_i	≥ 240 kΩ
Impedance Z_i at 50 Hz	≥ 200 kΩ
Permissible extraneous DC voltage U_{fg}	≤ DC 300 V

Load current monitoring	
Response value adjustable	5…50 A
Relative uncertainty	± 5 %
Hysteresis	4 %
Nominal frequency f_n	47…63 Hz

Setting values load current measurement	
Transformer	3150 VA / 4000 VA / 5000 VA / 6300 VA / 8000 VA / 10000 VA
I_{alarm1}	14 A / 18 A / 22 A / 28 A / 35 A / 45 A
Response time, overload (50 % to 120 %)	< 5 s
Response time, CT monitoring	at restart, test or every 1 h

Temperature monitoring

isoMED427x	
Sensor	PTC resistors acc. to DIN 44081 (max. 6 in series)
Response value	4 kΩ
Release value	1.6 kΩ
Relative uncertainty	± 10 %
Response time, overtemperature	< 2 s

isoMED427P-PT	
Sensor	PT100 (no series or parallel connections)
Response value	50…150 °C
Hysteresis	10 %
Relative uncertainty	± 5 %
Response time, overtemperature	< 5 s

Displays, memory	
Display	LC display, multi-functional, not illuminated
Display range measured value insulation resistance (R_F)	10 kΩ…1 MΩ
Operating uncertainty	±10 %, ±2 kΩ
Measured value load current (as % of the set response value)	10 %…199 %
Operating uncertainty	±5 %, ±0.2 A
Password	off, on [0…999]

Interface	
Interface/protocol	RS-485/BMS
Baud rate	9.6 kBit/s
Cable length	≤ 1200 m
Cable: twisted pair, one end of shield connected to PE	recommended J-Y(St)Y min. n x 2 x 0.8
Terminating resistor	120 Ω (0.25 W), internal, switchable
Device address, BMS bus	2…90

Switching elements	
Number	1 changeover contact
Operating principle	N/C operation / N/O operation
Electrical endurance under rated operating conditions	10 000 cycles

Contact data acc. to IEC 60947-5-1	
Utilisation category	AC-13 / AC-14 / DC-12 / DC-12 / DC-12
Rated operational voltage	230 V / 230 V / 24 V / 110 V / 220 V
Rated operational current	5 A / 3 A / 1 A / 0.2 A / 0.1 A
Minimum contact load	10 mA/DC 5 V

Environment/EMC	
EMC	IEC 61326-2-4
Operating temperature	-25…+55 °C

Classification of climatic conditions acc. to IEC 60721	
(related to temperature and relative humidity)	
Stationary use (IEC 60721-3-3)	3K22
Transport (IEC 60721-3-2)	2K11
Long-term storage (IEC 60721-3-1)	1K22

Classification of mechanical conditions acc. to IEC 60721	
Stationary use (IEC 60721-3-3)	3M11
Transport (IEC 60721-3-2)	2M4
Long-term storage (IEC 60721-3-1)	1M12

Connection

Connection type	**Push-wire terminals**
Nominal current	≤ 10 A
Stripping length	10 mm
Opening force	50 N
Test opening, diameter	2.1 mm
Connection properties:	
rigid	0.2…2.5 mm² (AWG 24-14)
flexible without ferrule	0.75…2.5 mm² (AWG 19-14)
flexible with ferrule	0.2…1.5 mm² (AWG 24-16)

Connection type	**Screw-type terminals**
Nominal current	≤ 10 A
Tightening torque	0.5…0.6 Nm (5…7 lb-in)
Cross section	AWG 24-12
Stripping length	8 mm
Connection properties:	
rigid / flexible	0.25…2.5 mm²
Flexible with ferrules with/without plastic sleeve	0.25…2.5 mm²
Multi-conductor rigid/flexible	0.2…1.5 mm²
Multi-conductor flexible with ferrule without plastic sleeve	0.25…1.5 mm²
Multi-conductor flexible with TWIN ferrule with plastic sleeve	0.25…1.5 mm²

Other	
Operating mode	Continuous operation
Position of normal use	Any
Degree of protection, built-in components (DIN EN 60529)	IP30
Degree of protection, built-in components (DIN EN 60529)	IP20
Enclosure material	Polycarbonate
Flammability class	UL94V-0
DIN rail mounting	IEC 60715
Screw mounting	2 x M4
Weight	≤ 150 g

Factory settings isoMED427x-(PT)	
Response value R_{an}	50 kΩ (< R)
Response value I_{alarm}	7 A (> I)
Response value °C	4 kΩ (fixed value for isoMED427x) 120 °C (configurable for isoMED427P-PT)
Operating principle K1	N/C operation (n.c.)
BMS address	3
Automatic insulation fault location	off, deactivated
Password	0, disabled
CT monitoring	on, activated
Termination	off, deactivated (120 Ω)

Dimension diagram (dimensions in mm)

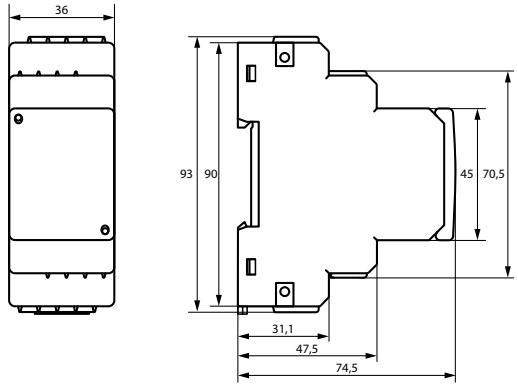

Wiring diagram

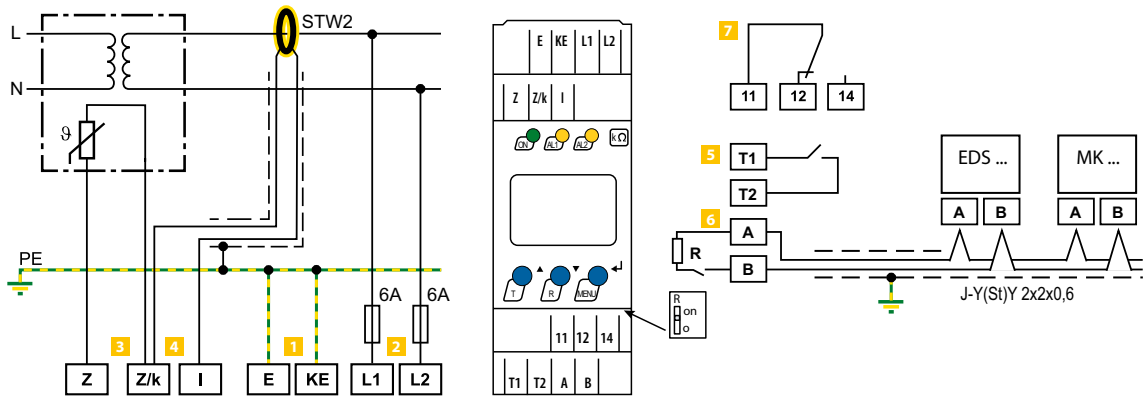

1	**E, KE**	Separate connection of E and KE to PE	4	**Z/k, I**	Connection to measuring current transformer (STW2)
2	**L1, L2**	Connection to the IT system to be monitored; supply voltage (see nameplate) via 6 A fuse	5	**T1, T2**	Connection to external test button
3	**Z, Z/k**	Connection to temperature sensor acc. to DIN44081 (isoMED427x)	6	**A, B**	RS-485 interface, terminate connection to R switch (on/o>), when the device is connected to the bus end.
		Connection to temperature sensor PT100 (isoMED427P-PT)	7	**11, 12, 14**	Alarm relay K1

Example of application

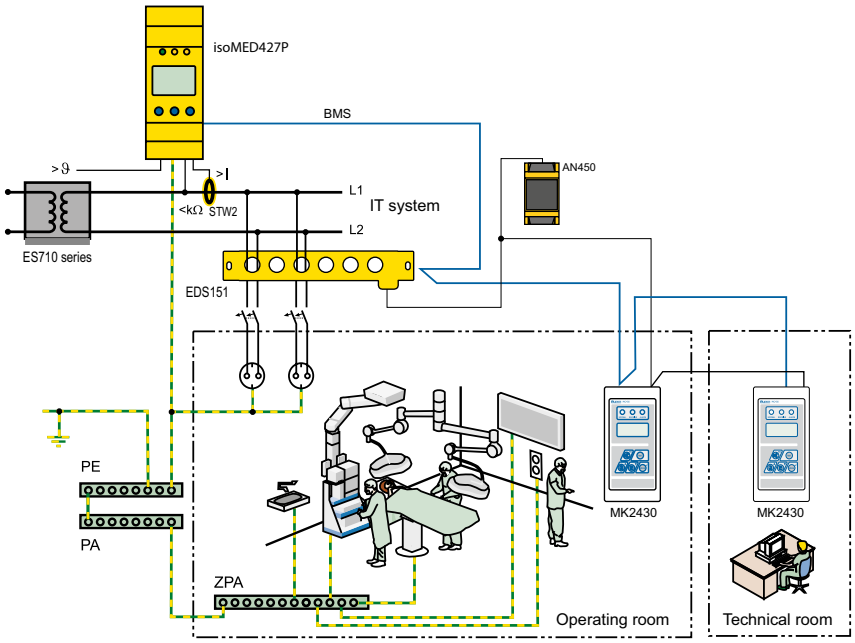

PE = Protective earth
PA = Equipotential bonding
ZPA = Supplementary equipotential bonding

ISOMETER® isoLR275 with coupling device AGH-LR

Insulation monitoring device for unearthed AC, AC/DC and DC systems (IT systems) for installations with a low level of insulation

AC/DC

Typical applications

- AC, DC or AC/DC main circuits
- IT systems with directly connected inverters
- IT systems with high system capacitances of up to 500 µF
- IT systems with high but slow voltage fluctuations
- Installations including switch mode power supplies
- Coupled IT systems

Approvals

Device features

isoLR275

- ISOMETER® for IT AC systems with galvanically connected rectifiers or converters and for IT DC systems (IT = unearthed systems)
- Particularly suitable to monitor installations with a low level of insulation
- Use the isoLR275 only combination with the coupling device AGH-LR
- Automatic adaptation to the existing system leakage capacitance
- ***AMP***^{Plus} measurement method (European patent: EP 0 654 673 B1)
- Choice of measurement methods to meet different requirements
- Two separately adjustable response ranges of 0.2…100 kΩ (Alarm 1, Alarm 2)
- Two-line LC display
- Automatic device self test
- History memory with real-time clock to store alarm messages with date and time stamp
- BMS interface (Bender Measuring Device Interface) for communication with other Bender devices (RS-485 electrically isolated)
- Internal disconnection of the ISOMETER® from the IT system to be monitored (via control signal; terminals F1/F2) (e.g. if several ISOMETERs® are interconnected)
- Current output 0(4)…20mA (electrically isolated) analogously to the measured insulation value

AGH-LR

- Appropriate coupling device for ISOMETER® isoLR275
- Nominal voltage range AC 0…793 V and DC 0…1100 V
- DIN rail mounting

Standards

The ISOMETER® has been developed in compliance with the following standards:

- DIN EN 61557-8 (VDE 0413-8)
- IEC 61557-8
- IEC 61326-2-4
- DIN EN 60664-1 (VDE 0110-1)
- DIN EN 60664-3 (VDE 0110-3)

Further information

For further information refer to our product range on www.bender.de.

Ordering information

Set comprising		Nominal voltage U_n	Supply voltage U_s	Art. No.
Type	Art. No.			
isoLR275-327 AGH-LR-3	B91065700W B98039022W	3(N)AC 0…793 V DC 0…1100 V	AC 19.2…55 V, 42…460 Hz DC 19.2…72 V	B91065702W
isoLR275-335 AGH-LR-3	B91065701W B98039022W	3(N) AC 0…793 V DC 0…1100 V	AC 88…264 V DC 77…286 V	B91065703W

Devices are available as a set.

Accessories

Description	Art. No.
Screw mounting	B990056

Suitable system components

Description	Type	Art. No.	Page
External kΩ measuring instruments	9620-1421	B986841	388

Insulation coordination acc. to IEC 60664-1/IEC 60664-3

Rated insulation voltage for isoLR275-3	AC 250 V
Rated impulse voltage/pollution degree	6 kV/3
Protective separation (reinforced insulation) between (A1/+, A2/-) - (11,12, 14, 21, 22, 24) - (AK1, AK2, KE, PE, T1, T2, R1, R2, F1, F2, M+, M-, A, B)	
Voltage test acc. to IEC 61010-1	3.536 kV
Rated insulation voltage	AC 250 V
Rated impulse voltage/pollution degree	4 kV/3
Basic insulation between:	(11, 12, 14) - (21, 22, 24)
Voltage test acc. to IEC 61010-1	2.21 kV

Voltage ranges

Nominal system voltage U_n	via AGH-LR
isoLR275-335:	
Supply voltage U_s (also see nameplate)	AC 88…264 V**
Frequency range U_s	42…460 Hz
Power consumption	≤ 21.5 VA
Supply voltage U_s (also see nameplate)	DC 77…286 V**
Power consumption	≤ 5.5 W
isoLR275-327:	
Supply voltage U_s (also see nameplate)	AC 19.2…55 V**
Frequency range U_s	42…460 Hz
Supply voltage U_s (also see nameplate)	DC 19.2…72 V**
Power consumption	≤ 6 VA
For UL applications:	
Nominal system voltage U_n	via AGH-LR
isoLR275-335:	
Supply voltage U_s (also see nameplate)	AC 88…250 V
Frequency range U_s	42…460 Hz
Power consumption AC	≤ 21,5 VA
Supply voltage U_s (also see nameplate)	DC 80…250 V
Power consumption DC	≤ 5,5 VA
isoLR275-327:	
Supply voltage U_s (also see nameplate)	DC 24…65 V
Power consumption	≤ 6 VA

Response values

Response value R_{an1}	0.2…100 kΩ
Factory setting R_{an1} (Alarm1)	4 kΩ
Response value R_{an2}	0.2…100 kΩ
Factory setting R_{an2} (Alarm2)	1 kΩ
Relative uncertainty (7…100 kΩ) (acc. to IEC 61557-8)	± 15 %
Relative uncertainty (0.2…7 kΩ)	± 1 kΩ
Response time t_{an}	see table in the manual
Hysteresis	25 %, + 1 kΩ

Measuring circuit

Measuring voltage U_m (peak value)	± 50 V
Measuring current I_m (at $R_F = 0\ \Omega$)	≤ 1.5 mA
Internal DC resistance R_i	≥ 35 kΩ
Impedance Z_i at 50 Hz	≥ 35 kΩ
Permissible extraneous DC voltage U_{fg}	≤ DC 1100 V
Permissible system leakage capacitance C_e	≤ 500 µF (150 µF)*

Displays

Display, illuminated	backlit two-line display
Characters (number/height)	2 x 16/4/mm
Display range measured value	0.2 kΩ…1 MΩ
Operating uncertainty	±15%, ±1 kΩ

Outputs/Inputs

"TEST"-/"RESET" button	internal/external
Cable length "TEST"-/"RESET" button, external	≤ 10 m
Current output (load)	0/4…20 mA (≤ 500 Ω)
Accuracy current output, related to the value indicated (1…100 kΩ)	±15 %, ±1 kΩ

Serial interface

Interface/protocol	RS-485/BMS
Connection	terminals A/B
Cable length	≤ 1200 m
Shielded cable (shield to PE on one end)	2-core, ≥ 0.6 mm², e.g. J-Y(St)Y min. 2 x 0.6
Terminating resistor	120 Ω (0.5 W)
Device address, BMS bus	1…30 (3)*

Switching elements

Switching elements	2 changeover contacts: K1 (Alarm 1), K2 (Alarm 2, device error)
Operating mode K1, K2 (Alarm 1/Alarm 2)	N/C operation/N/O operation (N/O operation)*

Contact data acc. to IEC 60947-5-1:

Utilisation category	AC 13	AC 14	DC-12	DC-12	DC-12
Rated operational voltage	230 V	230 V	24 V	110 V	220 V
Rated operational current	5 A	3 A	1 A	0.2 A	0.1 A
Minimum contact rating	1 mA at AC/DC ≥ 10 V				

Environment/EMC

EMC	
not suitable for household and small companies	IEC 61326-2-4 Ed. 1.0
Operating temperature	-25…+65 °C

Classification of climatic conditions acc. to IEC 60721 (with condensation and formation of ice)**:**

Stationary use (IEC 60721-3-3)	3K23
Transport (IEC 60721-3-2)	2K11
Long-term storage (IEC 60721-3-1)	1K22

Classification of mechanical conditions acc. to IEC 60721:

Stationary use (IEC 60721-3-3)	
for screw mounting with accessories B990056	3M12
for DIN rail mounting	3M11
Transport (IEC 60721-3-2)	2M4
Long term storage (IEC 60721-3-1)	1M12

Connection

Connection	screw-type terminals
Connection properties	
rigid/flexible	0.2…4 mm²/0.2…2.5 mm²
flexible with ferrules without/with plastic sleeve	0.25…2.5 mm²
Tightening torque	0.5 Nm
Conductor sizes	AWG 24-12
Cable length between isoLR275 and AGH-LR	≤ 0.5 m

Other

Operating mode	continuous operation
Mounting	display-oriented
Distance to adjacent devices	≥ 30 mm
Degree of protection, terminals (DIN EN 60529)	IP30
Degree of protection, terminals (DIN EN 60529)	IP20
Type of enclosure	X112, free from halogen
Screw mounting with mounting clip	2 x M4
Flammability class	UL94 V-0
Documentation number	D00127
Weight	≤ 510 g

( )* = factory setting
Data labelled with ** are absolute values

Technical data coupling device AGH-LR

Insulation coordination acc. to IEC 60664-1	
Rated insulation voltage	AC 800 V
Rated impulse voltage/pollution degree	8 kV/3

Voltage ranges	
Nominal system voltage U_n	AC, 3(N)AC 0…793 V, DC 0…1100 V
Nominal frequency f_n	DC, 10…460 Hz
Max. AC voltage U~ in the frequency range f_n = 0.1…10 Hz	$U_{\sim max}$ = 110 V/Hz * f_n

Environment/EMC	
EMC	IEC 61326-2-4 Ed. 1.0
Operating temperature	-25…+65 °C
Classification of climatic conditions acc. to IEC 60721 (with condensation and formation of ice):	
Stationary use (IEC 60721-3-3)	3K23
Transport (IEC 60721-3-2)	2K11
Long-term storage (IEC 60721-3-1)	1K22
Classification of mechanical conditions acc. to IEC 60721:	
Stationary use (IEC 60721-3-3)	3M12
Transport (IEC 60721-3-2)	2M4
Storage (IEC 60721-3-1)	1M12

Connection	
Connection	screw-type terminals
Connection properties	
rigid/flexible	0.2…4 mm²/0.2…2.5 mm²
flexible with ferrules without/with plastic sleeve	0.25…2.5 mm²
Tightening torque	0.5 Nm
Conductor sizes	AWG 24-12
Cable length between isoLR275 and AGH-LR	≤ 0.5 m

Other	
Operating mode	continuous operation
Mounting	cooling slots must be ventilated vertically!
Distance to adjacent devices	≥ 30 mm
Degree of protection, internal components (DIN EN 60529)	IP30
Degree of protection, terminals (DIN EN 60529)	IP20
Type of enclosure	X200, free from halogen
DIN rail mounting	DIN EN 60715/IEC 60715
Screw mounting	2 x M4
Flammability class	UL94 V-0
Weight	≤ 230 g

Dimension diagrams (dimensions in mm)

isoLR275

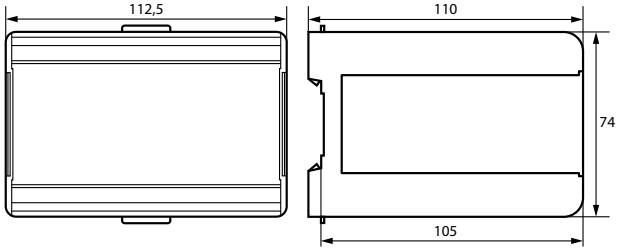

AGH-LR

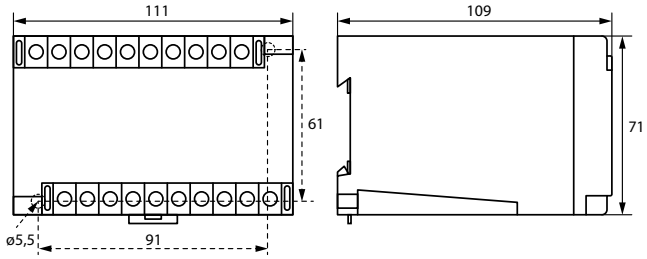

Wiring diagrams

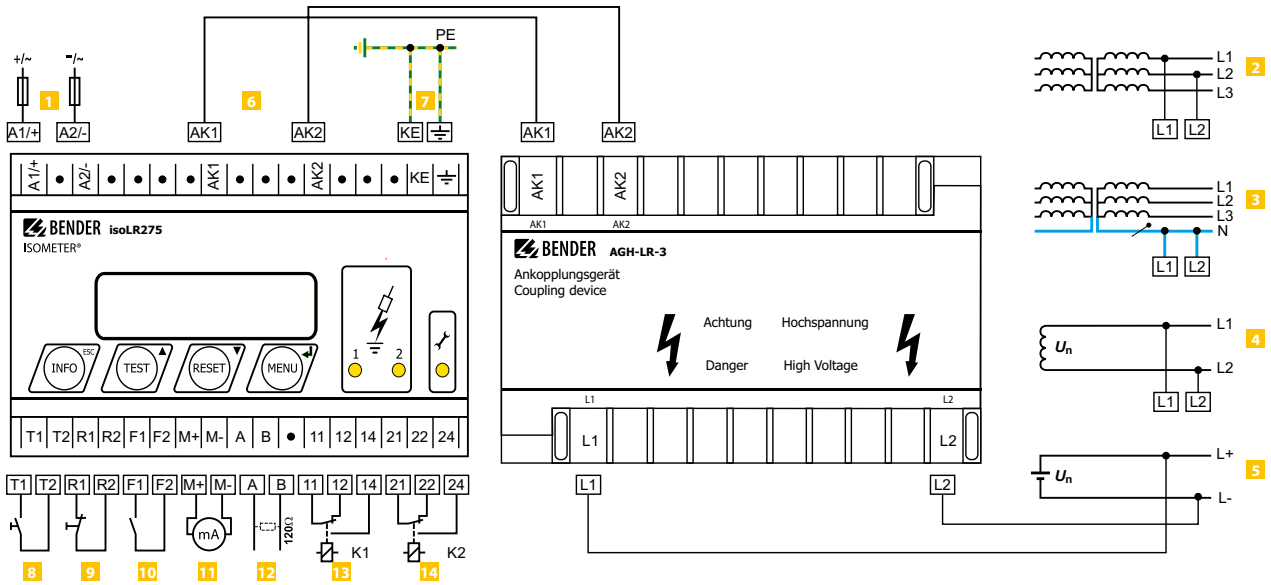

1	Supply voltage U_s (see nameplate) via 6 A fuse; For UL and CSA applications, it is mandatory to use 5 A fuses
2 3	Connection to the 3AC system to be monitored: Connect the terminals L1, L2 to neutral conductor N or terminals L1, L2 to conductor L1, L2.
4	Connection to the AC system to be monitored: connect terminals L1, L2 to conductor L1, L2.
5	Connection to the DC system to be monitored: Connect terminal L1 to conductor L+, terminal L2 to conductor L-
6	Connection to the coupling device AGH-PV
7	Separate connection of ⏚ and KE to PE
8*	External test button (N/O contact)
9*	External reset button (N/C contact or wire jumper), when the terminals are open, the fault message will not be stored
10*	STANDBY by means of the function input F1, F2: when the contact is closed, the insulation resistance is not measured. Disconnection from the IT system
11	Currrent output, electrically isolated: 0…20 mA or 4…20 mA
12	Serial interface RS-485 (termination by means of a 120-Ω resistor)
13	Alarm relay "K1"; available changeover contacts
14	Alarm relay "K2" (device error relay); available changeover contacts
*	**The terminal pairs 7, 8 and 9 have to be wired electrically isolated and do not have to be connected to earth!**

ISOMETER® isoPV with coupling device AGH-PV

Insulation monitoring device for unearthed AC, AC/DC and DC systems (IT systems) for photovoltaic systems up to AC 793 V/DC 1100 V

AC/DC PV

Typical applications

- AC, DC or AC/DC main circuits
- Solar systems with directly connected inverters
- Solar systems with large system capacitances of up to 2000 µF
- Solar systems with high but slow voltage fluctuations
- Installations including switch mode power supplies
- Coupled IT systems

Approvals

Device features

isoPV

- ISOMETER® for IT AC systems with galvanically connected rectifiers or converters and for IT DC systems (IT = unearthed systems)
- Particularly suitable for monitoring photovoltaic systems
- isoPV is always operated in combination with the coupling device AGH-PV
- Automatic adaptation to the existing system leakage capacitance
- ***AMP***^{Plus}-Measurement method (European Patent: EP 0 654 673 B1)
- Choice of measurement methods to meet different requirements
- Two separately adjustable response ranges of 0.2…100 kΩ each (Alarm 1, Alarm 2)
- Two-line LC display
- Automatic device self test
- Memory with real-time clock to store alarm messages with date and time stamp
- BMS interface (Bender Measuring Device Interface) for communication with other Bender devices (RS-485 galvanically isolated)
- Internal disconnection of the ISOMETER® (via control signal; terminals F1/F2) from the IT system to be monitored (e.g. if several ISOMETER®s are interconnected)
- Current output 0(4)…20mA (electrically isolated) in relation to the measured insulation value

AGH-PV

- Coupling device required for ISOMETER® isoPV, each AGH-PV is specially designed for the corresponding isoPV
- Nominal voltage range AC 0…793 V and DC 0…1100 V
- DIN rail mounting

Additional functions

- History memory with real-time clock to store all alarm messages with date and time stamp
- Electrically isolated RS-485 interface (BMS protocol) for communication with other Bender devices
- Isometer disconnecting relays for the operation of several ISOMETER®s in coupled IT systems
- Current output 0(4)…20 mA (electrically isolated)

Standards

The ISOMETER® has been developed in compliance with the following standards:

- DIN EN 61557-8 (VDE 0413-8)
- IEC 61557-8
- IEC 61326-2-4
- DIN EN 60664-1 (VDE 0110-1)
- DIN EN 60664-3 (VDE 0110-3)
- UL 508
- UL 1998 (Software)

Further information

For further information refer to our product range on www.bender.de.

Ordering information

Set comprising		Nominal voltage U_n	Supply voltage U_s	Art. No.
Type	Art. No.			
isoPV-327 AGH-PV	B91065130W B98039020W	3(N) AC 0…793 V DC 0…1100 V	AC 19.2…55 V, 42…460 Hz DC 19,2…72 V	B91065132W
isoPV-335 AGH-PV	B91065131W B98039020W		AC 88…264 V DC 77…286 V	B91065133W

Devices are available as a set.

Accessories

Description	Art. No.
Screw mounting	B990056

Suitable system components

Description	Type	Art. No.	Page
External kΩ measuring instruments	9620-1421	B986841	388

Insulation coordination acc. to IEC 60664-1

Definitions:	
Supply circuit (IC2)	A1, A2
Output circuit (IC3)	11, 14, 24
Control circuit (IC4)	Up, KE, T/R, A, B, AK1, GND, AK2
Rated voltage	240 V
Overvoltage category	III
Rated impulse voltage:	
IC2/(IC3-4)	4 kV
IC 3/(IC4)	4 kV
Rated insulated voltage:	
IC2/(IC3-4)	250 V
IC 3/(IC4)	250 V
Polution degree	3
Protective separation (reinforced insulation) between:	
IC2/(IC3-4)	Overvoltage category III, 300 V
IC 3/(IC4)	Overvoltage category III, 300 V
Voltage test (routine test) according to IEC 61010-1:	
IC2/(IC3-4)	AC 2.2 kV
IC 3/(IC4)	AC 2.2 kV

Voltage ranges

Nominal system voltage U_n	via AGH-PV
isoPV-335:	
Supply voltage U_s (also see nameplate)	AC 88…264 V**
Frequency range U_s	42…460 Hz
Power consumption	≤ 21,5 VA
Supply voltage U_s (also see nameplate)	DC 77…286 V**
Power consumption	≤ 5,5 VA
isoPV-327:	
Supply voltage U_s (also see nameplate)	AC 19,2…55 V**
Frequency range U_s	42…460 Hz
Supply voltage U_s (also see nameplate)	DC 19.2…72 V**
Power consumption	≤ 6 VA
For UL-application	
Nominal system voltage U_n	via AGH-PV
isoPV-335:	
Supply voltage U_s (also see nameplate)	AC 88…250 V
Frequency range U_s	42…460 Hz
Power consumption AC	≤ 21,5 VA
Supply voltage U_s (also see nameplate)	DC 80…250 V
Power consumption DC	≤ 5,5 VA
isoPV-327:	
Supply voltage U_s (also see nameplate)	DC 24…65 V
Power consumption	≤ 6 VA

Response values

Response value R_{an1}	0.2…100 kΩ
Factory setting R_{an1} (Alarm1)	4 kΩ
Response value R^{an2}	0.2…100 kΩ
Factory setting R_{an2} (Alarm2)	1 kΩ
Relative uncertainty (7…100 kΩ) (in accordance with IEC 61557-8:2007-01)	±15 %
Relative uncertainty (0.2…7 kΩ)	±1 kΩ
Response time t_{an}	see table in manual
Hysteresis	25 %, +1 kΩ

Measuring circuit

Measuring voltage U_m (peak value)	± 50 V
Measuring current I_m (at R_F = 0 Ω)	≤ 1.5 mA
Internal DC resistance DC R_i	≥ 35 kΩ
Impedance Z_i at 50 Hz	≥ 35 kΩ
Permissible extraneous DC voltage U_{fg}	≤ DC 1100 V
Max. system leakage capacitance C_e	≤ 2000 µF (2000 µF)*

Displays

Display, illuminated	two-line display
Characters (number/height)	2 x 16/4 mm
Display range measured value	0.2 kΩ…1 MΩ
Operating uncertainty	±15%, ±1 kΩ

Outputs/Inputs

Test/reset button	internal/external
Cable length test/reset button, external	≤ 10 m
Current output (load)	0/4…20 mA (≤ 500 Ω)
Accuracy current output, related to the value indicated (1…100 kΩ)	±15 %, ±1 kΩ

Serial interface

Interface/protocol	RS-485/BMS
Connection	terminals A/B
Cable length	≤ 1200 m
Shielded cable (shield to PE on one end)	2-core, ≥ 0.6 mm2, z. B. J-Y(St)Y 2 x 0.6
Terminating resistor	120 Ω (0.5 Ω)
Device address, BMS bus	1…30 (3)*

Switching elements

Switching elements	2 changeover contacts: K1 (Alarm 1), K2 (Alarm 2, device error)
Operating mode K1, K2	N/C operation n.c./N/O operation n.o. (N/O operation n.o.)*

Contact data acc. to IEC 60947-5-1:

Utilisation category	AC 13	AC 14	DC-12	DC-12	DC-12
Rated operational voltage	230 V	230 V	24 V	110 V	220 V
Rated operational current	5 A	3 A	1 A	0.2 A	0.1 A
Minimum contact rating	1 mA at AC/DC ≥ 10 V				

Environment/EMC

EMC- not suitable for household and small companies	IEC 61326-2-4
Operating temperature	-25…+65 °C

Classification of climatic conditions acc. to IEC 60721 (with condensation and formation of ice)**:**

Stationary use (IEC 60721-3-3)	3K23
Transport (IEC 60721-3-2)	2K11
Long-term storage (IEC 60721-3-1)	1K22

Classification of mechanical conditions acc. to IEC 60721:

Stationary use (IEC 60721-3-3)	
for screw fixing with accessories B990056	3M12
for DIN rail mounting	3M11
Transport (IEC 60721-3-2)	2M4
Long-time storage (IEC 60721-3-1)	1M12

Connection

Connection	screw-type terminals
Connection, rigid/flexible	0.2…4 mm²/0.2…2.5 mm²
Connection flexible with connector sleeve, without/with plastic sleeve	0.25…2.5 mm²
Tightening torque	0.6…0.8 Nm
Conductor sizes	AWG 24-12
Cable length between isoPV and AGH-PV	≤ 0.5 m

Other

Operating mode	continuous operation
Mounting	display oriented
Distance to adjacent devices	≥ 30 mm
Degree of protection, internal components (DIN EN 60529)	IP30
Degree of protection, terminals (DIN EN 60529)	IP20
Type of enclosure	X112, free from halogen
DIN rail mounting	DIN EN 60715/IEC 60715
Screw mounting by means of support (see Seite 67 in manual)	2 x M4
Flammability class	UL94 V-0
Software version	D351 V2.0
Weight	< 510 g

( )* = factory setting

The values marked with** are absolute values

Technical data coupling device AGH-PV

Insulation coordination acc. to IEC 60664-1	
Rated insulation voltage	AC 800 V
Rated impulse voltage/pollution degree	8 kV/3

Voltage ranges	
Nominal system voltage U_n	AC, 3(N)AC 0…793 V, DC 0…1100 V
Nominal frequency f_n	DC, 10…460 Hz
Max. AC voltage U~ in the frequency range f_n = 0.1…10 Hz:	U~ max = 110 V/Hz * f_n

Environment/EMC	
EMC	IEC61326-2-4
Operating temperature	-25…+65 °C
Classification of climatic conditions acc. to IEC 60721 (with condensation and formation of ice)**:**	
Stationary use (IEC 60721-3-3)	3K23
Transport (IEC 60721-3-2)	2K11
Long-term storage (IEC 60721-3-1)	1K22
Classification of mechanical conditions acc. to IEC 60721:	
Stationary use (IEC 60721-3-3)	3M12
Transport (IEC 60721-3-2)	2M4
Long-time storage (IEC 60721-3-1)	1M12

Connection	
Connection	screw-type terminals
Connection, rigid/flexible	0.2…4 mm²/0.2…2.5 mm²
Connection flexible with connector sleeve, without/with plastic sleeve	0.25…2.5 mm²
Tightening torque	0.5 Nm
Conductor sizes	AWG 24-12
Cable length between isoPV and AGH-PV	≤ 0.5 m

Other	
Operating mode	continuous operation
Mounting	cooling slots must be ventilated vertically!
Distance to adjacent devices	≥ 30 mm
Degree of protection, internal components (DIN EN 60529)	IP30
Degree of protection, terminals (DIN EN 60529)	IP20
Type of enclosure	X200, free from halogen
DIN rail mounting	DIN EN 60715/IEC 60715
Screw fixing	2 x M4
Flammability class	UL94 V-0
Weight	< 230 g

( )* = factory setting
The values marked with** are absolute values

Dimension diagrams (dimensions in mm)

isoPV

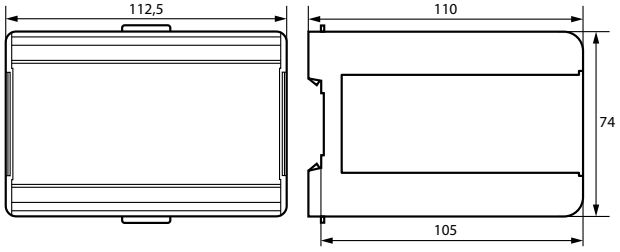

AGH-PV

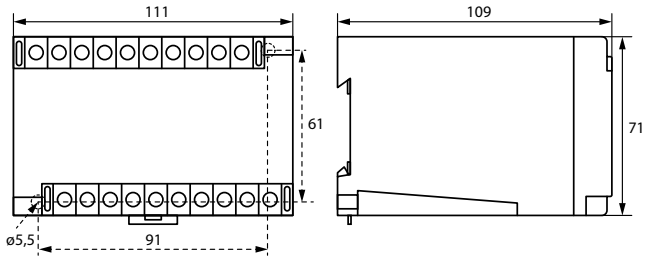

Wiring diagrams

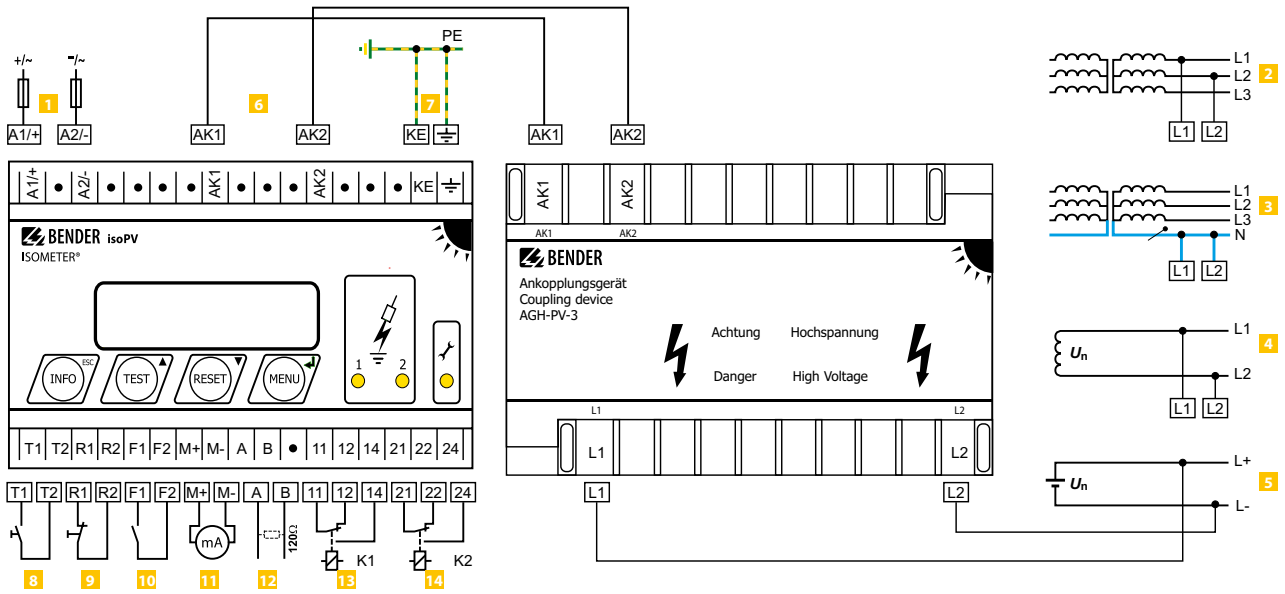

1 Supply voltage U_s (see nameplate) via 6 A fuse;
For UL and CSA applications, it is mandatory to use 5 A fuses

2 3 Connection to the 3 AC system to be monitored:
Connect the terminals L1, L2 to neutral conductor N or terminals L1, L2 to conductor L1, L2.

4 Connection to the AC system to be monitored:
connect terminals L1, L2 to conductor L1, L2.

5 Connection to the DC system to be monitored:
Connect terminal L1 to conductor L+, terminal L2 to conductor L-

6 Connection to the coupling device AGH-PV

7 Separate connection of ⏚ and KE to PE

8 External test button "T1, T2" (N/O contact)

9 External reset button (N/C contact or wire jumper), when the terminals are open, the fault message will not be stored.

10 STANDBY by means of the function input "F1, F2":
when the contact is closed, the insulation resistance is not measured. Disconnection from the IT system

11 Currrent output, electrically isolated: 0…20 mA or 4…20 mA

12 Serial interface RS-485
(termination by means of a 120 Ω resistor)

13 Alarm relay "K1": available changeover contacts

14 Alarm relay "K2" (device error relay); available changeover contacts

Typical application

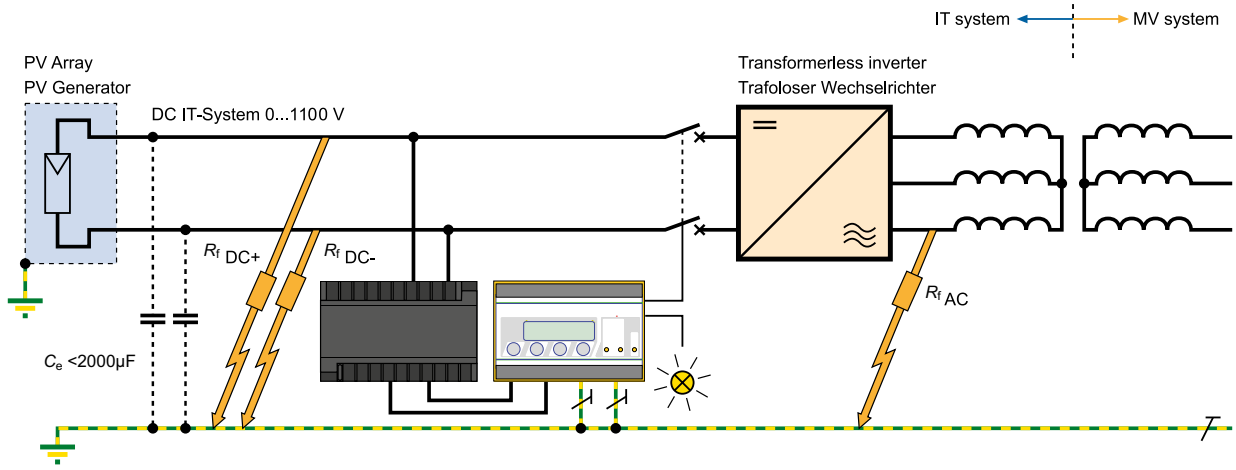

PV generator unearthed (IT system) with nominal voltage ≤ DC 1100 V and ISOMETER® isoPV with coupling device AGH-PV

ISOMETER® isoPV425 with coupling device AGH420

Insulation monitoring device for unearthed DC circuits (IT systems)
for photovoltaic installations up to 3(N)AC, AC 690 V/DC 1000 V

AC/DC PV

Typical applications

- AC, DC or AC/DC main circuits
- Solar systems with directly connected inverters
- Solar systems with high system leakage capacitances
- Solar systems with high but slow voltage fluctuations
- Systems including switched mode power supplies

Approvals

Device features

- Monitoring for unearthed AC and DC systems with galvanically connected rectifiers or inverters
- Measurement of the nominal system voltage (r.m.s.) with undervoltage and overvoltage detection
- Measurement of DC voltages system to earth (L+/PE and L-/PE)
- Automatic adaptation to the system leakage capacitance up to 500 µF
- Automatic device self-test with connection monitoring
- Selectable start-up delay, response delay and delay on release
- Two separately adjustable response value ranges of 1…500 kΩ (Alarm 1, Alarm 2)
- Alarm signalling via LEDs (AL1, AL2), a display and alarm relays (K1, K2)
- N/C operation or N/O operation selectable
- Measured value indication via multi-functional LCD
- Fault memory can be activated
- RS-485 (galvanically isolated) including the following protocols:
  - BMS interface (Bender measuring device interface) for data exchange with other Bender components
  - Modbus RTU
  - isoData (for continuous data output)
- Password protection to prevent unauthorised parameter changes

Standards

The ISOMETER® has been developed in compliance with the following standards:

- DIN EN 61557-8 (VDE 0413-8)
- IEC 61557-8

Further information

For further information refer to our product range on www.bender.de.

Ordering information

Type	Supply voltage U_s	Nominal voltage U_n	System leakage capacitance	Art. No.	
				Screw-type terminal	Push-wire terminal
isoPV425-D4-4 with AGH420	AC 100…240 V, 47…63 Hz / DC 24…240 V	3(N)AC, AC 0…690 V / DC 0…1000 V	≤ 500 µF	B91036303	B71036303

Accessories

Description	Art. No.
Mounting clip for screw mounting (1 piece per device)	B98060008

Insulation coordination acc. to IEC 60664-1/IEC 60664-3

Definitions:	
Supply circuit (IC2)	A1, A2
Output circuit (IC3)	11, 14, 24
Control circuit (IC4)	E, KE, T/R, A, B, AK1, GND, AK2
Rated voltage	240 V
Overvoltage category	III
Rated impulse voltage:	
IC2/(IC3-4)	4 kV
IC 3/(IC4)	4 kV
Rated insulated voltage:	
IC2/(IC3-4)	250 V
IC 3/(IC4)	250 V
Polution degree	3
Protective separation (reinforced insulation) between:	
IC2/(IC3-4)	Overvoltage category III, 300 V
IC 3/(IC4)	Overvoltage category III, 300 V
Voltage test (routine test) according to IEC 61010-1:	
IC2/(IC3-4)	AC 2.2 kV
IC 3/(IC4)	AC 2.2 kV

Supply voltage

Supply voltage U_s	AC 100…240 V/DC 24…240 V
Tolerance of U_s	-30…+15 %
Frequency range U_s	47…63 Hz
Power consumption	≤ 3 W, ≤ 9 VA

IT system being monitored

Nominal system voltage U_n with AGH420	3(N)AC, AC 0…690 V/DC 0…1000 V
Tolerance of U_n	AC +15 %, DC +10 %
Nominal system voltage range U_n with AGH420 (UL508)	AC/DC 0…600 V
Frequency range of U_n	DC, 15…460 Hz

Measuring circuit

Permissible system leakage capacitance C_e at insulation value ≤ 300 kΩ	≤ 1000 µF
Permissible system leakage capacitance C_e at insulation value ≥ 300 kΩ	≤ 500 µF
Permissible extraneous DC voltage U_{fg}	≤ 1150 V

Response values

Response value R_{an1}	2…500 kΩ (10 kΩ)*
Response value R_{an2}	1…490 kΩ (5 kΩ)*
Relative uncertainty R_{an}	± 15 %, at least ±1 kΩ
Hysteresis R_{an}	25 %, at least 1 kΩ
Undervoltage detection	30…1.14 kV (off)*
Overvoltage detection	31…1.15 kV (off)*
Relative uncertainty U	± 5 %, at least ± 5 V
Relative uncertainty depending on the frequency ≥ 200 Hz	-0.03 %/Hz
Hysteresis U	5 %, at least 5 V

Time response

Response time t_{an} at R_F = 0.5 x R_{an} and C_e=1 µF acc. to IEC 61557-8	≤ 10 s
Start-up delay t	0…10 s (0 s)*
Response delay t_{on}	0…99 s (0 s)*
Delay on release t_{off}	0…99 s (0 s)*

Displays, memory

Display	LC display, multi-functional, not illuminated
Display range measured value insulation resistance (R_F)	1 kΩ…1 MΩ
Operating uncertainty at R_F ≤ 1 MΩ	± 15 %, at least ±1 kΩ
Display range measured value nominal system voltage (U_n)	30…1.15 kV r.m.s.
Operating uncertainty	± 5 %, at least ± 5 V
Relative uncertainty depending on the frequency ≥ 200 Hz	-0.03 %/Hz
Display range measured value system leakage capacitance at R_F > 10 kΩ	0…1000 µF
Operating uncertainty	± 15 %, at least ± 2 µF
Password	off/0…999 (0, off)*
Fault memory alarm messages	on/(off)*

Interface

Interface/protocol	RS-485/BMS, Modbus RTU, isoData
Baud rate	BMS (9.6 kBit/s), Modbus RTU (selectable), isoData (115.2 kBits/s)
Cable length (9.6 kBits/s)	≤ 1200 m
Cable: twisted pairs, shield connected to PE on one side	min. J-Y(St)Y 2x0.6
Terminating resistor	120 Ω (0,25 W), internal, can be connected
Device address, BMS bus, Modbus RTU	3…90 (3)*

Switching elements

Switching elements	2 x 1 N/O contacts, common terminal 11
Operating principle	N/C operation/N/O operation (N/O operation)*
Electrical endurance, number of cycles	10000

Contact data acc. to IEC 60947-5-1:

Utilisation category	AC-12	AC-14	DC-12	DC-12	DC-12
Rated operational voltage	230 V	230 V	24 V	110 V	220 V
Rated operational current	5 A	2 A	1 A	0.2 A	0.1 A
Minimum contact rating	1 mA at AC/DC ≥ 10 V				

Environment/EMC

EMC	IEC 61326-2-4

Ambient temperatures:

Operation	-40…+70 °C
Transport	-40…+85 °C
Storage	-40…+70 °C

Classification of climatic conditions acc. to IEC 60721 (related to temperature and relative humidity)**:**

Stationary use (IEC 60721-3-3)	3K22
Transport (IEC 60721-3-2)	2K11
Long-term storage (IEC 60721-3-1)	1K22

Classification of mechanical conditions acc. to IEC 60721

Stationary use (IEC 60721-3-3)	3M11
Transport (IEC 60721-3-2)	2M4
Long-term storage (IEC 60721-3-1)	1M12

Connection

Connection type	screw-type terminal or push-wire terminal

Screw-type terminals:

Nominal current	≤10 A
Tightening torque	0.5…0.6 Nm (5…7 lb-in)
Conductor sizes	AWG 24-12
Stripping length	8 mm
Rigid/flexible	0.2…2.5 mm²
Flexible with ferrules with/without plastic sleeve	0.25…2.5 mm²
Multi-conductor	
rigid /flexible	0.2…1.5 mm²
flexible with ferrules without plastic sleeve	0.25…1.5 mm²
flexible with TWIN ferrules with plastic sleeve	0.5…1.5 mm²

Push-wire terminals:

Nominal current	≤10 A
Conductor sizes	AWG 24-14
Stripping length	10 mm
Rigid	0.2…2.5 mm²
Flexible without ferrules	0.75…2.5 mm²
Flexible with ferrules with/without plastic sleeve	0.25…2.5 mm²
Multi-conductor flexible with TWIN ferrules with plastic sleeve	0.5…1.5 mm²
Opening force	50 N
Test opening, diameter	2.1 mm
Wiring of the terminals Up, AK1, GND, AK2	refer to technical data AGH420 under the heading "Connection"

Other

Operating mode	continuous operation
Mounting	cooling slots must be ventilated vertically
Degree of protection, built-in components (DIN EN 60529)	IP30
Degree of protection, terminals (DIN EN 60529)	IP20
Enclosure material	polycarbonate
DIN rail mounting acc. to	IEC 60715
Screw fixing	2 x M4 with mounting clip
Documentation number	D00028
Weight	≤ 150 g

( )* = Factory setting

Insulation coordination acc. to IEC 60664-1/IEC 60664-3

Definitions:	
Measuring circuit (IC1)	L1/+, L2/-
Control circuit (IC2)	AK1, GND, AK2, Up, E
Rated voltage	1000 V
Overvoltage category	III
Rated impulse voltage:	
IC1/(IC2)	8 kV
Rated insulated voltage:	
IC1/(IC2)	1000 V
Polution degree	3
Protective separation (reinforced insulation) between:	
IC1/(IC2)	Overvoltage category III, 1000 V

Monitored IT system

Nominal system voltage range U_n	AC/DC 0…1000 V
Tolerance of U_n	AC/DC +10 %
Nominal system voltage range U_n (UL508)	AC/DC 0…600 V

Measuring circuit

Measuring voltage U_m	± 45 V
Measuring current I_m at R_F	≤ 400 µA
Internal resistance DC R_i	≥ 120 kΩ

Environment/EMC

EMC	IEC 61326-2-4

Ambient temperatures:

Operation	-40…+70 °C
Transport	-40…+85 °C
Storage	-40…+70 °C

Classification of climatic conditions acc. to IEC 60721 (except condensation and formation of ice)**:**

Stationary use (IEC 60721-3-3)	3K24
Transport (IEC 60721-3-2)	2K11
Long-term storage (IEC 60721-3-1)	1K22

Classification of mechanical conditions acc. to IEC 60721:

Stationary use (IEC 60721-3-3)	3M11
Transport (IEC 60721-3-2)	2M4
Long-term storage (IEC 60721-3-1)	1M12

Connection

Connection type	screw-type terminal or push-wire terminal

Screw-type terminals:

Nominal current	≤10 A
Tightening torque	0.5…0.6 Nm (5…7 lb-in)
Conductor sizes	AWG 24-12
Stripping length	8 mm
Rigid/flexible	0.2…2.5 mm²
Flexible with ferrules with/without plastic sleeve	0.25…2.5 mm²
Multi-conductor rigid	0.2…1.5 mm²
Multi-conductor flexible	0.2…1.5 mm²
Multi-conductor flexible with ferrules without plastic sleeve	0.25…1.5 mm²
Multi-conductor flexible with TWIN ferrules with plastic sleeve	0.25…1.5 mm²

Push-wire terminals:

Nominal current	≤10 A
Conductor sizes	AWG 24-14
Stripping length	10 mm
Rigid	0.2…2.5 mm²
Flexible without ferrules	0.75…2.5 mm²
Flexible with ferrules with/without plastic sleeve	0.25…2.5 mm²
Multi-conductor flexible with TWIN ferrules with plastic sleeve	0.5…1.5 mm²
Opening force	50 N
Test opening, diameter	2.1 mm
Connection type	terminals Up, AK1, GND, AK2

Single cables for terminals Up, AK1, GND, AK2:

Cable lengths	≤ 0.5 m
Connection properties	≥ 0.75 mm²

Other

Operating mode	Continuous operation
Mounting	cooling slots must be ventilated vertically
Distance to adjacent devices from U_n > 800 V	≥ 30 mm
Degree of protection internal components (DIN EN 60529)	IP30
Degree of protection terminals (DIN EN 60529)	IP20
Enclosure material	polycarbonate
DIN rail mounting acc. to	IEC 60715
Screw mounting	2 x M4 with mounting clip
Weight	≤ 150 g

Dimension diagram (dimensions in mm)

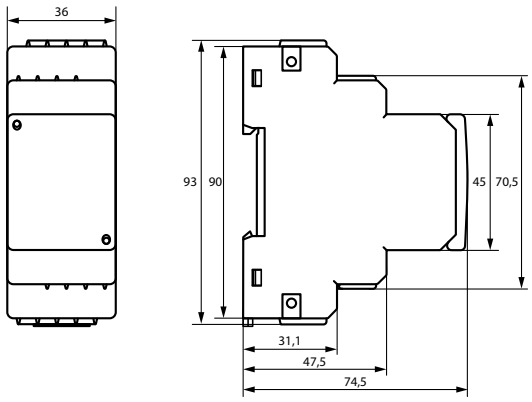

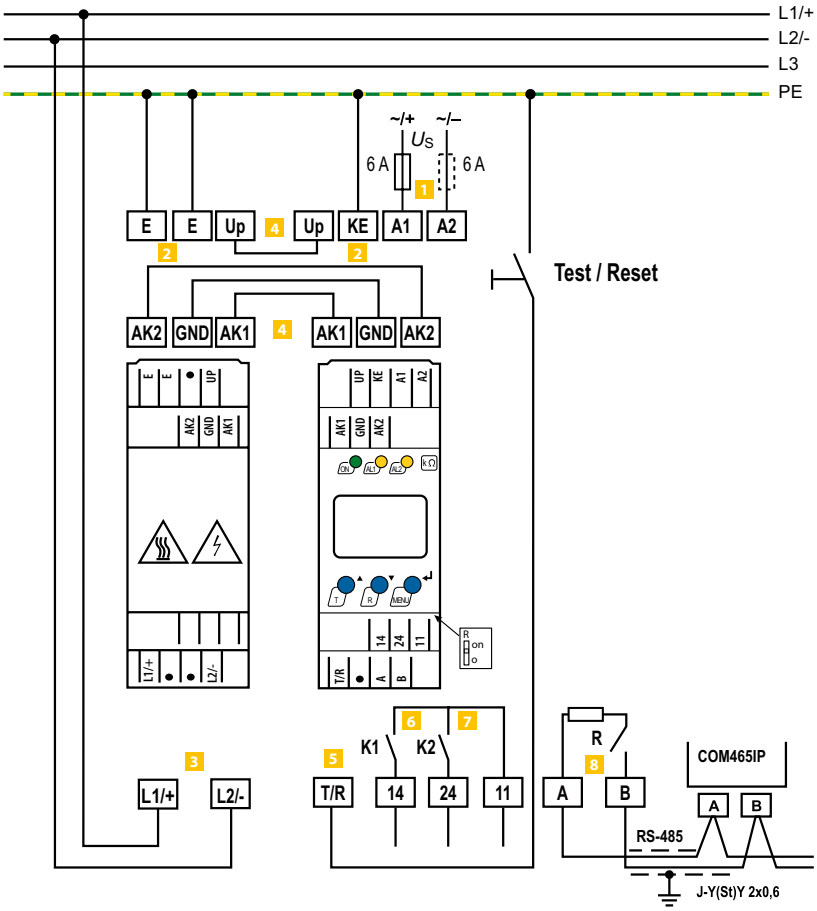

1	**A1, A2**	Connection to the supply voltage via fuse (line protection). If being supplied from an IT system, both lines have to be protected by a fuse.*
2	**E, KE**	Connect each terminal separately to PE: The same wire cross section as for A1, A2 must be used.
3	**L1/+, L2/–**	Connection to the 3(N)AC, AC or DC system to be monitored.
4	**Up, AK1, GND, AK2**	Connect the terminals of the AGH420 to the corresponding terminals of the isoPV425
5	**T/R**	Connection for external combined test and reset button
6	**11, 14**	Connection to alarm relay K1
7	**11, 24**	Connection to alarm relay K2
8	**A, B**	RS-485 communication interface with selectable terminating resistance.

*** For UL applications:**

Only use 60/75°C copper lines!
For UL and CSA applications, it is mandatory to use 5 A fuses for the protection of the supply voltage.

ISOMETER® isoPV1685…

Insulation monitoring device for unearthed photovoltaic systems
up to AC 1000 V and DC 1500 V

DC | AC/DC | PV

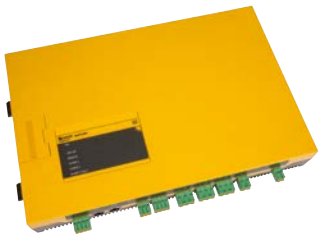

Typical applications

- Large PV systems designed as IT systems up to AC 1000 V/ DC 1500 V

Approvals

only for isoPV1685RTU in DC circuits

Device features

Only device version isoPV1685P provide a locating current injector.

- Insulation monitoring of large-scale photovoltaic systems
- Measurement of low-resistance insulation faults
- Separately adjustable response values R_{an1} (alarm 1) and R_{an2} (alarm 2) (both 200 Ω…1 MΩ) for prewarning and alarm. $R_{an1} \geq R_{an2}$ applies.
- Automatic adjustment to high system leakage capacitances up to 2000 µF, selectable range
- Connection monitoring of L+, L- for reverse polarity (DC only)
- Integrated locating current injector up to 50 mA (isoPV1685P only)
- Device self test with automatic message in the event of a fault
- Alarm relays separately adjustable for insulation fault 1, insulation fault 2
- CAN interface to output measured values, statuses and alarms
- RS-485 interface
  - isoPV1685P: BMS bus, e.g. to control the insulation fault location
  - isoPV1685RTU: BMS bus or Modbus (can be switched using the DIP switch)
- µSD card with data logger and history memory for alarms

Standards

The ISOMETER® has been developed in compliance with the following standards:

- DIN EN 61557-8 (VDE 0413-8)
- IEC 61557-8
- IEC 61557-9
- IEC 61326-2-4
- IEC 60730-1
- DIN EN 60664-1 (VDE 0110-1)
- UL508
- UL1998 (software) isoPV1685RTU in DC cirquits only

Further information

For further information refer to our product range on www.bender.de.

Ordering information

Type	Response value range	Supply voltage U_s[1]	Nominal system voltage U_n	Incl. µSD card	Art. No.
isoPV1685RTU-425	200 Ω…1 MΩ	DC 18…30 V	AC 0…1000 V / DC 0…1500 V	–	B91065603
isoPV1685P-425			DC 0…1500 V	✓	B91065604

[1] Absolutwerte

Insulation coordination acc. to IEC 60664-1/IEC 60664-3

Insulation coordination acc. to IEC 60664-1	
Rated voltage	DC 1500 V
Rated impulse voltage/pollution degree	8 kV/2

Voltage ranges

Nominal system voltage U_n	
isoPV1685RTU	AC 0…1000 V/DC 0…1500 V
isoPV1685P	DC 0…1500 V
Nominal frequency	50/60 HZ ±1 Hz
Tolerance of U_n	AC +10%/DC +6 %
Supply voltage U_s (refer also to device name plate)	DC 18…30 V
Power consumption	≤ 7 W

Measuring circuit for insulation monitoring

Measuring voltage U_m (peak value)	±50 V
Measuring current I_m (at $R_F = 0\ \Omega$)	≤ 1.5 mA
Internal DC resistance R_i	≥ 70 kΩ
Impedance Z_i at 50 Hz	≥ 70 kΩ
Permissible extraneous DC voltage U_{fg}	≤ DC 1500 V
Permissible system leakage capacitance C_e	≤ 2000 µF (500 µF)*

Response values for insulation monitoring

Response value R_{an1} (Alarm 1)	200 Ω…1 MΩ (10 kΩ)*
Response value R_{an2} (Alarm 2)	200 Ω…1 MΩ (1 kΩ)*
Upper limit of the measuring range when set to C_{emax} = 2000 µF	50 kΩ
Relative uncertainty (10 kΩ…1 MΩ) (acc. to IEC 61557-8)	±15 %
Relative uncertainty (0.2 kΩ…< 10 kΩ)	±200Ω ±15 %
Response time t_{an}	see graphic in the manual
Hysteresis	25 %, +1 kΩ

isoPV1685P only:

Measuring circuit for insulation fault location (EDS)

Locating current I_L DC	≤ 50 mA
Test cycle/pause	2/4 s
Number of turns of test winding	10

Displays, memory

LEDs for alarms and operating states	2x green, 4 x yellow
µSD card (Spec. 2.0) for history memory and log files	≤ 32 GByte

Inputs

Digital inputs DigIn1/DigIn2:

High level	10…30 V
Low level	0…0.5 V

Serial interfaces

BMS/Modbus:

Interface/protocol	
isoPV1685RTU:	RS-485/BMS (Slave)/Modbus RTU (Slave); Protocol switchable
isoPV1685P:	RS-485/BMS (Slave)
Connection	terminals A/B Shield: Terminal S
Cable length	≤ 1200 m
Shielded cable (shield to functional earth on one end)	2-core, ≥ 0.6 mm², e.g. J-Y(St)Y 2 x 0.6
Terminating resistor, switchable (RS-485 Term.)	120 Ω (0.5 W)
Device address, BMS bus or Modbus adjustable (DIP switch)	isoPV1685RTU: 2…17
Device address, BMS bus adjustable (DIP switch)	isoPV1685P: 2…33 W

CAN:

Protocol	acc. to SMA/Bender specification V2.5
Frame format	CAN 2.0A 11-bit identifier
Baud rate	500 kBit/s
Connection via 2 x RJ45 acc. to CiA-303-1 connected in parallel	Pin 1: CAN-H Pin 2: CAN-L Pin 3, 7: CAN-GND
CAN identifier	permanently set acc. to the specification above
Cable length	≤ 130 m
Shielded cable	CAT 5 with RJ45 plug
Terminating resistor, can be connected (Term. CAN)	120 Ω (0.5 W)
Potential of the socket housing	functional earth potential

Switching elements

Switching elements	3 changeover contacts K1 (insulation fault alarm 1), K2 (insulation fault alarm 2) K3 (device error)
Operating principle K1, K2	N/C operation or N/O operation (N/C operation)*
Operating principle K3	N/C operation, not changeable

Contact data acc. to IEC 60947-5-1:

Utilisation category	AC 13	AC 14	DC-12	DC-12	DC-12
Rated operational voltage	230 V	230 V	24 V	110 V	220 V
Rated operational current	5 A	3 A	1 A	0.2 A	0.1 A
Minimum contact rating	1 mA at AC/DC ≥ 10 V				

For UL application:

Utilisation category for AC control circuits with 50/60 Hz (Pilot duty)	B300
AC load of the alarm relay outputs	AC 240 V, 1.5 A in case of a power factor of 0.35
AC load of the alarm relay outputs	AC 120 V, 3 A in case of a power factor of 0.35
AC load of the alarm relay outputs	AC 250 V, 8 A in case of a power factor of 0.75 to 0.80
DC load of the alarm relay outputs	DC 30 V, 8 A in case of ohmic load

Connection (except system coupling)

Connection type	pluggable push-wire terminals
Connection	
rigid/flexible	0.2…2.5 mm²/0.2…2.5 mm²
flexible with ferrule, without/with plastic sleeve	0.25…2.5 mm²
Conductor sizes (AWG)	24…12

Connection of the system coupling

Connection type	pluggable push-wire terminals
Connection	
rigid/flexible	0.2…10 mm²/0.2…6 mm²
flexible with ferrule, without/with plastic sleeve	0.25…6 mm²/0.25…4 mm²
Conductor sizes (AWG)	24…8
Stripping length	15 mm
Opening force	90…120 N

Environment/EMC

EMC	IEC 61326-2-4 Ed. 1.0

Classification of climatic conditions acc. to IEC 60721:

Without solar radiation, precipitation, water, icing. Condensation possible temporarily:

Stationary use (IEC 60721-3-3)	3K23
Transport (IEC 60721-3-2)	2K11
Long-term storage (IEC 60721-3-1)	1K22

Classification of mechanical conditions acc. to IEC 60721:

Stationary use (IEC 60721-3-3)	3M11
Transport (IEC 60721-3-2)	2M4
Long-term storage (IEC 60721-3-1)	1M12

Deviation from the classification of climatic conditions:

Ambient temperature during operation	-40 …+70 °C
Ambient temperature for transport	-40 …+80 °C
Ambient temperature for long-term storage	-25 …+80 °C
Relative humidity	10…100 %
Atmospheric pressure	700…1060 hPa (max. height 4000 m)

Other

Operating mode	continuous operation
Position of normal use	vertical, system coupling on top
PCB fixation	lens head screw DIN7985TX
Tightening torque	4.5 Nm
Degree of protection, internal components	IP30
Degree of protection, terminals	IP30
Documentation number	D00007
Weight	≤ 1300 g

( )* = Factory settings

Dimension diagram (dimensions in mm)

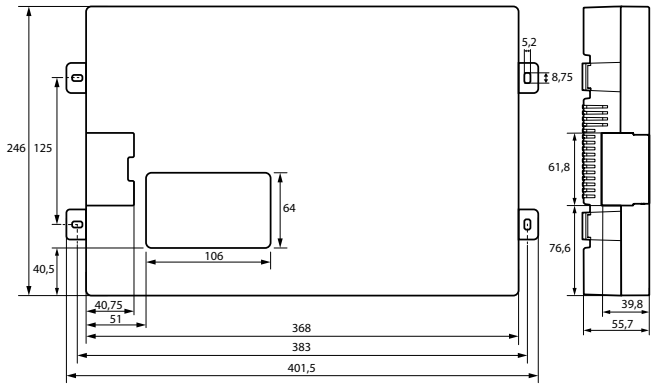

Wiring diagram

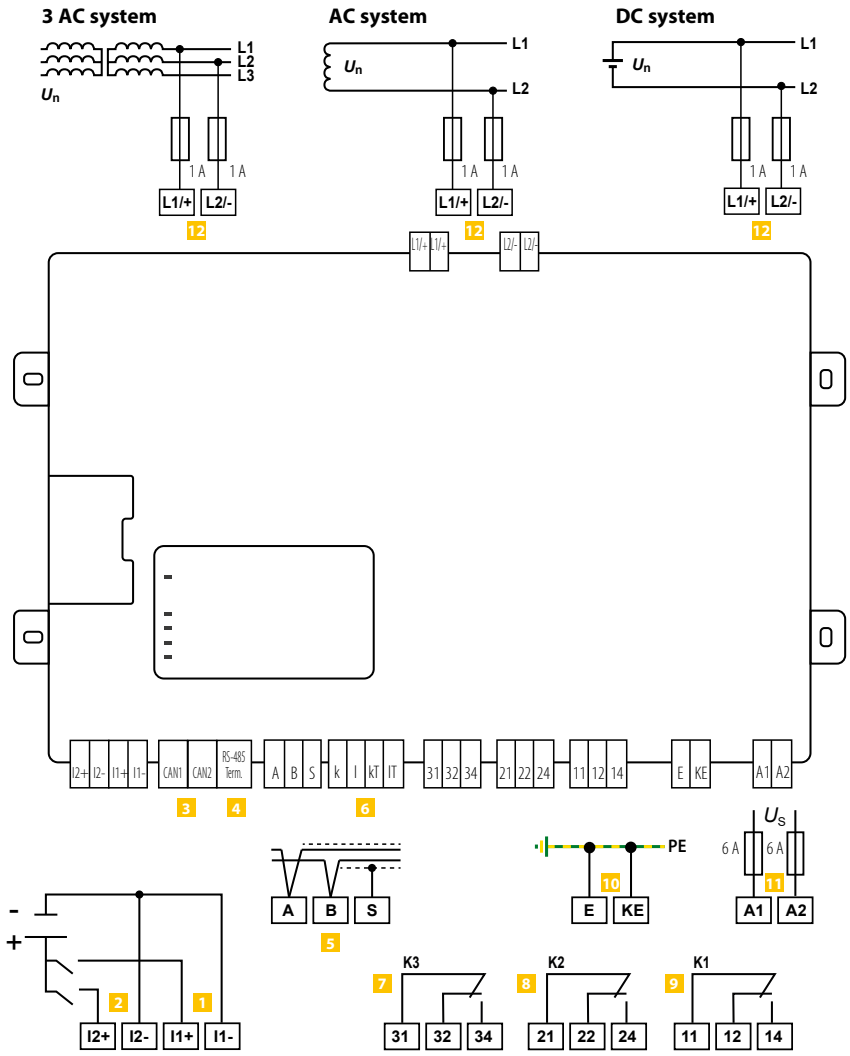

1	**I1+, I1–**	Digital input 1: isoPV1685RTU: Test/Standby isoPV1685P: Starting the insulation fault location in the manual mode	5 **A, B, S** — Connection to Modbus or BMS bus, RS-485, S= shield (connect one end to PE), can be terminated with RS-485 Term. switch.
2	**I2+, I2–**	Digital input 2: isoPV1685RTU: Reset/(Memory) isoPV1685P: No function	6 **k, I/kT, IT** — No function
3	**CAN2, CAN1**	Connection to CAN bus, 2 x RJ-45, can be terminated with CAN 120-Ω termination plug.	7 **31, 32, 34** — Alarm relay K3 for internal device errors
4	**RS-485 Term.**	DIP switch for the termination of the RS-485 interface	8 **21, 22, 24** — Alarm relay K2 for insulation faults.
			9 **11, 12, 14** — Alarm relay K1 for insulation faults.
			10 **E, KE** — Separate connections for E and KE to PE.
			11 **A1, A2** — Connection to U_S = DC 24 V via a 6 A fuse on each line.
			12 **L1/+, L2/-** — Connection to the IT system to be monitored

ISOMETER® isoPV1685DP

Insulation monitoring device for unearthed systems in photovoltaic systems

DC | AC/DC | PV

Typical applications

- Large PV systems designed as IT systems up to AC 1000 V/ DC 1500 V

Approvals

CE UKCA

Device features

- Automatic adjustment to high system leakage capacitances
- Special measuring method ideal for DC systems in combination with 50/60 Hz systems
- Separately adjustable response values Ran1 (alarm 1) and Ran2 (alarm 2) for prewarning and alarm
- High-resolution graphic LC display for excellent readability and recording of the device status
- Connection monitoring
- Automatic device self test with automatic alarm message in the event of a fault
- Graphical representation of the insulation resistance over time (isoGraph)
- History memory with real-time clock (buffer for 13 days) for storing 1023 alarm messages with date and time
- Remote setting of certain parameters via the Internet (COMTRAXX® gateway)
- Remote diagnosis by the Bender service via the Internet
- RS-485 interface for data exchange with other Bender devices
- Measurement of insulation faults 200 Ω…200 kΩ (profile-dependent)
- Integrated locating current injector up to 50 mA for insulation fault location
- Display of insulation faults selectively located by EDS systems
- Parameter setting of EDS systems
- Customer-specific texts for each measuring channel via the menu

Standards

The isoPV1685DP devices were designed according to the following standards:

- DIN EN 61557-8 (VDE 0413-8)
- IEC 61557-8
- IEC 61557-8 Annex C (for Fast 2000 µF profile only)
- DIN EN 61557-9 (VDE 0413-9)
- IEC 61557-9
- IEC 61326-2-4
- DIN EN 60664-1 (VDE 0110-1)

Further information

For further information refer to our product range on www.bender.de.

Ordering information

Type	Response value range	Supply voltage U_s[1]	Nominal voltage U_n	Art. No.
isoPV1685DP	200 Ω…200 kΩ	DC 18…30 V	AC 0…1000 V / DC 0…1500 V	B91065808

[1] Absolute values

Insulation coordination acc. to IEC 60664-1/IEC 60664-3

Definitions:	
Measuring circuit (IC1)	(L1/+, L2/-), (E, KE)
Supply circuit (IC2)	A1, A2
Output circuit 1 (IC3)	11, 12, 14
Output circuit 2 (IC4)	21, 22, 24
Output circuit 3 (IC4)	31, 32, 34
Control circuit (IC6)	(A, B), (I1+, I1-, I2+, I2-)
Rated voltage	1500 V
Overvoltage category	III
Rated impulse voltage:	
IC1 / (IC2-5)	8 kV
IC2 / (IC3-5)	4 kV
IC2 / IC1+IC6	800 V
IC3 / (IC4-6)	4 kV
IC4 / (IC5-6)	4 kV
IC5 / IC6	4 kV
Rated insulation voltage:	
IC1 / (IC2-6)	1500 V
IC2 / (IC3-5)	250 V
IC2 / IC6	50 V
IC3 / (IC4-6)	250 V
IC4 / (IC5-6)	250 V
IC5 / IC6	250 V
Pollution degree	3
Safe isolation (reinforced insulation) between:	
IC1 / (IC2-5)	overvoltage category III, 1500 V
IC2 / (IC3-5)	Overvoltage category III, 300 V
IC2 / IC6	Overvoltage category III, 50 V
IC3 / (IC4-6)	Overvoltage category III, 300 V
IC4 / (IC5-6)	Overvoltage category III, 300 V
IC5 / IC6	Overvoltage category III, 300 V
Voltage test (routine test) acc. to IEC 61010-1:	
IC2 / (IC3-5)	AC 2.2 kV
IC2 / IC6	DC ±0.50 kV
IC3 / (IC4-6)	AC 2.2 kV
IC4 / (IC5-6)	AC 2.2 kV
IC5 / IC6	AC 2.2 kV

Voltage ranges

Nominal system voltage range U_n	AC 0…1000 V; DC 0…1500 V
Tolerance of U_n	AC +10 %/DC +5%
Frequency range of U_n	DC; 50 Hz; 60 Hz
Supply voltage U_s (see also device nameplate)	DC 18…30 V
Frequency range of U_s	DC
Power consumption	≤ 9 W

Measuring circuit for insulation monitoring

Measuring voltage U_m (peak value)	±50 V
Measuring current I_m (at $R_F = 0\ \Omega$)	≤ 0.7 mA
Internal DC resistance R_i	≥ 70 kΩ
Impedance Z_i at 50 Hz	≥ 70 kΩ
IPermissible extraneous DC voltage U_{fg}	≤ DC 1600 V
Permissible system leakage capacitance C_e	profile-dependent, 0…4000 µF

Response values for insulation monitoring

Response value R_{an1} (Alarm 1) and R_{an2} (Alarm 2)	200 Ω…200 kΩ (profile-dependent)
Condition response value	$R_{an1} \geq R_{an2}$
Upper limit of the measuring range for setting for measurement profile „PV up to 500 µF“ $C_{emax} = 500$ µF	200 kΩ
Upper limit of the measuring range for setting for measurement profile „PV up to 4000 µF“ $C_{emax} = 4000$ µF	50 kΩ
Relative uncertainty	
10 kΩ…1 MΩ (acc. to IEC 61557-8)	±15 %
0.2 kΩ…< 10 kΩ	±200 Ω ±15 %
Hysteresis	25 %

Time response

Response time t_{an} at $R_F = 0.5 \times R_{an}$ (R_{an}= 10 kΩ) and C_e= 1 µF acc. to IEC 61557-8	profile-dependent, typ. 10 s

Measuring circuit for insulation fault location (EDS)

Locating current I_L DC	≤ 50 mA (1/2,5/5/10/25/50 mA)
Test cycle/pause	2 s/4 s

Display

Display	Graphic display 127 x 127 pixel, 40 x 40 mm
Display range measured value	200 Ω…200 kΩ

LEDs

ON (operation LED)	green
PGH ON	yellow
SERVICE	yellow
ALARM 1	yellow
ALARM 2	yellow

Digital inputs

Operating mode, adjustable	active high, active low
Functions	off, test, reset, deactivate device, insulation fault location
High level	10…30 V
Low level	0…0.5 V

Serial interface

Interface/protocol	RS-485 / BMS / Modbus RTU
Connection	terminals A/B
Cable length	≤ 1200 m
Shielded cable (shield to functional earth on one end)	2-core, ≥ 0.6 mm2, e.g. J-Y(St)Y 2x0.6
Shield	terminal S
Terminating resistor, can be connected (Term. RS-485)	120 Ω (0.5 W)
Device address, BMS bus	(1) 2…90 (2)*
Device address, Modbus RTU	1…247
Baud rate	9.6 / 19.2 / 38.4 / 57.6 / 115 kB
Parity	even/odd
Stop bits	1 / 2 / auto

Connection (except mains connection)

Connection type	pluggable push-wire terminals
Connection	
rigid/flexible	0.2…2.5 mm²/0.2…2.5 mm²
flexible with ferrule, without/with plastic sleeve	0.25…2.5 mm²
Conductor sizes (AWG)	24…12

Mains connection

Connection type	pluggable push-wire terminals
Connection	
rigid/flexible	0.2…10 mm²/0.2…6 mm²
flexible with ferrule, without/with plastic sleeve	0.25…6 mm²/0.25…4 mm²
Conductor sizes (AWG)	24…8
Stripping length	15 mm
Opening force	90…120 N

Switching elements

Switching elements	3 changeover contacts:
K1	insulation fault alarm 1
K2	insulation fault alarm 2
K3	device error
Operating principle K1, K2	N/C operation or N/O operation
Operating principle K3	N/C operation, cannot be changed
Electrical endurance under rated operating conditions, number of cycles	100,000

Contact data acc. to IEC 60947-5-1:

Utilisation category	AC 13 / AC 14 / DC-12 / DC-12 / DC-12
Rated operational voltage	230 V / 230 V / 24 V / 10 V / 20 V
Rated operational current	5 A / 3 A / 1 A / 0.2 A / 0.1 A
Rated insulation voltage	250 V
Minimum contact rating	1 mA at AC/DC ≥ 10 V

Environment/EMC

EMC	IEC 61326-2-4

Classification of climatic conditions acc. to IEC 60721:

Stationary use (IEC 60721-3-3)	3K22
Transport (IEC 60721-3-2)	2K11
Long-term storage (IEC 60721-3-1)	1K22

Classification of mechanical conditions acc. to IEC 60721:

Stationary use (IEC 60721-3-3)	3M11
Transport (IEC 60721-3-2)	2M4
Long-term storage (IEC 60721-3-1)	1M12

Deviation from the classification of climatic conditions:

Ambient temperature during operation	-40…+70 °C
Ambient temperature transport	-40…+80 °C
Ambient temperature long-term storage	-25 …+80 °C
Area of application	≤ 3000 m AMSL

Other

Operating mode	continuous operation
Position of normal use	vertical, mains connection on top
Tightening torque of the screws (4x M5) for enclosure mounting	1.0…1.5 Nm
Degree of protection, internal components	IP30
Degree of protection, terminals	IP30
Enclosure material	polycarbonate
Flammability class	V-0
Documentation number	D00479
Weight	≤ 1600 g

Dimension diagram (dimensions in mm)

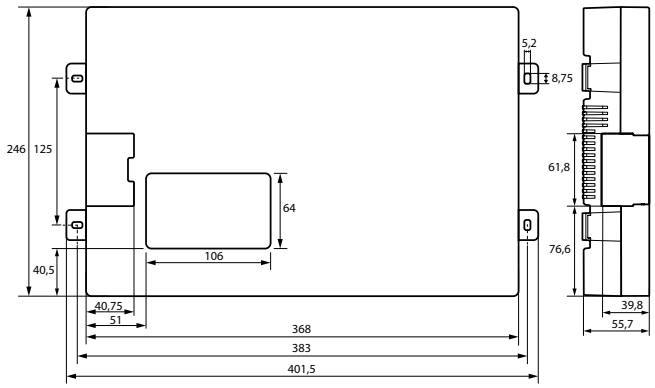

Wiring diagram

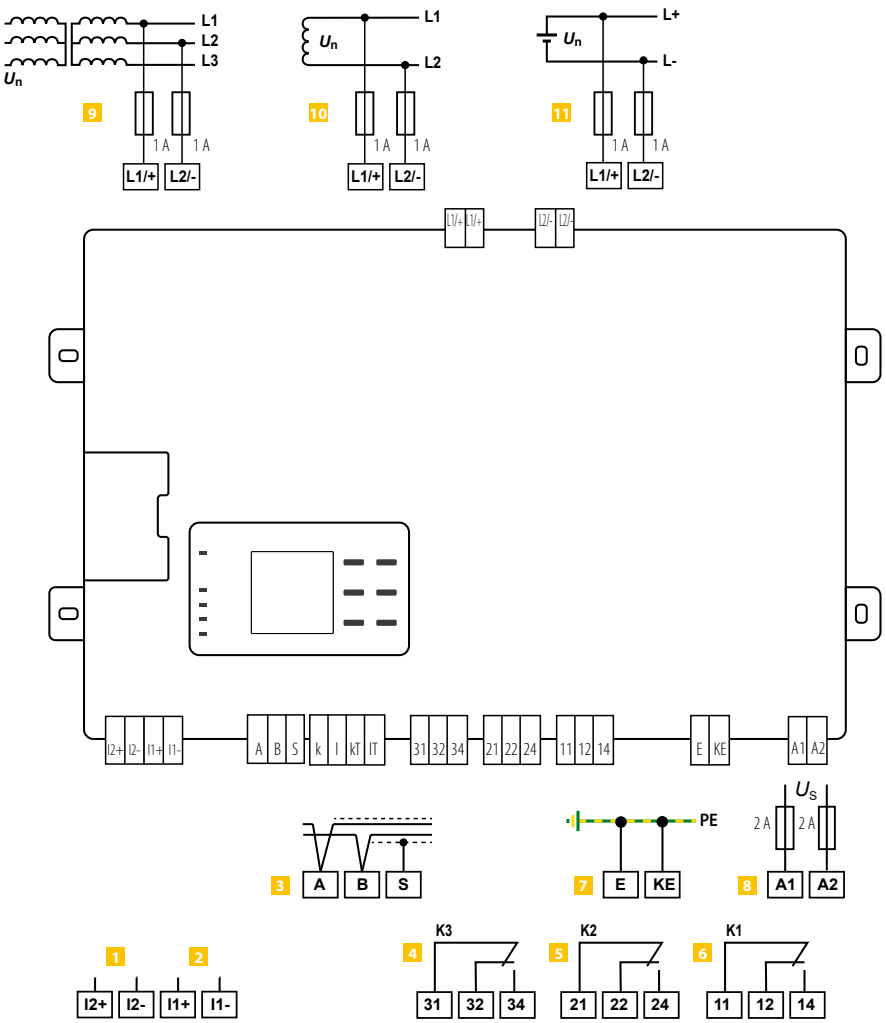

1	**I2+, I2–**	Standby, digital input
2	**I1+, I1–**	Test, digital input
3	**A, B, S**	RS-485 bus connection (A,B) Protocol: BMS S = PE potential Connect one end of shield
4	**31, 32, 34**	Relay output for internal device errors (LED SERVICE)
5	**21, 22, 24**	Alarm relay for insulation faults alarm 2
6	**11, 12, 14**	Alarm relay for insulation faults alarm 1
7	**E, KE**	Separate connections for E and KE to PE
8	**A1, A2**	Connection to supply voltage
9	**L1/+, L2/-**	Connection to a 3AC system via 1 A fuse
10	**L1/+, L2/-**	Connection to a AC system via 1 A fuse
11	**L1/+, L2/-**	Connection to a DC system via 1 A fuse

ISOMETER® IR420-D6

Offline monitor for de-energised AC, DC and 3(N)AC loads in TN,TT and IT systems

AC

Device features

- Insulation monitoring for de-energised TN,TT and unearthed systems AC, 3(N)AC and DC
- Nominal voltage extendable via coupling device
- Two separately adjustable response values 100 kΩ…10 MΩ
- LEDs: Power On LED, LEDs Alarm 1, Alarm 2 for signalling insulation faults
- Combined test/reset button
- Two separate alarm relays with one changeover contact each
- Fault memory behaviour, selectable
- Push-wire terminal (two terminals per connection)

Typical applications

- De-energised loads such as automatic fire extinguisher pumps, emergency drives, ship cranes, slide-valve drives in supply lines (gas, water, oil), motor-driven closing systems, diving pumps, drives for anchors, elevators, flue-gas valves and emergency power generators

Standards

The ISOMETER® has been developed in compliance with the following standards:

- DIN EN 61557-8 (VDE 0413-8)
- EN 61557-8
- IEC 61557-8
- IEC 61326-2-4
- DIN EN 60664-1 (VDE 0110-1)
- DIN EN 60664-3 (VDE 0110-3)

Approvals

Further information

For further information refer to our product range on www.bender.de.

Ordering information

Type	Supply voltage[1] U_s	Art. No.	
		Screw-type terminal	Push-wire terminal
IR420-D6-1	DC 9,6…94 V / AC 16…72 V, 42…460 Hz	B91016415	B71016415
IR420-D6-2	DC 70…300 V / AC 70…300 V, 42…460 Hz	B91016407	B71016407
IR420-D64-2		B91016408	B71016408

[1] Absolute values

Accessories

Description	Art. No.
Mounting clip for screw mounting (1 piece per device)	B 9806 0008

Suitable system components

Description	Nominal voltage U_n[1]	Type	Art. No.	Page
Coupling device	AC 0…1150 V, DC 0…1100 V	AGH150W	B915576	**363**
	AC 0…1650 V AC + DC 0…1300 V	AGH204S-4	B914013	**365**
	AC 50…400 Hz, 0…7200 V	AGH520S	B913033	**366**
	AC 230 V; 50 Hz	AG70	B984718	–
	3 AC 50…400 Hz, 0…500 V	DS2-31	B984092	–

[1] Absolute values

Insulation coordination acc. to IEC 60664-1/IEC 60664-3

Rated insulation voltage	
(A1, A2) - (11, 12, 14) - (21, 22, 24)	300 V
(L1, AK, E, KE, T/R)	500 V
Rated impulse voltage	6 kV
Overvoltage category	II
Pollution degree	3
Protective separation (reinforced insulation) between:	
	(A1, A2) - (L1, AK, E, KE, T/R) - (11, 12, 14) - (21, 22, 24)
Voltage test acc. IEC 61010-1	2.2 kV

Supply voltage

IR420-D6-1:	
Supply voltage U_s	AC 16…72 V/DC 9.6…94 V
Frequency range U_s	42…460 Hz/DC
IR420-D6-2:	
Supply voltage U_s	AC/DC 70…300 V
Frequency range U_s	42…460 Hz, DC
Power consumption	≤ 3 VA

System being monitored

Nominal system voltage U_n	AC 0…400 V
Tolerance of U_n	25 %
Frequency range of U_n	42…460 Hz
without AGH	nominal contact voltage of the N/C. contact K3 (switch-on contactor)
with AGH520S	AC 50…400 Hz, 0…7200 V
with AGH150W	AC 0…1150 V
	DC 0…1100 V
with AGH204S-4	AC 0…1650 V
including DC components	0…1300 V

Response values

Response value R_{an1} (AL 1)	100 k Ω…10 M Ω (1 MΩ)*
Response value R_{an2} (AL 2)	100 k Ω…10 M Ω (100 kΩ)*
Operating error (≤ 1 MΩ)	±15 %
Hysteresis	+25 %

Time response

Response time t_{an} at $R_F = 0{,}5 \times R_{an}$ and $C_e = 1$ µF	≤ 4 s
Start-up delay t	0…10 s (0 s)*
Response delay t_{on}	0…99 s (0 s)*

Measuring circuit

Measuring voltage U_m	+12 V
Measuring current I_m ($R_F = 0$ Ω)	≤ 10 µA
Internal d.c. resistance R_i	≥ 1.2 MΩ
Internal impedance Z_i (50 Hz)	≥ 1.1 MΩ
Admissible extraneous d.c. voltage U_{fg}	≤ DC 300 V
System leakage capacitance C_e	≤ 10 µF

Displays, memory

Display	LC display, multi-functional, non-illuminated
Display range, measuring value	10 kΩ…20 MΩ
Percentage operating error (≤ 1 MΩ)	±15 %
Password	off/0…999 (off)*
Fault memory (alarm relay)	on/off (off)*

Inputs

Cable length external test/reset button	≤ 10 m

Switching elements

Number of	2 (changeover contacts K1, K2)
Operating principle	N/O operation, N/C operation (N/O operation n.o.)*
Electrical endurance	10000 switching operations

Contact data according IEC 60947-5-1

Utilization category	AC-13	AC-14	DC-12	DC-12	DC-12
Rated operational voltage	230 V	230 V	220 V	110 V	24 V
Rated operational current	5 A	3 A	0.1 A	0.2 A	1 A
Minimum current	1 mA at AC/DC ≥ 10 V				

Environment/EMC

EMC	acc. to IEC 61326
Operating temperature	-25…+55 °C
Classification of climatic conditions acc. to IEC 60721 (related to temperature and relative humidity)**:**	
Stationary use (IEC 60721-3-3)	3K22
Transport (IEC 60721-3-2)	2K11
Storage (IEC 60721-3-1)	1K22
Classification of mechanical conditions acc. to IEC 60721:	
Stationary use (IEC 60721-3-3)	3M11
Transport (IEC 60721-3-2)	2M4
Storage (IEC 60721-3-1)	1M12

Connection

Connection	**screw terminals**
Connection properties	
rigid	0.2…4 mm² (AWG 24-12)
flexible	0.2…2.5 mm² (AWG 24-14)
Two conductors with the same cross section	
rigid/flexible	0.2…1.5 mm² (AWG 24-16)
Stripping length	8 mm
Tightening torque, terminal screws	0.5…0.6 Nm

Connection	**push-wire terminals**
Connection properties	
rigid	0.2…2.5 mm² (AWG 24-14)
flexible	
without ferrules	0.75…2.5 mm² (AWG 19-14)
with ferrules	0.2…1.5 mm² (AWG 24-16)
Stripping length	10 mm
Opening force	50 N
Test opening, diameter	2.1 mm

Other details

Operating mode	continuous
Position	any position
Degree of protection internal components (EN 60529)	IP30
Degree of protection terminals (EN 60529)	IP20
Enclosure material	polycarbonat
Flammability class	UL94 V-0
DIN rail mounting acc. to	IEC 60715
Screw mounting	2 x M4 with mounting clip
Documentation number	D00117
Weight	approx. 150 g

( )* = Factory setting

Dimension diagram (dimensions in mm)

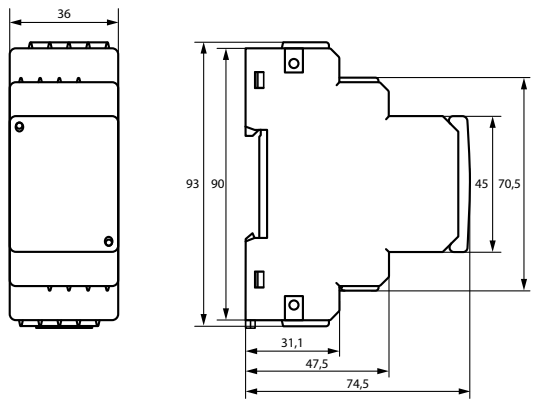

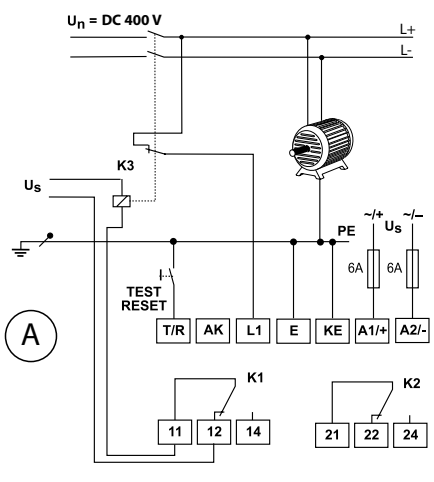

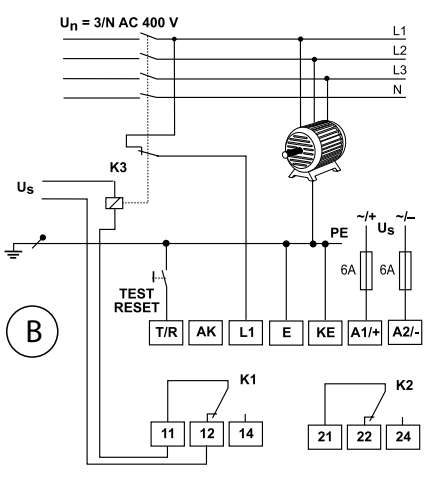

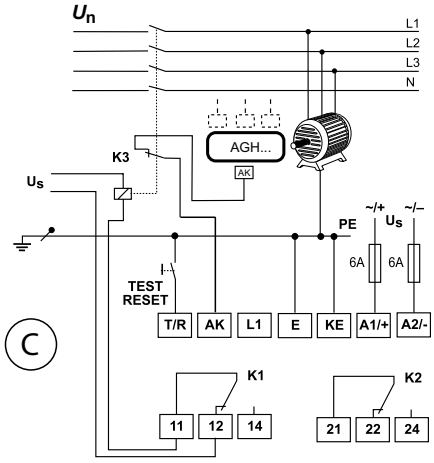

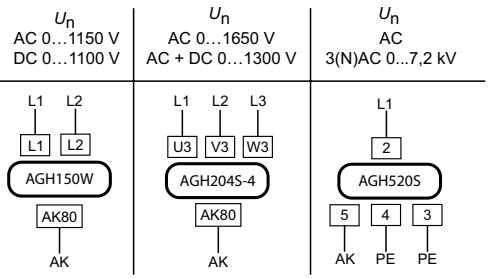

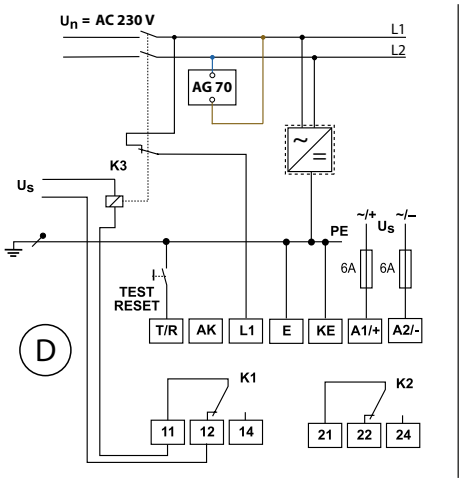

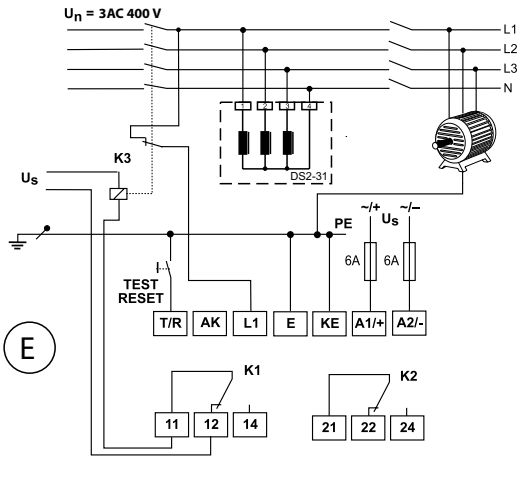

	Description
A	Monitoring of disconnected DC loads up to 400 V with is a low-resistance connection between L + and L- via the load.
B	Monitoring of disconnected 3-phase AC loads up to 400 V with a low-resistance connection between L1, L2 and L3 via the load.
C	Monitoring of disconnected AC loads up to U_n with a low-resistance connection between L1, L2, and L3 via the load.
D	Monitoring of disconnected lines or disconnected loads with high resistance between the active conductors L1 and L2. The inductive load **AG70** connects the lines L1 and L2 via an inductance so that both lines can be monitored.
E	Monitoring of disconnected lines or disconnected loads with high resistance between the active conductors L1, L2 and L3. The inductive star-point coupling device **DS2-31** connects lines L1, L2 and L3 via an inductance so that four lines can be monitored.

Terminal	Connection
E, KE	Connect the leads E and KE separately to PE
A1, A2	Supply voltage U_s (see nameplate) via 6 A fuse
11, 12, 14	Alarm relay K1
21, 22, 23	Alarm relay K2 (system fault relay)
K3	relay for isolating the ISOMETER®
AGH…	Coupling device for the monitoring of loads up to U_n
AG70 **DS2-31**	For the monitoring of loads with an undefined internal resistance or an open single conductor in cables
T/R	for combined external test/reset button
L1, AK	Connection to the system being monitored

ISOMETER® IR423

Insulation monitoring device for mobile generators

AC

Typical applications

- IEC 60364-7-717, DIN VDE 0100-717 (2005) Electrical installations in mobile or transportable units
- DIN VDE 0100-551 (VDE 0100-551), IEC 60364-5-551 Low-voltage generating sets (mobile generators)
- GW 308 "Mobile Stromerzeuger für Rohrleitungsbaustellen 8/00" (Mobile auxiliary power generators on pipeline site") (DVGW)
- BGI 867 (German Berufsgenossenschaft Information) Auswahl und Betrieb von Ersatzstromerzeugern auf Bau-und Montagestellen (Selecting and operating standby generators on construction and installation sites)

Approvals

Device features

- Insulation monitoring for mobile generators AC 0…300 V
- Protection by electrical separation with insulation monitoring and disconnection
- Version "W" for protection against high mechanical stress
- Two separately adjustable response values
- Connection monitoring system/earth
- Power On LED, alarm LEDs: Alarm 1, Alarm 2
- Internal/external test/reset button
- Two separate alarm relays (one changeover contact each)
- N/O or N/C operation, selectable
- Fault memory behaviour, selectable
- Self monitoring with automatic alarm
- Multi-functional LC display
- Adjustable response delay
- Two-module enclosure (36 mm)
- Push-wire terminal (two terminals per connection)

Standards

The ISOMETER® has been developed in compliance with the following standards:

- DIN EN 61557-8 (VDE 0413-8)
- EN 61557-8
- IEC 61557-8
- IEC 61326-2-4
- DIN EN 60664-1 (VDE 0110-1)
- DIN EN 60664-3 (VDE 0110-3)
- ASTM F1669M-96
- ASTM F1207M-96

Further information

For further information refer to our product range on www.bender.de.

Ordering information

Type	Supply voltage [1] U_s	Version	Art. No.	
			Screw-type terminal	Push-wire terminal
IR423-D4-1	AC 16…72 V, 30…460 Hz / DC 9,6…94 V	Standard	B91016304	B71016304
IR423-D4-2	AC/DC 70…300 V, 30…460 Hz		B91016305	B71016305
IR423-D4W-1	AC 16…72 V, 30…460 Hz / DC 9,6…94 V	High mechanical stress	B91016304W	B71016304W
IR423-D4W-2	AC/DC 70…300 V, 30…460 Hz		B91016305W	B71016305W

[1] Absolute values

Accessories

Description	Art. No.
Mounting clip for screw mounting (1 piece per device)	B98060008

Insulation coordination acc. to IEC 60664-1/IEC 60664-3

Rated insulation voltage	250 V
Rated impulse voltage/pollution degree	4 kV/3
Protective separation (reinforced insulation) between	(A1, A2) - (L1, L2, E, KE, T/R) - (11, 12, 14) - (21, 22, 24)
Voltage test acc. to IEC 61010-1	2.21 kV

Supply voltage

Supply voltage U_S	see ordering information
Frequency range U_S	30…460 Hz
Power consumption	≤ 4 VA

IT system being monitored

Nominal system voltage U_n	AC 0…300 V
Nominal frequency f_n	30…460 Hz

Response values

Response value R_{an1} (Alarm 1)	1…200 kΩ (46 kΩ)*
Response value R_{an2} (Alarm 2)	1…200 kΩ (23 kΩ)*
Relative uncertainty 1…5 kΩ/5…200 kΩ	± 0.5 kΩ/± 15 %
Hysteresis 1…5 kΩ/5…200 kΩ	+ 1 kΩ/+ 25 %

Time response

Response time t_{an} at $R_F = 0.5$ x R_{an} and $C_e = 1$ µF	≤ 1 s
Start-up delay (start time) t	0…10 s (0 s)*
Response delay t_{on}	0…99 s (0 s)*

Measuring circuit

Measuring voltage U_m	± 12 V
Measuring current I_m (at $R_F = 0$ Ω)	≤ 200 µA
Internal DC resistance R_i	≥ 62 kΩ
Impedance Z_i at 50 Hz	≥ 60 kΩ
Permissible extraneous DC voltage U_{fg}	≤ DC 300 V
Permissible system leakage capacitance	≤ 5 µF

Displays, memory

Display	LC display, multi-functional, non-illuminated
Display range, measured value	1 kΩ…1 MΩ
Operating uncertainty 1…5 kΩ/5 kΩ…1 MΩ	± 0.5 kΩ/± 15 %
Password	off/0…999 (off)*
Fault memory (alarm relay)	on/off*

Outputs

Cable length test and reset button	≤ 10 m

Switching elements

Number of switching elements	2 x 1 changeover contact
Operating principle	NC or N/O operation (N/O operation)*
Electrical endurance, number of cycles	10000

Contact data acc. to IEC 60947-5-1

Utilisation category	AC-13	AC-14	DC-12	DC-12	DC-12
Rated operational voltage	230 V	230 V	220 V	110 V	24 V
Rated operational current	5 A	3 A	0.1 A	0.2 A	1 A
Contact rating	1 mA at AC/DC ≥ 10 V				

Environment/EMC

EMC	acc. to IEC 61326
Operating temperature	-25…+55 °C

Classification of climatic conditions acc. to IEC 60721 (related to temperature and relative humidity)**:**

Stationary use (IEC 60721-3-3)	3K22
Transport (IEC 60721-3-2)	2K11
Long-time storage (IEC 60721-3-1)	1K22

Classification of mechanical conditions IEC 60721:

Stationary use (IEC 60721-3-3)	3M11
Transport (IEC 60721-3-2)	2M4
Long-time storage (IEC 60721-3-1)	1M12

Connection

Connection type	screw-type terminal or push-wire terminal
Connection	**screw terminals**
Connection properties	
rigid	0.2…4 mm² (AWG 24-12)
flexible	0.2…2.5 mm² (AWG 24-14)
Two conductors with the same cross section	
rigid/flexible	0.2…1.5 mm² (AWG 24-16)
Stripping length	8…9 mm
Tightening torque, terminal screws	0.5…0.6 Nm
Connection	**push-wire terminals**
Connection properties	
rigid	0.2…2.5 mm² (AWG 24-14)
flexible	
without ferrules	0.75…2.5 mm² (AWG 19-14)
with ferrules	0.2…1.5 mm² (AWG 24-16)
Stripping length	10 mm
Opening force	50 N
Test opening, diameter	2.1 mm

Other

Operating mode	continuous operation
Mounting	any position
Degree of protection, internal components (DIN EN 60529)	IP30
Degree of protection, terminals (DIN EN 60529)	IP20
Enclosure material	polycarbonate
Flammability class	UL94 V-0
DIN rail mounting acc. to	IEC 60715
Screw mounting	2 x M4 with mounting clip
Documentation number	D00038
Weight	≤ 150 g

Option "W"

Ambient temperature	-40…+70 °C

Climatic categories acc. to IEC 60721 (with condensation and formation of ice)**:**

Stationary use (IEC 60721-3-3)	3K23

Classification of mechanical conditions acc. to IEC 60721:

Stationary use (IEC 60721-3-3)	3M12
Vibration resistance	acc. to IEC 60068-2-6
For DIN rail mounting	3 g/30…150 Hz
For screw mounting	6 g/30…150 Hz

( )* = factory setting

Dimension diagram (dimensions in mm)

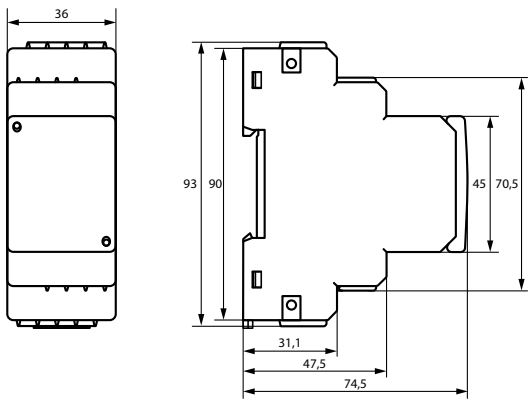

Wiring diagram

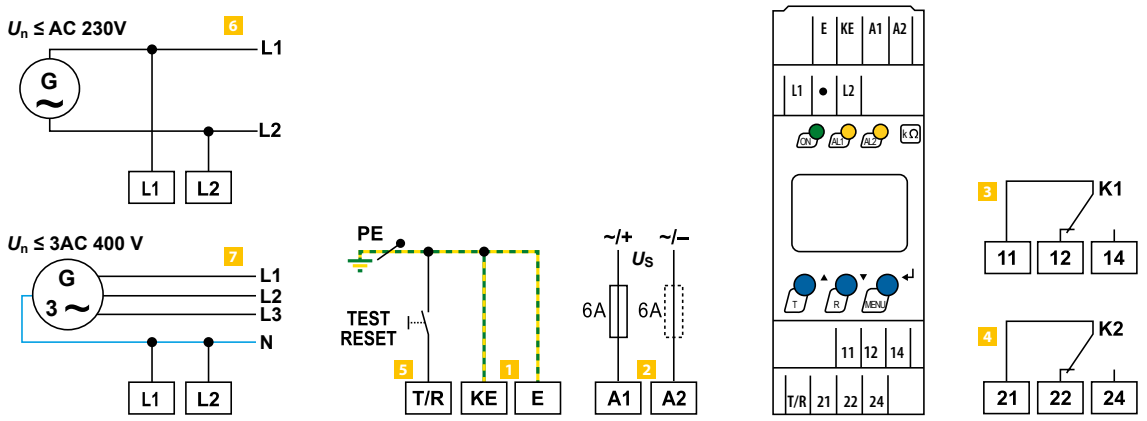

1	**E,KE**	Connect the leads E and KE separately to PE.	5	**T/R**	für kombinierte, externe Test/Reset-Taste
2	**A1, A2**	Supply voltage U_s (see nameplate) via 6 A fuse	6	**L1, L2**	U_n ≤ AC 230 V: Terminals L1/L2 to L1/L2 of the generator
3	**11, 12, 14**	Alarm relay K1			U_n ≤ 3AC 400 V: Terminals L1/L2 to N of the generator
4	**21, 22, 24**	Alarm relay K2 (system fault relay)			

Protective measure for mobile generators: "Protection by electrical separation with insulation monitoring and disconnection"

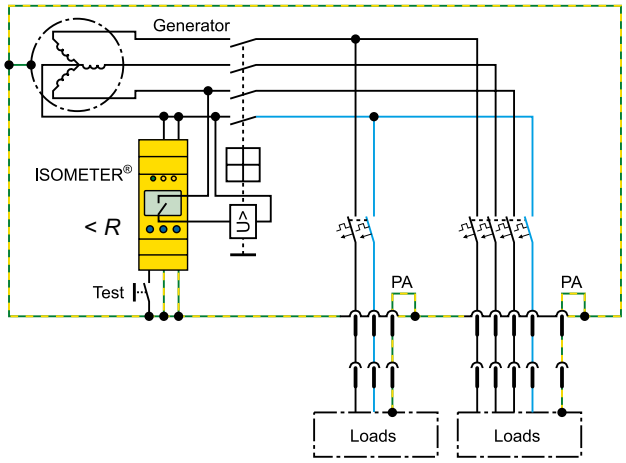

Setting K1/K2 for **overvoltage release**:
N/O operation (n.o.); fault memory setting: OFF

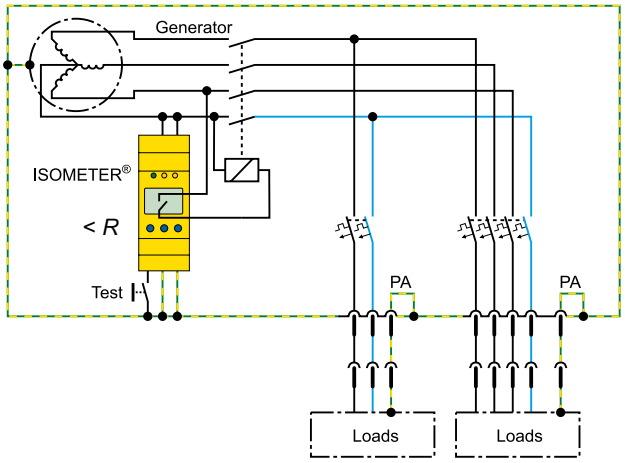

Setting K1/K2 for **contactor**:
N/C operation (n.c.), fault memory setting: ON

ISOMETER® IR123P

Insulation monitoring device for mobile generators

AC

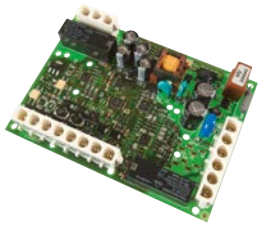

Typical applications

- Monitoring of unearthed AC systems (IT systems) in mobile generators

Approvals

Device features

- Insulation monitoring for unearthed DC systems (IT systems) 100…300 V
- Automatic adaptation to the existing system leakage capacitance
- Optimised measurement technique for low-frequency control processes
- Electrically isolated PWM output for the kΩ measuring value
- Optocoupler output for signalling the device status
- Automatic device self test
- Certonal coating
- Permanently set response value for the insulation resistance 23/46 kΩ
- Second response range 40/80 kΩ selectable via a jumper

Further information

For further information refer to our product range on www.bender.de.

Ordering information

Type	Connection	Nominal system voltage U_n	Supply voltage U_s[1]	Art. No.
IR123P-4-2	Connectors	AC 100…300 V, 22…460 Hz	$U_s = U_n$	B91016308

[1] Absolute values

Technical data

Insulation coordination acc. to IEC 60664-1

Rated insulation voltage	250 V
Rated impulse voltage/pollution degree	2.5 kV/3
Protective separation (reinforced insulation) between:	
(A1/L1, A2/L2, E, KE, T/R, T, R, M+, M-/OK-, OK+) -(11-12-14) -(21-22-24)	
Voltage test acc. to IEC 61010-1	2.21 kV

Supply voltage

Supply voltage U_s	$= U_n$
Power consumption	≤ 3 VA

IT system being monitored

Nominal system voltage U_n	AC 100…300 V
Nominal frequency f_n	22…460 Hz

Response values

Response value R_{an2} (Alarm 2)	(46 kΩ)*
Response value R_{an1} (Alarm 1)	(23 kΩ)*
Second response range, adjustable via jumper JP1	80/40 kΩ
Relative percentage error	±15 %
Hysteresis	+25 %

Time response

Response time t_{an} at $R_F = 0.5 \times R_{an}$ and $C_e = 1$ µF	≤ 1 s

Measuring circuit

Measuring voltage U_m	±12 V
Measuring current I_m (at $R_F = 0$ Ω	≤ 200 µA
Internal DC resistance R_i	≥ 62 kΩ
Impedance Z_i at 50 Hz	≥ 60 kΩ
Permissible extraneous DC voltage U_{fg}	≤ DC 300 V
Permissible system leakage capacitance C_e	≤ 5 µF

Memory

Fault memory (alarm relay)	on / off (on)*

Inputs

Reset button	N/O contact
Test button	N/O contact
Cable length external test/reset button	3 m

Switching elements

Number of switching elements	2 (changeover contacts K1, K2)
Operating principle K1/K2	N/C or N/O operation (N/O operation)*
Electrical endurance, number of cycles	10,000

Interfaces

Optocoupler, alarm	U_{CE} 24 V, I_C 10 mA
Optocoupler, measured value	$U_{CE} \leq$ DC 24 V, $I_C \leq$ 10 mA
	PWM signal, duty cycle 0 % = ∞ kΩ
	PWM signal, duty cycle 50 % = 120 kΩ
	PWM signal, duty cycle 100 % = 0 kΩ

Contact data acc. to IEC 60947-5-1:

Utilisation category	AC-13	AC-14	DC-12	DC-12	DC-12
Rated operational voltage	230 V	230 V	220 V	110 V	24 V
Rated operational current	5 A	3 A	0.1 A	0.2 A	1 A
Minimum current	1 mA at AC/DC ≥ 10 V				

Environment/EMC

EMC	acc. to IEC 61326-2-4
Operating temperature	-25…+60 °C

Climatic categories acc. to IEC 60721, valid for one encapsulated p.c.b.:
(related to temperature and relative humidity)

Stationary use (IEC 60721-3-3)	3K22
Transport (IEC 60721-3-2)	2K11
Storage (IEC 60721-3-1)	1K22

Classification of mechanical conditions acc. to IEC 60721, valid for one encapsulated p.c.b:

Stationary use (IEC 60721-3-3)	3M12
Transport (IEC 60721-3-2)	2M4
Storage (IEC 60721-3-1)	1M12

Connection

Connection	connectors Universal MATE-N-LOK
	3-pole TE Connectivity Nr. 350789-1
	6-pole TE Connectivity Nr. 641831-1
	8-pole TE Connectivity Nr. 641828-1

Other

Operating mode	continuous operation
Mounting	any position
Dimensions of the p.c.b., L x W x H	
without connectors	107.5 x 76.5 x 20 mm,
with connectors	107.5 x 76.5 x 35 mm
Enclosure	without
Documentation number	D00113
Weight	≤ 150 g

( )* = factory setting

Dimension diagrams (dimensions in mm)

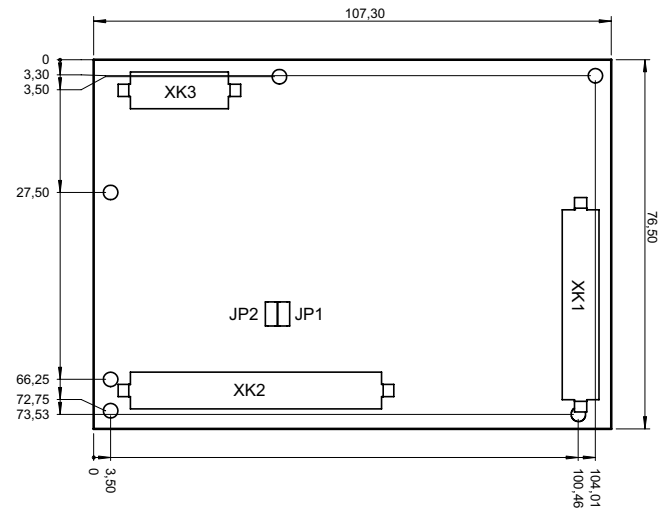

Wiring diagrams

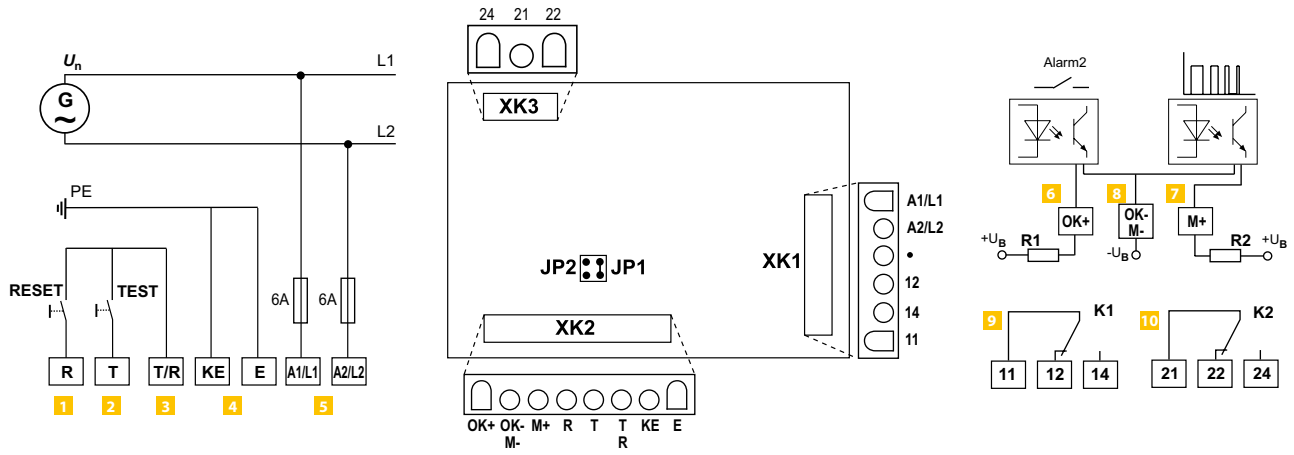

1	**R**	Input for reset button "R" (N/O contact)
2	**T**	Input for test button "T" (N/O contact)
3	**T/R**	Common input for test and reset button "T/R"
4	**E, KE**	Connect the leads E and KE separately to PE
5	**A1/L1, A2/L2**	Supply voltage $U_s = U_n$ Connection to the IT system to be monitored
6	**OK+**	Digital output optocoupler "OK+": Alarm 2; Connect to external operating voltage U_B: max. +24 V
7	**M+**	Pulse-width-modulated output optocoupler "M+": Measuring value; Connect to external operating voltage U_B: max. +24 V
8	**OK-, M-**	Common reference point U_B "OK-, M-" for OK+and M+
9	**11, 12, 14**	Alarm relay "K1"
10	**21, 22, 24**	Alarm relay "K2"

Application example with overvoltage release or contactor

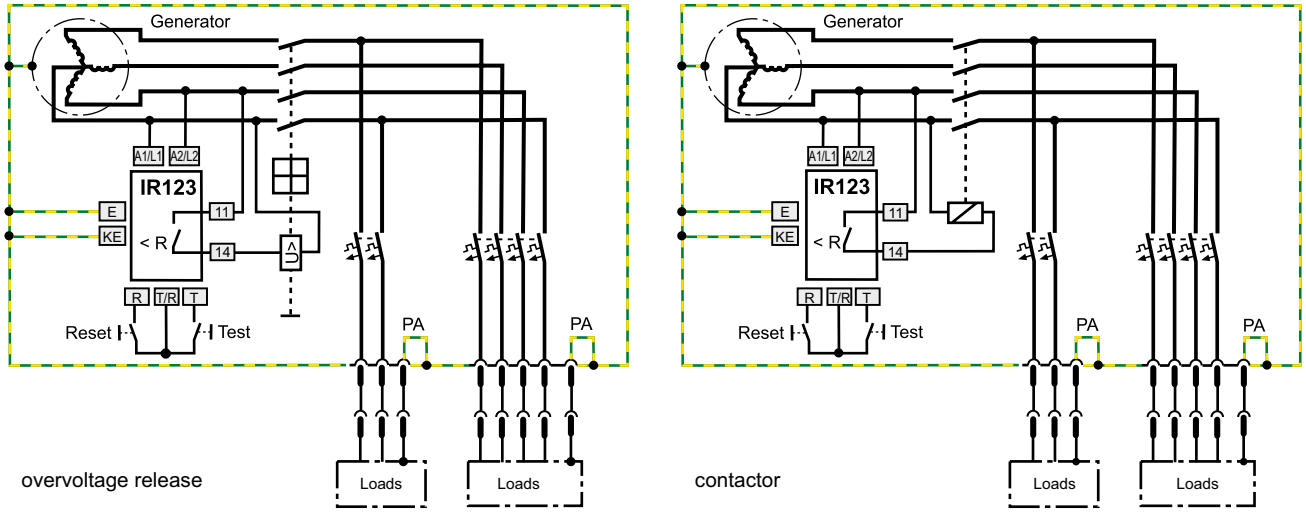

Setting K1/K2 for **overvoltage release**: N/O operation

Setting K1/K2 for **contactor**: N/C operation

ISOMETER® isoGEN423

Insulation monitoring device for unearthed AC, AC/DC and DC systems (IT systems) up to 3(N)AC, AC 400 V, DC 400 V, suitable for the application of generators acc. to standard DIN VDE 0100-551

AC/DC

Typical applications

- AC main circuits up to 400 V
- DC main circuits up to 400 V
- Generators according to DIN VDE 0100-551

Approvals

Device features

- Monitoring the insulation resistance for unearthed AC/DC systems
- Measurement of the system voltage (true r.m.s.) with undervoltage and overvoltage detection
- Measurement of DC system voltages to earth (L1+/PE and L2-/PE)
- Two operating modes: GEn and DC
- Automatic adaptation to the system leakage capacitance up to 5 µF
- Selectable start-up delay, response delay and delay on release
- Two separately adjustable response value ranges of 5…200 kΩ (Alarm 1, Alarm 2)
- Alarm signalling via LEDs (AL1, AL2), a display and alarm relays (K1, K2)
- Automatic device self test with connection monitoring
- Selectable N/C or N/O relay operation
- Measured value indication via multifunctional LCD
- Fault memory can be activated
- RS-485 (galvanically isolated) including the following protocols:
  - BMS interface (Bender measuring device interface) for data exchange with other Bender components
  - Modbus RTU
  - IsoData (for continuous data output)
- Password protection to prevent unauthorised parameter changes

Standards

The ISOMETER® has been developed in compliance with the following standards:

- DIN EN 61557-8 (VDE 0413-8)
- IEC 61557-8

Further information

For further information refer to our product range on www.bender.de.

Ordering information

Type	Nominal voltage U_n	Supply voltage U_s	Art. No.	
			Screw-type terminal	Push-wire terminal
isoGEN423-D4-4	3(N)AC, AC 0…400 V DC 0…400 V	AC 100…240 V DC 24…240 V	B91036325	B71036325
isoGEN423-D4W-4			–	B71036325W

Accessories

Description	Art. No.
Mounting clip for screw mounting (1 piece per device)	B98060008

Insulation coordination acc. to IEC 60664-1/IEC 60664-3

Definitions:	
Measuring circuit (IC1)	L1/+, L2/-
Supply circuit (IC2)	A1, A2
Output circuit (IC3)	11, 14, 24
Control circuit (IC4)	E, KE, T/R, A, B
Rated voltage	400 V
Overvoltage category	III
Rated impulse voltage:	
IC1/(IC2-4)	6 kV
IC2/(IC3-4)	4 kV
IC3/IC4	4 kV
Rated insulation voltage:	
IC1/(IC2-4)	400 V
IC2/(IC3-4)	250 V
IC3/IC4	250 V
Polution degree	3
Protective separation (reinforced insulation) between:	
IC1/(IC2-4)	Overvoltage category III, 600 V
IC2/(IC3-4)	Overvoltage category III, 300 V
IC 3/IC4	Overvoltage category III, 300 V
Voltage test (routine test) according to IEC 61010-1:	
IC2/(IC3-4)	AC 2,2 kV
IC 3/IC4	AC 2,2 kV

Supply voltage

Supply voltage U_s	AC 100…240 V/DC 24…240 V
Tolerance of U_s	-30…+15 %
Frequency range U_s	47…63 Hz
Power consumption	≤ 3 W, ≤ 9 VA

IT system being monitored

Nominal system voltage U_n	3(N)AC, AC 0…400 V/DC 0…400 V
Tolerance of U_n	+25 %
Frequency range of U_n	DC, 35…460 Hz

Measuring circuit

Measuring voltage U_m	±12 V
Measuring current I_m at R_F, $Z_F = 0$	≤ 110 µA
Internal resistance R_i, Z_i	≥ 115 kΩ
Permissible system leakage capacitance C_e	≤ 5 µF
Permissible extraneous DC voltage U_{fg}	≤ 700 V

Response values

Response value R_{an1}	R_{an2}…200 kΩ (46 kΩ)*
Response value R_{an2}	5 kΩ…R_{an1} (23 kΩ)*
Relative uncertainty R_{an}	±15 %, at least ±2 kΩ
Hysteresis R_{an}	25 %, at least 1 kΩ
Undervoltage detection *U*<	10 V…*U*> (off/10 V)*
Overvoltage detection *U*>	*U*<…500 V (off/500 V)*
Relative uncertainty *U*	±5 %, at least ±5 V
Relative uncertainty depending on the frequency ≥ 400 Hz	-0,015 %/Hz
Hysteresis *U*	5 %, at least 5 V

Time response

Response time t_{an} of $R_F = 0{,}5 \times R_{an}$ and C_e=1 µF according to IEC 61557-8	≤ 1 s
Start-up delay *t*	0…10 s (0 s)*
Response delay t_{on}	0…99 s (0 s)*
Delay on release t_{off}	0…99 s (0 s)*

Displays, memory

Display	LC display, multi-functional, not illuminated
Display range measured value insulation resistance (R_F)	1 kΩ…2 MΩ
Operating uncertainty	±15 %, at least ±2 kΩ
Display range measured value nominal system voltage (U_n)	0…500 VRMS
Operating uncertainty	±5 %, at least ±5 V
Display range measured value system leakage capacitance of R_F > 10 kΩ (only "dc" mode)	0…17 µF
Operating uncertainty of RF ≥ 20 kΩ and C_e ≤ 5 µF	±15 %, at least ± 0,1 µF
Password	off/0…999 (0, off)*
Fault memory alarm messages	on/(off)*

Interface

Interface/protocol	RS-485/BMS, Modbus RTU, isoData
Baud rate	BMS (9.6 kBit/s), Modbus RTU (selectable), isoData (115.2 kBits/s)
Cable length (9.6 kBits/s)	≤ 1200 m
Cable: twisted pairs, shield connected to PE on one side	min. J-Y(St)Y 2 x 0,6
Terminating resistor	120 Ω (0.25 W), internal, can be connected
Device address, BMS bus, Modbus RTU	3…90 (3)*

Switching elements

Switching elements	2 x 1 contacts, common terminal 11				
Operating principle	N/C operation/N/O operation (N/O operation)*				
Electrical endurance, number of cycles	10 000				
Contact data acc. to IEC 60947-5-1:					
Utilisation category	AC-12	AC-14	DC-12	DC-12	DC-12
Rated operational voltage	230 V	230 V	24 V	110 V	220 V
Rated operational current	5 A	2 A	1 A	0.2 A	0,1 A
Minimum contact rating	1 mA at AC/DC ≥ 10 V				

Environment/EMC

EMC	IEC 61326-2-4

Ambient temperatures:

Operation	-40…+70 °C
Transport	-40…+85 °C
Storage	-40…+70 °C

Classification of climatic conditions acc. to IEC 60721 (related to temperature and relative humidity)**:**

Stationary use (IEC 60721-3-3)	3K22
Transport (IEC 60721-3-2)	2K11
Long-time storage (IEC 60721-3-1)	1K22

Classification of mechanical conditions acc. to IEC 60721:

Stationary use (IEC 60721-3-3)	3M11
for option W	3M12
Transport (IEC 60721-3-2)	2M4
Long-term storage (IEC 60721-3-1)	1M12

Connection

Connection type	screw-type terminal or push-wire terminal

Screw-type terminals:

Nominal current	≤10 A
Tightening torque	0.5…0.6 Nm (5…7 lb-in)
Conductor sizes	AWG 24-12
Stripping length	8 mm
Rigid/flexible	0.2…2.5 mm²
Flexible with ferrules with/without plastic sleeve	0.25…2.5 mm²
Multi-conductor	
rigid /flexible	0.2…1.5 mm²
flexible with ferrules without plastic sleeve	0.25…1.5 mm²
flexible with TWIN ferrules with plastic sleeve	0.5…1.5 mm²

Push-wire terminals:

Nominal current	≤10 A
Conductor sizes	AWG 24-14
Stripping length	10 mm
Rigid	0.2…2.5 mm²
Flexible without ferrules	0.75…2.5 mm²
Flexible with ferrules with/without plastic sleeve	0.25…2.5 mm²
Multi-conductor flexible with TWIN ferrules with plastic sleeve	0.5…1.5 mm²
Opening force	50 N
Test opening, diameter	2.1 mm

Other

Operating mode	continuous operation
Mounting	cooling slots must be ventilated vertically
Degree of protection, built-in components (DIN EN 60529)	IP30
Degree of protection, terminals (DIN EN 60529)	IP20
Enclosure material	polycarbonate
DIN rail mounting acc. to	IEC 60715
Screw fixing	2 x M4 with mounting clip
Documentation number	D00221
Weight	≤ 150 g

( )* = factory setting

Dimension diagram (dimensions in mm)

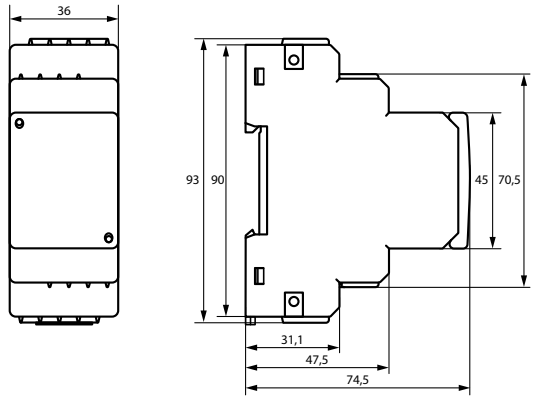

Wiring diagram

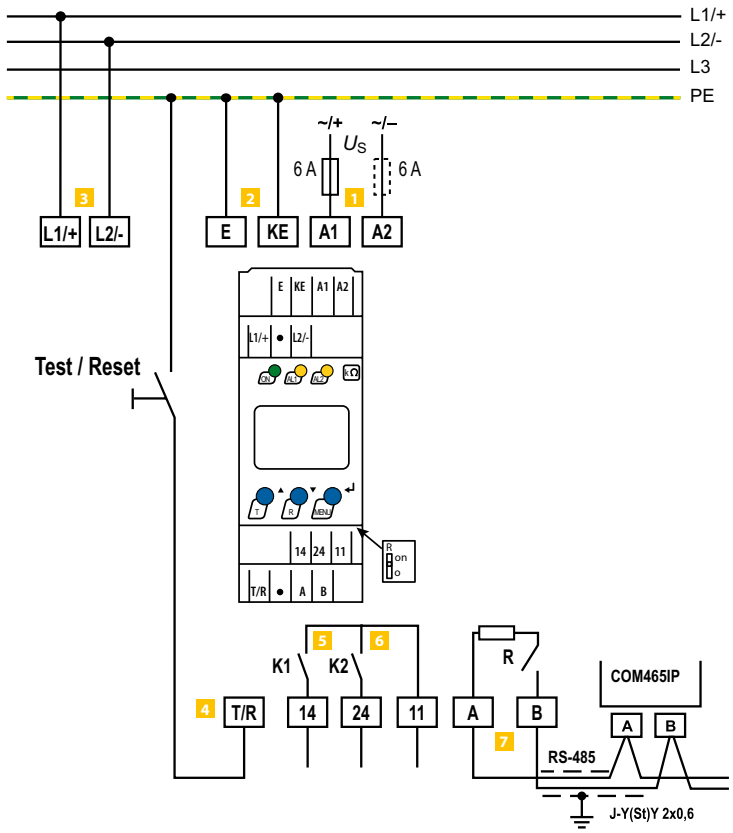

1	**A1, A2**	Connection to the supply voltage via fuse (line protection). If supplied from an IT system, both lines have to be protected by a fuse.*
2	**E, KE**	Connect each terminal separately to PE: The same wire cross section as for A1, A2 is to be used.
3	**L1/+, L2/-**	Connection to the IT system to be monitored
4	**T/R**	Connection for the external combined test and reset button.
5	**11, 14**	Connection to alarm relay K1
6	**11, 24**	Connection to alarm relay K2
7	**A, B**	RS-485 communication interface with connectable terminating resistance.

* **For UL applications:**

Only use 60/75°C copper lines!
For UL and CSA applications, it is mandatory to use 5 A fuses for the protection of the supply voltage.

ISOMETER® isoRW425

Insulation monitoring device for unearthed AC, AC/DC and DC systems (IT systems) for railway applications up to 3(N)AC, AC/DC 440 V

AC/DC

Typical applications

- AC control circuits in rolling stock according to EN 50155
- AC, DC or AC/DC circuits
- Systems including switched-mode power supplies
- Small AC-IT systems e. g. lighting systems

Approvals

Device features

- Monitoring of the insulation resistance (R mode) or the insulation impedance (Z mode) of unearthed 3(N)AC, AC and DC systems (IT systems) with galvanically connected rectifiers or inverters
- Insulation impedance (Z mode) for 50 Hz or 60 Hz
- Measurement of the nominal system voltage (RMS) with undervoltage and overvoltage detection
- Measurement of DC voltages system to earth (L+/PE and L-/PE)
- Automatic adaptation to the system leakage capacitance up to 300 µF in R mode and 1µF in Z mode
- Automatic device self test with connection monitoring
- Selectable start-up delay, response delay and delay on release
- Two separately adjustable response ranges of 1…990 kΩ (Alarm 1, Alarm 2)
- Alarm signalling via LEDs (AL1, AL2), a display and alarm relays (K1, K2)
- N/C operation or N/O operation selectable
- Measured value indication via multi-functional LCD
- Fault memory can be activated
- RS-485 (galvanically isolated) interface including the following protocols:
  – BMS interface (Bender measuring device interface) for data exchange with other Bender components
  – Modbus RTU
  – isoData (for continuous data output)
- Password protection to prevent unauthorised changes of parameters

Standards

The ISOMETER® has been developed in compliance with the following standards:

- DIN EN 61557-8 (VDE 0413-8)
- DIN EN 50155
- IEC 61557-8
- DIN EN 45545-2

Further information

For further information refer to our product range on www.bender.de.

Ordering information

Type	Nominal system voltage U_n	Supply voltage U_s	System leakage capacitance C_e	Art. No.	
				Screw-type terminal	Push-wire terminal
isoRW425-D4W-4	3(N)AC, AC 0…440 V/DC 0…440 V	AC 100…240 V, 47…63 Hz / DC 24…240 V	< 300 µF	B91037000W	B71037000W

Accessories

Description	Art. No.
Mounting clip for screw mounting (1 piece per device)	B98060008

Insulation coordination acc. to IEC 60664-1/IEC 60664-3

Definitions:	
Measuring circuit (IC1)	L1/+, L2/-
Supply circuit (IC2)	A1, A2
Output circuit (IC3)	11, 14, 24
Control circuit (IC4)	E, KE, T/R, A, B
Rated voltage	440 V
Overvoltage category	III
Rated impulse voltage:	
IC1/(IC2-4)	6 kV
IC2/(IC3-4)	4 kV
IC 3/(IC4)	4 kV
Rated insulated voltage:	
IC1/(IC2-4)	500 V
IC2/(IC3-4)	250 V
IC 3/(IC4)	250 V
Polution degree	3
Protective separation (reinforced insulation) between:	
IC1/(IC2-4)	Overvoltage category III, 600 V
IC2/(IC3-4)	Overvoltage category III, 300 V
IC 3/(IC4)	Overvoltage category III, 300 V
Voltage test (routine test) according to IEC 61010-1:	
IC2/(IC3-4)	AC 2,2 kV
IC 3/(IC4)	AC 2,2 kV

Supply voltage

Supply voltage U_s	AC 100…240 V/DC 24…240 V
Tolerance of U_s	-30…+15 %
Frequency range U_s	47…63 Hz
Power consumption	≤ 3 W, ≤ 9 VA

IT system being monitored

Nominal system voltage U_n	3(N)AC, AC 0…440V/DC 0…440 V
Nominal system voltage range U_n (UL508)	AC/DC 0…400 V
Tolerance of U_n	+15 %
Frequency range of U_n	DC, 15…460 Hz

Measuring circuit

Measuring voltage U_m	± 12 V
Measuring current I_m at R_F, $Z_F = 0\ \Omega$	≤ 110 µA
Internal resistance R_i, Z_i	≥ 115 kΩ
Permissible system leakage capacitance C_e (R mode)	≤ 300 µF
Permissible system leakage capacitance C_e (Z mode)	≤ 1 µF
Permissible extraneous DC voltage U_{fg}	≤ 700 V

Response values

Response value R_{an1}	2…990 kΩ (40 kΩ)*
Response value R_{an2}	1…980 kΩ (10 kΩ)*
Relative uncertainty R_{an} (R mode or $Z_F \approx R_F$)	± 15 %, at least ±1 kΩ
Hysteresis R_{an}	25 %, at least 1 kΩ
Response value Z_{an1}	11…500 kΩ (off)*
Response value Z_{an2}	10…490 kΩ (off)*
Relative uncertainty Z_{an}	± 15 %, at least ±1 kΩ
Hysteresis Z_{an}	25 %, at least 1 kΩ
Undervoltage detection	10…499 V (off)*
Overvoltage detection	11…500 V (off)*
Relative uncertainty U	± 5 %, at least ± 5 V
Relative uncertainty depending on the frequency ≥ 400 Hz	-0.015 %/Hz
Hysteresis U	5 %, at least 5 V

Time response

Response time t_{an} of $R_F = 0.5 \times R_{an}$ and C_e=1 µF according to IEC 61557-8	≤ 10 s
Response time t_{an} of $Z_F = 0.5 \times Z_{an}$	≤ 5 s
Start-up delay t	0…10 s (0 s)*
Response delay t_{on}	0…99 s (0 s)*
Delay on release t_{off}	0…99 s (0 s)*

Displays, memory

Display	LC display, multi-functional, not illuminated
Display range measured value insulation resistance (R_F)	1 kΩ…4 MΩ
Display range measured value impedance (Z_F) with f_n = 50/60 Hz	1 kΩ…1 MΩ
Operating uncertainty (R_F in R mode, Z_F in Z mode)	± 15 %, at least ±1 kΩ
Display range measured value nominal system voltage (U_n)	0…500 V r.m.s.
Operating uncertainty	± 5 %, at least ± 5 V
Display range measured value system leakage capacitance of R_F > 10 kΩ	0…300 µF
Operating uncertainty	± 15 %, at least ± 2 µF
Display range measured value system leakage capacitance of Z_F > 10 kΩ	1 nF…1 µF
Operating uncertainty ($Z_F \approx X_C$)	± 15 %, at least ± 2 nF
Password	off/0…999 (0, off)*
Fault memory alarm messages	on/(off)*

Interface

Interface/protocol	RS-485/BMS, Modbus RTU, isoData
Baud rate	BMS (9.6 kbit/s), Modbus RTU (selectable), isoData (115.2 kbits/s)
Cable length (9.6 kbits/s)	≤ 1200 m
Cable: twisted pairs, shield connected to PE on one side	min. J-Y(St)Y 2x0.6
Terminating resistor	120 Ω (0,25 W), internal, can be connected
Device address, BMS bus, Modbus RTU	3…90 (3)*

Switching elements

Switching elements	2 x 1 N/O contacts, common terminal 11
Operating principle	N/C operation/N/O operation (N/O operation)*
Electrical endurance, number of cycles	10000

Contact data acc. to IEC 60947-5-1:

Utilisation category	AC-12	AC-14	DC-12	DC-12	DC-12
Rated operational voltage	230 V	230 V	24 V	110 V	220 V
Rated operational current	5 A	2 A	1 A	0.2 A	0.1 A
Minimum contact rating	1 mA at AC/DC ≥ 10 V				

Environment/EMC

EMC	IEC 61326-2-4, DIN EN50121-3-2

Ambient temperatures:

Operation	-40…+70 °C
Transport	-50…+85 °C
Storage	-55…+80 °C

Classification of climatic conditions acc. to IEC 60721 (related to temperature and relative humidity)**:**

Stationary use (IEC 60721-3-3)	3K22
Transport (IEC 60721-3-2)	2K11
Long-time storage (IEC 60721-3-1)	1K23

Classification of mechanical conditions acc. to IEC 60721

Stationary use (IEC 60721-3-3)	3M12
Transport (IEC 60721-3-2)	2M4
Long-term storage (IEC 60721-3-1)	1M12

Connection

Connection type	screw-type terminal or push-wire terminal

Screw-type terminals:

Nominal current	≤10 A
Tightening torque	0.5…0.6 Nm (5…7 lb-in)
Conductor sizes	AWG 24-12
Stripping length	8 mm
Rigid/flexible	0.2…2.5 mm²
Flexible with ferrules with/without plastic sleeve	0.25…2.5 mm²
Multi-conductor	
rigid /flexible	0.2…1.5 mm²
flexible with ferrules without plastic sleeve	0.25…1.5 mm²
flexible with TWIN ferrules with plastic sleeve	0.5…1.5 mm²

Push-wire terminals:

Nominal current	≤10 A
Conductor sizes	AWG 24-14
Stripping length	10 mm
Rigid	0.2…2.5 mm²
Flexible without ferrules	0.75…2.5 mm²
Flexible with ferrules with/without plastic sleeve	0.25…2.5 mm²
Multi-conductor flexible with TWIN ferrules with plastic sleeve	0.5…1.5 mm²
Opening force	50 N
Test opening, diameter	2.1 mm

Other

Operating mode	continuous operation
Mounting	cooling slots must be ventilated vertically
Degree of protection, built-in components (DIN EN 60529)	IP30
Degree of protection, terminals (DIN EN 60529)	IP20
Enclosure material	polycarbonate
DIN rail mounting acc. to	IEC 60715
Screw fixing	2 x M4 with mounting clip
Flammability class	UL94 V-0
Documentation number	D00052
Weight	≤ 150 g

( )* = factory setting

Dimension diagram (dimensions in mm)

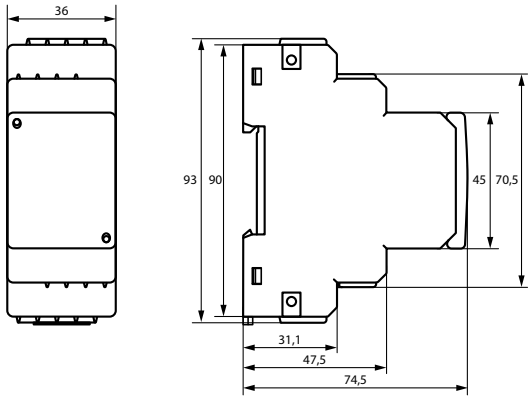

Wiring diagram

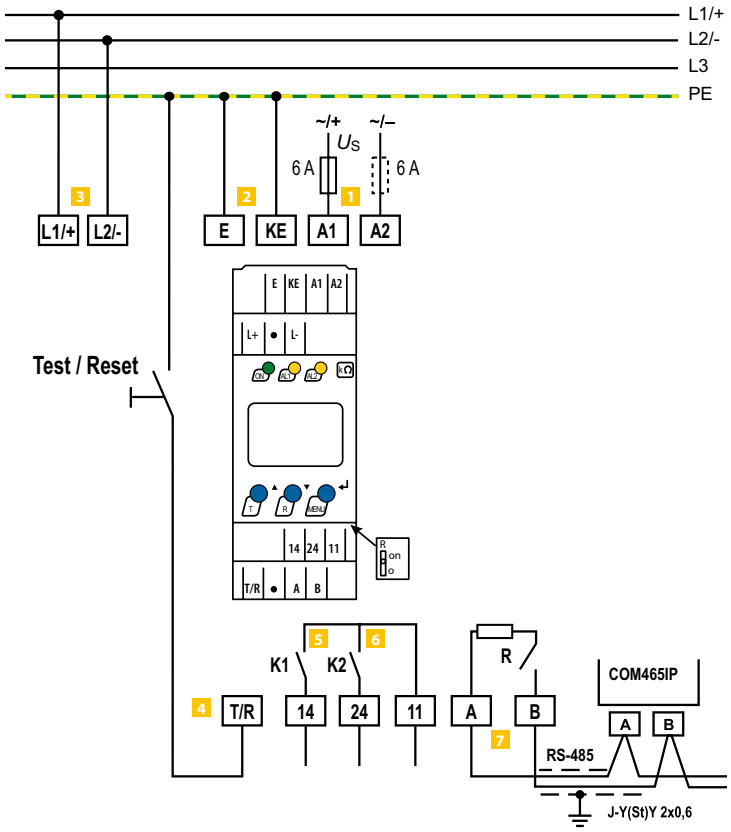

1	**A1, A2**	Connection to the supply voltage via fuse (line protection). If supplied from an IT system, both lines have to be protected by a fuse.*
2	**E, KE**	Connect each terminal separately to PE: The same wire cross section as for A1, A2 is to be used.
3	**L1/+, L2/–**	Connection to the 3(N)AC, AC or DC system to be monitored
4	**T/R**	Connection for the external combined test and reset button.
5	**11, 14**	Connection to alarm relay K1
6	**11, 24**	Connection to alarm relay K2
7	**A, B**	RS-485 communication interface with connectable terminating resistance.

* **For UL applications:**

Only use 60/75°C copper lines!
For UL and CSA applications, it is mandatory to use 5 A fuses for the protection of the supply voltage.

ISOMETER® isoUG425

Insulation monitoring device for unearthed DC systems (IT systems) up to 120 V

DC

Typical applications

- Simple battery systems
- Conveniently sized DC control voltage systems
- DC lamp circuits

Approvals

Device features

- Monitoring of asymmetrical insulation resistances for unearthed DC systems
- Measurement of the system voltage (r.m.s. and DC) with undervoltage and overvoltage detection
- Measurement of the system DC voltages to earth (L+/PE and L-/PE)
- Configurable adaptation to the system leakage capacitance up to 5 µF
- Selectable start-up delay, response delay and delay on release
- Two separately adjustable response value ranges of 1…100 kΩ (Alarm 1, Alarm 2)
- Alarm signalling via LEDs (AL1, AL2), a display and alarm relays (K1, K2)
- N/C operation or N/O operation of the relays selectable
- Measured value indication via multi-functional LCD
- Fault memory can be activated
- RS-485 (galvanically isolated) including the following protocols:
  - BMS interface (Bender measuring device interface) for data exchange with other Bender components
  - Modbus RTU
  - IsoData (for continuous data output)
- Password protection to prevent unauthorised parameter changes

Standards

The ISOMETER® has been developed in compliance with the following standards:

- DIN EN 50155

Further information

For further information refer to our product range on www.bender.de.

Ordering information

Type	Supply voltage U_s	Nominal voltage U_n	System leakage capacitance	Art. No.
				push-wire terminal
isoUG425-D4-4	AC 100…240 V, 47…63 Hz / DC 24…240 V	DC 12…120 V	≤ 50 µF	B71036320

Accessories

Description	Art. No.
Mounting clip for screw mounting (1 piece per device)	B98060008

Insulation coordination acc. to IEC 60664-1/IEC 60664-3

Definitions:	
Measuring circuit (IC1)	L1/+, L2/-
Supply circuit (IC2)	A1, A2
Output circuit(IC3)	11, 14, 24
Control circuit (IC4)	E, KE, T/R, A, B
Rated voltage	400 V
Overvoltage category	III
Rated impulse voltage:	
IC1/(IC2-4)	6 kV
IC2/(IC3-4)	4 kV
IC 3/IC4	4 kV
Rated insulated voltage:	
IC1/(IC2-4)	400 V
IC2/(IC3-4)	250 V
IC 3/IC4	250 V
Pollution	3
Protective separation (reinforced insulation) between:	
IC1/(IC2-4)	Overvoltage category III, 600 V
IC2/(IC3-4)	Overvoltage category III, 300 V
IC 3/IC4	Overvoltage category III, 300 V
Voltage test (routine test) according to IEC 61010-1:	
IC2/(IC3-4)	AC 2.2 kV
IC 3/IC4	AC 2.2 kV

Supply voltage

Supply voltage U_s	AC 100…240 V/DC 24…240 V
Tolerance of U_s	-30…+15 %
Frequency range U_s	47…63 Hz
Power consumption	≤ 3 W, ≤ 9 VA

IT system being monitored

Nominal system voltage U_n	DC 12…120 V
Tolerance of U_n	+20 %

Measuring circuit

Internal resistance R_i	≥ 115 kΩ
Permissible system leakage capacitance C_e	≤ 50 µF

Response values

Response value R_{an1}	2…100 kΩ (50 kΩ)*
Response value R_{an2}	1…95 kΩ (25 kΩ)*
Relative uncertainty R_{an}	±15 %, at least ±2 kΩ
Hysteresis R_{an}	25 %, at least 1 kΩ
Undervoltage detection U_{DC}	8…143 V (off)*
Overvoltage detection U_{DC}	8.1…144 V (off)*
Relative uncertainty U_{DC}	±5 %, at least ±0.5 V
Hysteresis U_{DC}	5 %, at least 1 V

Time response

Response time t_{an} at $R_F = 0.5 \times R_{an}$ and C_e=1 µF acc. to IEC 61557-8	≤ 1 s
Start-up delay t	0…10 s (0 s)*
Response delay t_{on}	0…99 s (0 s)*
Delay on release t_{off}	0…99 s (0 s)*

Displays, memory

Display	LC display, multi-functional, not illuminated
Display range measured value insulation resistance (R_F)	1 kΩ…1 MΩ
Operating uncertainty	±15 %, at least ±2 kΩ
Display range measured value nominal system voltage (U_n)	0…150 V ($R_F = \infty$: 300 VP; R_F = 0 kΩ : 150 VP)
Operating uncertainty U_{DC}	±5 %, at least ±0.5 V
Operating uncertainty U_{RMS}	±5 %, at least ±1.5 V
Password	off/0…999 (0, off)*
Fault memory alarm messages	on/(off)*

Interface

Interface/protocol	RS-485/BMS, Modbus RTU, isoData
Baud rate	BMS (9.6 kbit/s), Modbus RTU (selectable), isoData (115.2 kbits/s)
Cable length (9.6 kbits/s)	≤ 1200 m
Cable: twisted pairs, shield connected to PE on one side	min. J-Y(St)Y 2x0.6
Terminating resistor	120 Ω (0.25 W), internal, can be connected
Device address, BMS bus, Modbus RTU	3…90 (3)*

Switching elements

Switching elements	2 x 1 N/O contacts, common terminal 11
Operating principle	N/C operation/N/O operation (N/O operation)*
Electrical endurance, number of cycles	10,000

Contact data acc. to IEC 60947-5-1:

Utilisation category	AC-12	AC-14	DC-12	DC-12	DC-12
Rated operational voltage	230 V	230 V	24 V	110 V	220 V
Rated operational current	5 A	2 A	1 A	0.2 A	0.1 A
Minimum contact rating	1 mA at AC/DC ≥ 10 V				

Environment/EMC

EMC	IEC 61326-2-4

Ambient temperatures:

Operation	-40…+70 °C
Transport	-40…+85 °C
Storage	-40…+70 °C

Classification of climatic conditions acc. to IEC 60721 (related to temperature and relative humidity)**:**

Stationary use (IEC 60721-3-3)	3K22
Transport (IEC 60721-3-2)	2K11
Long-term storage (IEC 60721-3-1)	1K22

Classification of mechanical conditions acc. to IEC 60721:

Stationary use (IEC 60721-3-3)	3M11
Transport (IEC 60721-3-2)	2M4
Long-term storage (IEC 60721-3-1)	1M12

Connection

Connection type	push-wire terminal
Nominal current	≤10 A
Conductor sizes	AWG 24-14
Stripping length	10 mm
Rigid	0.2…2.5 mm²
Flexible without ferrules	0.75…2.5 mm²
Flexible with ferrules with/without plastic sleeve	0.25…2.5 mm²
Multi-conductor flexible with TWIN ferrules with plastic sleeve	0.5…1.5 mm²
Opening force	50 N
Test opening, diameter	2.1 mm

Other

Operating mode	continuous operation
Mounting	cooling slots must be ventilated vertically
Degree of protection, built-in components (DIN EN 60529)	IP30
Degree of protection, terminals (DIN EN 60529)	IP20
Enclosure material	polycarbonate
DIN rail mounting acc. to	IEC 60715
Screw fixing	2 x M4 with mounting clip
Documentaion number	D00220
Weight	≤ 150 g

( )* = Factory setting

Dimension diagram (dimensions in mm)

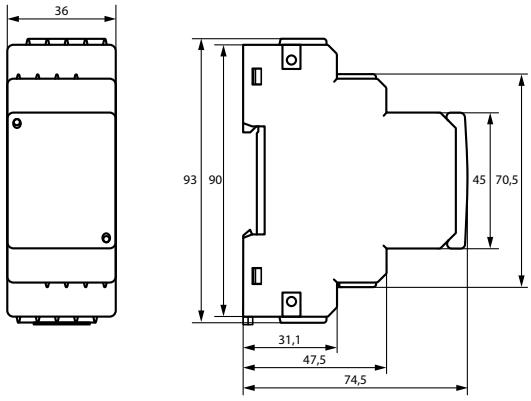

Wiring diagram

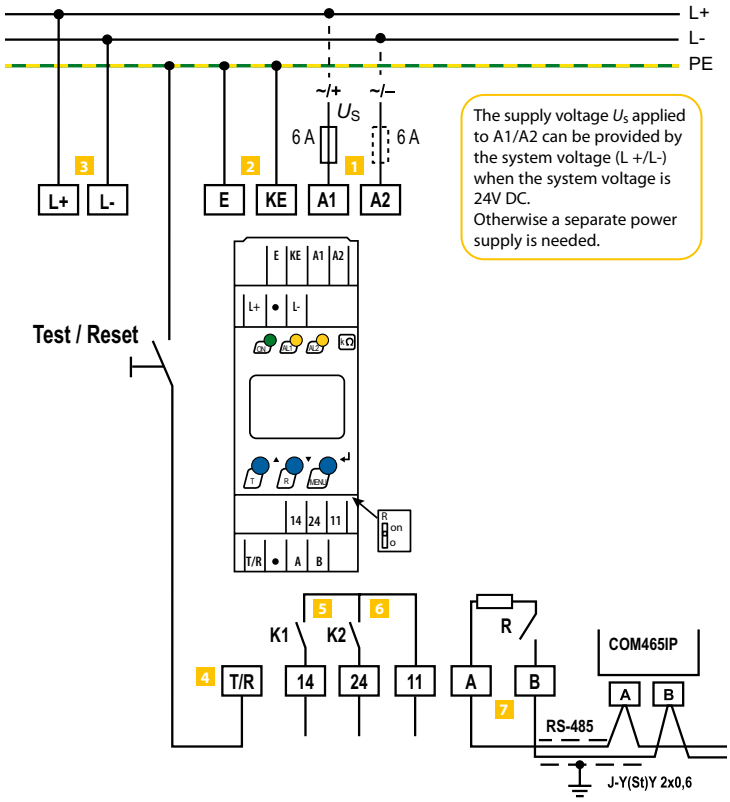

1	A1, A2	Connection to the supply voltage via fuse (line protection). If being supplied from an IT system, both lines have to be protected by a fuse.*
2	E, KE	Connect each terminal separately to PE: The same wire cross section as for A1, A2 is to be used
3	L1/+, L2/–	Connection to the DC system to be monitored
4	T/R	Connection for the external combined test and reset button
5	11, 14	Connection to alarm relay K1
6	11, 24	Connection to alarm relay K2
7	A, B	RS-485 communication interface with connectable terminating resistor Example: Connection of a BMS Ethernet gateway COM465IP

* **For UL applications:**
Only use 60/75°C copper lines!
For UL and CSA applications, it is mandatory to use 5 A fuses for the protection of the supply voltage.

ISOMETER® isoES425

Insulation monitoring device for unearthed AC, AC/DC and DC systems (IT systems) for energy storage devices up to AC/DC 400 V

AC/DC

Typical applications

- Monitoring the earth connection during network operation and monitoring the electrical installation during isolated operation.

Approvals

Device features

- Insulation monitoring for unearthed systems AC/DC
- Measurement of the mains voltage (r.m.s.) with undervoltage and overvoltage detection
- Measurement of DC voltages system to earth (L1+/PE und L2-/PE)
- Automatic adaptation to the system leakage capacitance up to 100 µF
- Selectable start-up delay, response delay and delay on release
- Two separately adjustable response value ranges of 1…990 kΩ (Alarm 1, Alarm 2)
- Alarm signalling via LEDs (AL1, AL2), a display and alarm relays (K1, K2)
- Automatic device self test with connection monitoring
- N/C operation or N/O operation of the relays selectable
- Measured value indication via multifunctional LCD
- Fault memory can be activated
- RS-485 (galvanically isolated) including the following protocols:
  - BMS interface (Bender measuring device interface) for data exchange with other Bender components
  - IsoData (for continuous data output)
- Password protection to prevent unauthorised parameter changes

Standards

The ISOMETER® has been developed in compliance with the following standards:

- DIN EN 61557-8 (VDE 0413-8)
- IEC 61557-8

Further information

For further information refer to our product range on www.bender.de.

Ordering information

Type	Nominal system voltage U_n	Supply voltage U_s	System leakage capacitance C_e	Art. No.
				Push-wire terminal
isoES425-D4-4	3 (N)AC, AC 0…400 V/DC 0…400 V	AC 100…240 V, 47…63 Hz / DC 24…240 V	< 100 µF	B71037020

Accessories

Description	Art. No.
Mounting clip for screw mounting (1 piece per device)	B98060008

Insulation coordination acc. to IEC 60664-1/IEC 60664-3

Definitions:	
Measuring circuit (IC1)	L1/+, L2/-
Supply circuit (IC2)	A1, A2
Output circuit (IC3)	11, 14, 24
Control circuit (IC4)	E, KE, T/R, A, B
Rated voltage	400 V
Overvoltage category	III
Rated impulse withstand voltage:	
IC1/(IC2-4)	6 kV
IC2/(IC3-4)	4 kV
IC 3/(IC4)	4 kV
Rated insulation voltage:	
IC1/(IC2-4)	400 V
IC2/(IC3-4)	250 V
IC 3/IC4	250 V
Pollution degree	3
Protective separation (reinforced insulation) between:	
IC1/(IC2-4)	Overvoltage category III, 600 V
IC2/(IC3-4)	Overvoltage category III, 300 V
IC 3/(IC4)	Overvoltage category III, 300 V
Voltage tests (routine test) acc. to IEC 61010-1:	
IC2/(IC3-4)	DC 2.2 kV
IC 3/(IC4)	AC 2.2 kV

Supply voltage

Supply voltage U_s	AC 100…240 V/DC 24…240 V
Tolerance of U_s	-30…+15 %
Frequency range U_s	47…63 Hz
Power consumption	≤ 3 W, ≤ 9 VA

IT system being monitored

Nominal system voltage U_n	3(N)AC, AC 0…400 V/DC 0…400 V
Tolerance of U_n	25%
Frequency range of U_n	DC, 15…460 Hz

Measuring circuit

Measuring voltage U_m	± 12 V
Measuring current I_m at R_F	≤ 110 µA
Internal resistance R_i	≥ 115 kΩ
Permissible leakage capacitance C_e	≤ 100 µF
Permissible external DC voltage U_{fg}	≤ 700 V

Response values

Response value R_{an1}	2…990 kΩ (69 kΩ)*
Response value R_{an2}	1…980 kΩ (23 kΩ)*
Operating uncertainty R_{an}	± 15 %, at least ±1 kΩ
Hysteresis R_{an}	25 %, at least 1 kΩ
Undervoltage detection U	10…499 V (off)*
Overvoltage detection U	11…500 V (off)*
Operating uncertainty U	± 5 %, at least ± 5 V
Frequency dependent operating uncertainty ≥ 400 Hz	-0.015 %/Hz
Hysteresis U	5 %, at least 5 V

Time response

Response time t_{an} at R_F= 0.5 x R_{an} and C_e=1 µF acc. to IEC 61557-8	≤ 10 s
Start-up delay t	0…10 s (0 s)*
Response delay t_{on}	0…99 s (0 s)*
Delay on release t_{off}	0…99 s (0 s)*

Displays, memory

Display	LC display, multi-functional, not illuminated
Display range measured value insulation resistance (R_F)	1 kΩ…4 MΩ
Operating uncertainty	± 15 %, at least ±1 kΩ
Display range measured nominal system voltage value (U_n)	0…500 V r.m.s
Operating uncertainty U	± 5 %, at least ± 5 V
Display range measured leakage capacitance value for R_F > 10 kΩ	0…105 µF
Operating uncertainty	± 15 %, mindestens ± 2 µF
Password	off/0…999 (0, off)*
Fault memory alarm message	on/(off)*

Interface

Interface/protocol	RS-485/BMS, isoData
Baud rate	BMS (9.6 kBit/s), isoData (115.2 kBits/s)
Cable length (9.6 kBits/s	≤ 1200 m
Cable: twisted pair, shield connected to PE	min. J-Y(St)Y 2x0.6
Terminating resistor	120 Ω (0.25 W), internal, can be connected
Device address, BMS bus	3…90 (3)*

Switching elements

Switching elements	2 x 1 NO contacts, common terminal 11
Operating principle	N/C operation/N/O operation (N/C operation)*
Electrical endurance, number of cycles	10000

Contact data acc. to IEC 60947-5-1:

Utilisation category	AC-12	AC-14	DC-12	DC-12	DC-12
Rated operational voltage	230 V	230 V	24 V	110 V	220 V
Rated operational current	5 A	2 A	1 A	0.2 A	0.1 A
Minimum contact rating	1 mA at AC/DC ≥ 10 V				

Environment/EMC

EMC	IEC 61326-2-4

Ambient temperatures:

Operation	-25…+70 °C
Transport	-40…+85 °C
Storage	-25…+70 °C

Classification of climatic conditions acc. to IEC 60721 (related to temperature and relative humidity)**:**

Stationary use (IEC 60721-3-3)	3K22
Transport (IEC 60721-3-2)	2K11
Long-time storage (IEC 60721-3-1)	1K22

Classification of mechanical conditions acc. to IEC 60721:

Stationary use (IEC 60721-3-3)	3M22
Transport (IEC 60721-3-2)	2M4
Long-term storage (IEC 60721-3-1)	1M12

Connection

Connection type	Push-wire terminal
Nominal current	≤ 10 A
Conductor sizes	AWG 24-14
Stripping length	10 mm
rigid	0.2…2.5 mm²
flexible without ferrules	0.75…2.5 mm²
flexible with ferrules, with/without plastic collar	0.25…2.5 mm²
Multiple conductor, flexible with TWIN ferrule with plastic sleeve	0.5…1.5 mm²
Opening force	50 N
Test opening, diameter	2.1 mm

Other

Operating mode	Continuous operation
Mounting	Cooling slots must be ventilated vertically
Degree of protection, built-in components (DIN EN 60529)	IP30
Degree of protection, terminals (DIN EN 60529)	IP20
Enclosure material	Polycarbonate
DIN rail mounting acc. to	IEC 60715
Screw fixing	2 x M4 with mounting clip
Weight	≤ 150 g

( )* = Factory setting

Dimension diagram (dimensions in mm)

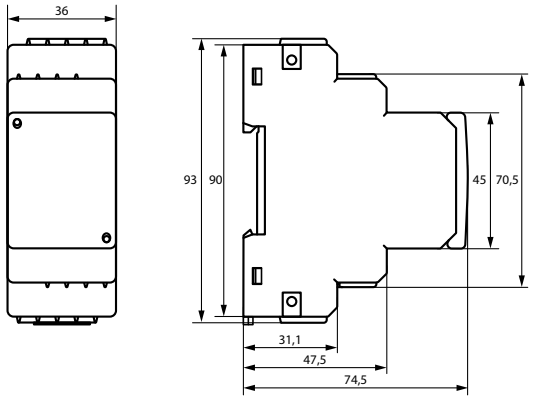

Wiring diagram

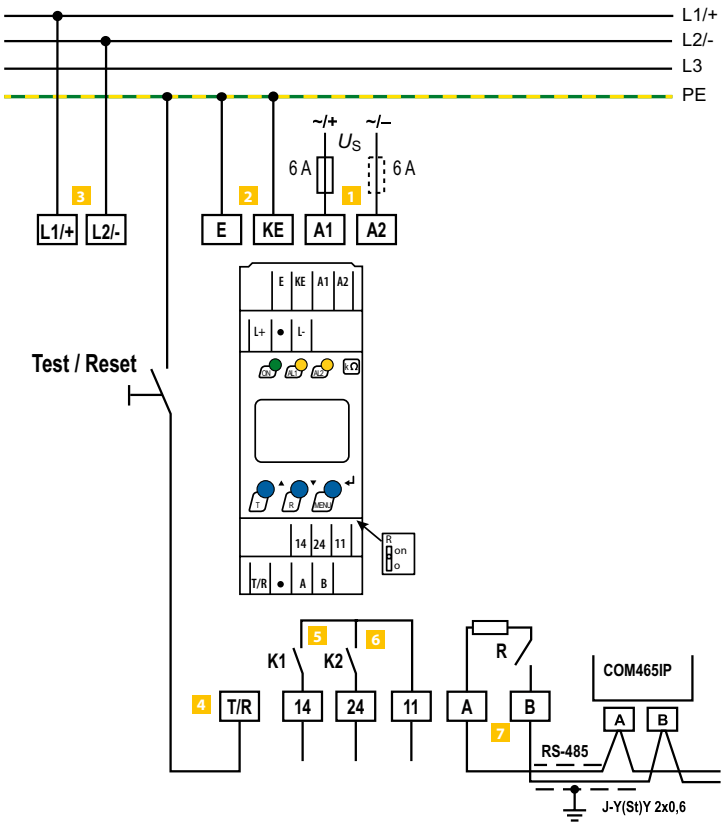

1	**A1, A2**	Connection to the supply voltage via a fuse. If supplied from an IT system, both lines have to be protected by a fuse.*
2	**E, KE**	Connect each terminal separately to PE: The same wire cross section as for A1, A2 is to be used.
3	**L1/+, L2/–**	Connection to the AC or DC system to be monitored.
4	**T/R**	Connection for external combined test and reset button.
5	**11, 14**	Connection to alarm relay K1
6	**11, 24**	Connection to alarm relay K2
7	**A, B**	RS-485 communication interface with selectable terminating resistance.

* **For UL applications:**
Only use 60/75°C copper lines!
For UL and CSA applications, it is mandatory to use 5 A fuses for the protection of the supply voltage.

ISOMETER® isoHV425… with coupling device AGH422

Insulation monitoring device for unearthed AC, AC/DC and DC systems (IT system)
up to 3(N)AC, AC 1000 V, DC 1000 V

AC/DC

Typical applications

- AC main circuits up to 1000 V
- DC main circuits up to 1000 V
- Systems including switched-mode power supplies

Approvals

Device features

- Monitoring the insulation resistance for unearthed AC/DC systems
- Measurement of the system voltage (true r.m.s.) with undervoltage and overvoltage detection
- Measurement of DC system voltages to earth (L1+/PE and L2-/PE)
- Automatic adaptation to the system leakage capacitance up to 150 µF
- Selectable start-up delay, response delay and delay on release
- Two separately adjustable response value ranges of 10…500 kΩ (Alarm 1, Alarm 2)
- Alarm signalling via LEDs (AL1, AL2), a display and alarm relays (K1, K2)
- Automatic device self test with connection monitoring
- Selectable N/C or N/O relay operation
- Measured value indication via a multifunctional LC display
- Fault memory can be activated
- Password protection to prevent unauthorised parameter changes

isoHV425-D4-4

- RS-485 (galvanically separated) including the following protocols:
  – BMS interface (Bender measuring device interface) for data exchange with other Bender components
  – Modbus RTU
  – IsoData (for continuous data output)

isoHV425-D4M-4

- 0(4)…20 mA, 0…400 µA, 0…10 V analogue output (galvanically separated)

Standards

The ISOMETER® has been developed in compliance with the following standards:

- DIN EN 61557-8 (VDE 0413-8)
- DIN EN 50155
- EN 45545-2
- IEC 61557-8
- EN 61373 cat I class B

Further information

For further information refer to our product range on www.bender.de.

Ordering information

Type	Supply voltage U_s	Nominal voltage U_n	Version	Art. No.	
				Screw-type terminal	Push-wire terminal
isoHV425-D4-4 with AGH422	AC 100…240 V, 47…63 Hz DC 24…240 V	AC 0…1000 V DC 0…1000 V	Serial interface	B91036501S	B71036501
isoHV425W-D4-4 with AGH422W				B91036501W	B71036501W
isoHV425-D4M-4 with AGH422			Analogue output	–	B71036503
isoHV425W-D4M-4 with AGH422W				B91036503W	B71036503W

Accessories

Description	Art. No.
Mounting clip for screw mounting (1 piece per device)	B98060008

Insulation coordination acc. to IEC 60664-1/IEC 60664-3

Definitions:	
Supply circuit (IC2)	A1, A2
Output circuit (IC3)	11, 14, 24
Control circuit (IC4)	Up, KE, T/R, A, B, AK1, GND, AK2, M+, M-
Rated voltage	240 V
Overvoltage category	III
Rated impulse voltage:	
IC2/(IC3-4)	4 kV
IC 3/IC4	4 kV
Rated insulation voltage:	
IC2/(IC3-4)	250 V
IC 3/IC4	250 V
Pollution degree	3
Protective separation (reinforced insulation) between:	
IC2/(IC3-4)	overvoltage category III, 300 V
IC 3/IC4	overvoltage category III, 300 V
Voltage tests (routine test) acc. to IEC 61010-1:	
IC2/(IC3-4)	AC 2.2 kV
IC 3/IC4	AC 2.2 kV

Supply voltage

Supply voltage U_s	AC 100…240 V/DC 24…240 V
Tolerance of U_s	-30…+15 %
Frequency range U_s	47…63 Hz
Power consumption	≤ 3 W, ≤ 9 VA

IT system being monitored

Nominal system voltage U_n with AGH422	AC 0…1000 V/DC 0…1000 V
Tolerance of U_n	AC +10 %, DC +10 %
Nominal system voltage range U_n (UL508)	AC/DC 0…600 V
Frequency range of U_n	DC, 15…460 Hz

Measuring circuit

Permissible system leakage capacitance C_e	≤ 150 µF
Permissible extraneous DC voltage U_{fg}	≤ 1600 V

Response values

Response value R_{an1}	11…500 kΩ (50 kΩ)*
Response value R_{an2}	10…490 kΩ (25 kΩ)*
Relative uncertainty R_{an}	±15 %, at least ±3 kΩ
Hysteresis R_{an}	25 %, at least 1 kΩ
Undervoltage detection	30…1.09 kV (off)*
Overvoltage detection	31…1.10 kV (off)*
Relative uncertainty U	±5 %, at least ±5 V
Relative uncertainty depending on the frequency ≥ 200 Hz	-0.075 %/Hz
Hysteresis U	5 %, at least 5 V

Time response

Response time t_{an} at R_F = 0.5 x R_{an} and C_e=1 µF acc. to IEC 61557-8	≤ 20 s
Start-up delay t	0…10 s (0 s)*
Response delay t_{on}	0…99 s (0 s)*
Delay on release t_{off}	0…99 s (0 s)*

Displays, memory

Display	LC display, multi-functional, not illuminated
Display range measured value insulation resistance (R_F)	1 kΩ…4 MΩ
Operating uncertainty	±15 %, at least ±3 kΩ
Display range measured value nominal system voltage (U_n)	30…1.15 kV_{RMS}
Operating uncertainty	±5 %, at least ±5 V
Display range measured value system leakage capacitance for R_F > 20 kΩ	0…200 µF
Operating uncertainty	±15 %, at least ±2 µF
Password	off/0…999 (0, off)*
Fault memory alarm messages	on/(off)*

Interface (valid for isoHV425-D4-4 only)

Interface/protocol	RS-485/BMS, Modbus RTU, isoData (BMS)*
Baud rate	BMS (9.6 kbit/s), Modbus RTU (selectable), isoData (115.2 kbits/s)
Cable length (9.6 kbits/s)	≤ 1200 m
Cable: twisted pairs, shield connected to PE on one side	min. J-Y(St)Y 2x0.6
Terminating resistor	120 Ω (0.25 W), internal, can be connected
Device address, BMS bus, Modbus RTU	3…90 (3)*

Analogue output (valid for isoHV425-D4M-4 only)

Operating mode	mid-scale R or full-scale U (R = 120 kΩ)*
Functions	insulation value R_F or mains voltage U_n (R_F)*
Max. no load voltage (open terminals)	DC 12 V
Max. short-circuit current	25 mA short-circuit proof
Voltage output	DC 0…10 V, load ≥ 20 kΩ *
Current output	DC 0/4…20 mA, load ≤ 130 Ω
Current output	DC 0…400 µA, load ≤ 3 kΩ

Switching elements

Switching elements	2 x 1 N/O contact, common terminal 11
Operating principle	N/C operation/N/O operation (N/C operation)*
Electrical endurance under rated operating conditions, number of cycles	10,000

Contact data acc. to IEC 60947-5-1:

Utilisation category	AC-12	AC-14	DC-12	DC-12	DC-12
Rated operational voltage	230 V	230 V	24 V	110 V	220 V
Rated operational current	5 A	2 A	1 A	0.2 A	0.1 A
Minimum contact rating	1 mA at AC/DC ≥ 10 V				

Environment/EMC

EMC	IEC 61326-2-4, EN 50121-3-2

Ambient temperatures:

Operation	-40…+70 °C
Transport	-40…+85 °C
Storage	-40…+70 °C

Classification of climatic conditions acc. to IEC 60721 (related to temperature and relative humidity)**:**

Stationary use (IEC 60721-3-3)	3K22
for W variant	3K24
Transport (IEC 60721-3-2)	2K11
Long-term storage (IEC 60721-3-1)	1K22

Classification of mechanical conditions acc. to IEC 60721:

Stationary use (IEC 60721-3-3)	3M11
for W variant	3M12
Transport (IEC 60721-3-2)	2M4
Long-term storage (IEC 60721-3-1)	1M12

Connection

Connection type	screw-type terminal or push-wire terminal

Screw-type terminals:

Nominal current	≤10 A
Tightening torque	0.5…0.6 Nm (5…7 lb-in)
Conductor sizes	AWG 24…12
Stripping length	8 mm
Rigid/flexible	0.2…2.5 mm^2
Flexible with ferrules with/without plastic sleeve	0.25…2.5 mm^2
Multi-conductor	
rigid /flexible	0.2…1.5 mm^2
flexible with ferrules without plastic sleeve	0.25…1.5 mm^2
flexible with TWIN ferrules with plastic sleeve	0.5…1.5 mm^2

Push-wire terminals:

Nominal current	≤10 A
Conductor sizes	AWG 24…14
Stripping length	10 mm
Rigid	0.2…2.5 mm^2
Flexible without ferrules	0.75…2.5 mm^2
Flexible with ferrules with/without plastic sleeve	0.25…2.5 mm^2
Multi-conductor flexible with TWIN ferrules with plastic sleeve	0.5…1.5 mm^2
Opening force	50 N
Test opening, diameter	2.1 mm

Other

Operating mode	continuous operation
Mounting	cooling slots must be ventilated vertically
Minimum horizontal distance between the devices (DIN EN 45545)	see note **
Degree of protection, built-in components (DIN EN 60529)	IP30
Degree of protection, terminals (DIN EN 60529)	IP20
Enclosure material	polycarbonate
DIN rail mounting acc. to	IEC 60715
Screw mounting	2 x M4 with mounting clip
Documentation number	D00082
Weight	≤ 150 g

( )* = Factory setting

Insulation coordination acc. to IEC 60664-1/IEC 60664-3	
Definitions:	
Measuring circuit (IC1)	L1/+, L2/-
Control circuit (IC2)	AK1, GND, AK2, Up, E
Rated voltage	1000 V
Overvoltage category	III
Rated impulse voltage:	
IC1/IC2	8 kV
Rated insulation voltage:	
IC1/IC2	1000 V
Pollution degree	3
Protective separation (reinforced insulation) between:	
IC1/IC2	Overvoltage category III, 1000 V

IT system being monitored	
Nominal system voltage range U_n	AC 0…1000 V/DC 0…1000 V
Tolerance of U_n	AC +10 %/DC +10 %

Measuring circuit	
Measuring voltage U_m	±45 V
Measuring current I_m for R_F	≤ 120 µA
Internal resistance R_i	≥ 390 kΩ

Environment/EMC	
EMC	IEC 61326-2-4, EN 50121-3-2

Ambient temperatures:	
Operation	
U_n < 700	-40…+70 °C
U_n > 700	-40…+55 °C
Transport	-40…+85 °C
Storage	-40…+70 °C

Classification of climatic conditions acc. to IEC 60721 (related to temperature and relative humidity)**:**	
Stationary use (IEC 60721-3-3)	3K22
for W variant	3K24
Transport (IEC 60721-3-2)	2K11
Long-term storage (IEC 60721-3-1)	1K22

Classification of mechanical conditions acc. to IEC 60721:	
Stationary use (IEC 60721-3-3)	3M11
for W variant	3M12
Transport (IEC 60721-3-2)	2M4
Long-term storage (IEC 60721-3-1)	1M12

Connection	
Connection type	screw-type terminal or push-wire terminal
Screw-type terminals:	
Nominal current	≤10 A
Tightening torque	0.5…0.6 Nm (5…7 lb-in)
Conductor sizes	AWG 24…12
Stripping length	8 mm
Rigid/flexible	0.2…2.5 mm²
Flexible with ferrules with/without plastic sleeve	0.25…2.5 mm²
Multi-conductor	
rigid /flexible	0.2…1.5 mm²
flexible with ferrules without plastic sleeve	0.25…1.5 mm²
flexible with TWIN ferrules with plastic sleeve	0.5…1.5 mm²
Push-wire terminals:	
Nominal current	≤10 A
Conductor sizes	AWG 24…14
Stripping length	10 mm
Rigid	0.2…2.5 mm²
Flexible without ferrules	0.75…2.5 mm²
Flexible with ferrules with/without plastic sleeve	0.25…2.5 mm²
Multi-conductor flexible with TWIN ferrules with plastic sleeve	0.5…1.5 mm²
Opening force	50 N
Test opening, diameter	2.1 mm

Single cables for terminals Up, AK1, GND, AK2 – Requirement for connecting cables between isoHV425xx and AGH422	
Cable length	≤ 0.5 m
Wire cross-section	≥ 0.75 mm²

Other	
Operating mode	continuous operation
Mounting	cooling slots must be ventilated vertically
Distance to adjacent devices from U_n > 800 V	≥ 30 mm
Minimum horizontal distance between the devices (DIN EN 45545)	see note *
Degree of protection, built-in components (DIN EN 60529)	IP30
Degree of protection, terminals (DIN EN 60529)	IP20
Enclosure material	polycarbonate
DIN rail mounting acc. to	IEC 60715
Screw mounting	2 x M4 with mounting clip
Weight	150 g

** *Application in rail vehicles / DIN EN 45545-2:2016!*
If the distance to neighbouring components that do not meet the requirements of the DIN EN 45545-2 Table 2 standard is < 20 mm horizontally or < 200 mm vertically, these are to be regarded as grouped. See DIN EN 45545-2 Chapter 4.3 Grouping rules.

Dimension diagram (dimensions in mm)

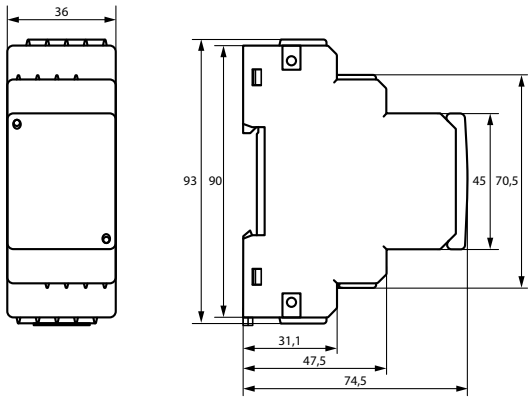

isoHV425-D4-4

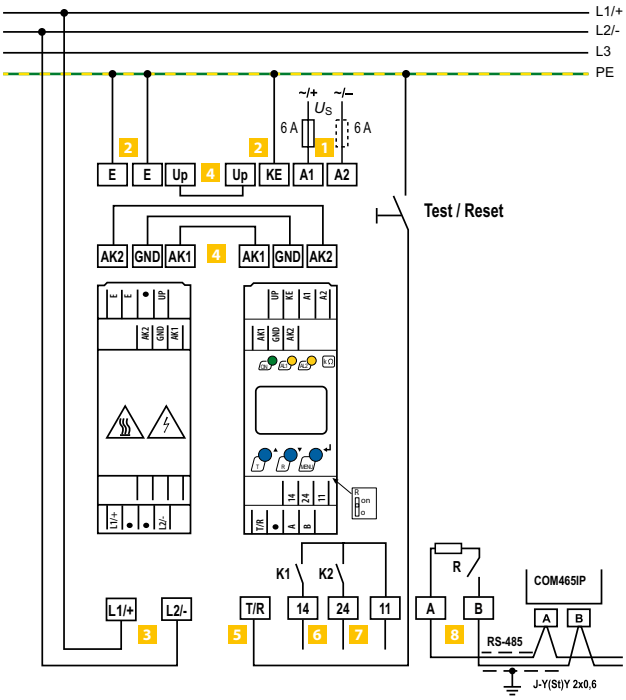

isoHV425-D4M-4

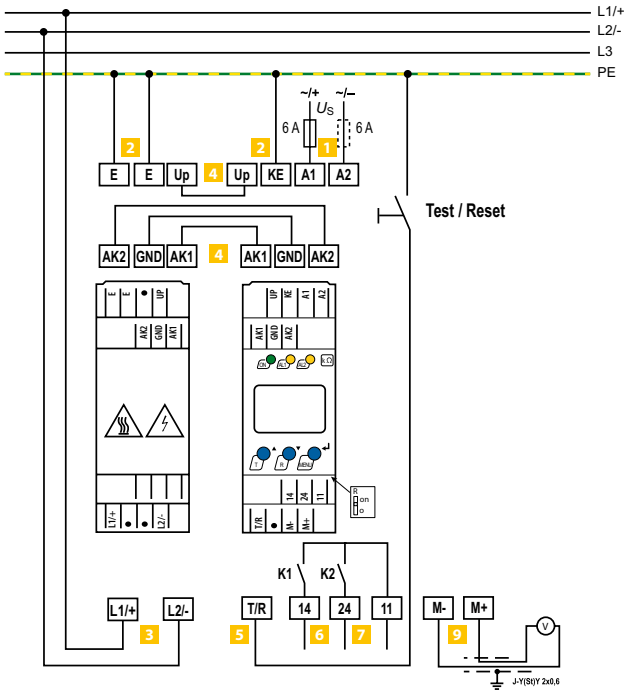

1	**A1, A2**	Connection to the supply voltage via fuse (line protection). If being supplied from an IT system, both lines have to be protected by a fuse.
2	**E, KE**	Connect each terminal separately to PE: The same wire cross section as for A1, A2 is to be used
3	**L1/+, L2/–**	Connection to the IT system to be monitored
4	**Up, AK1, GND, AK2**	Connect the terminals of the AGH422 to the corresponding terminals of the ISOMETER®.
5	**T/R**	Connection for the external combined test/reset button
6	**11, 14**	Connection to alarm relay K1
7	**11, 24**	Connection to alarm relay K2
8	**A, B**	RS-485 communication interface with connectable terminating resistor.
9	**M+, M-**	Analogue output

ISOMETER® IR155-3203/IR155-3204

Insulation monitoring device for unearthed DC drive systems (IT systems) in electric vehicles

AC/DC

Typical applications

- Monitoring for unearthed DC drive systems (IT systems) in electric vehicles

Approvals

Device features

- Suitable for 12 V and 24 V systems
- Automatic device self test
- Continuous measurement of the insulation resistance 0…10 MΩ
  - Response time for the first measurement of the system state (SST) is < 2 s after switching the supply voltage on
  - Response time < 20 s for insulation resistance measurement (DCP)
- Automatic adaptation to the existing system leakage capacitance (≤ 1 µF)
- Detection of earth faults and interruption of the earth connection
- Insulation monitoring of AC and DC insulation faults for unearthed systems (IT systems) 0…1000 V
- Undervoltage detection for voltages below 500 V (adjustable at factory by Bender)
- Short circuit proof outputs for:
  - Fault detection (high-side output)
  - Measured value (PWM 5…95 %) and status (f = 10…50 Hz) at high or inverted low-side driver (M_{HS}/M_{LS} output)
- Protective coating (SL 1301ECO-FLZ)

Standards

IEC 61557-8
IEC 61010-1
IEC 60664-1
ISO 6469-3
ISO 23273-3
ISO 16750-1
ISO 16750-2
ISO 16750-4
E1 (ECE regulation No. 10 version 5)
acc. 72/245/EWG/EEC
DIN EN 60068-2-38
DIN EN 60068-2-30
DIN EN 60068-2-14
DIN EN 60068-2-64
DIN EN 60068-2-27

Normative exclusion

The device went through an automotive test procedure in combination with multi customer requirements reg. ISO16750-x.

The standard IEC61557-8 will be fulfilled by creating the function for LED warning and test button at the customer site if necessary.

The device includes no surge and load dump protection above 50 V. An additional central protection is necessary.

Further information

For further information refer to our product range on www.bender.de.

Ordering information

Type	Parameters	Response value R_{an}	F_{ave}	Undervoltage detection	Measured value output	Art. No.
IR155-3203	Continuously set value	100 kΩ	10	300 V	Low-side	B91068138V4
IR155-3204				0 V (inactive)	High-side	B91068139V4
IR155-3203	Customer-specific setting	100 kΩ…1 MΩ	1…10	0…500 V	Low-side	B91068138CV4
IR155-3204					High-side	B91068139CV4

Accessories

Description	Art. No.
Fastening set	B91068500
Connector set IR155-32xx	B91068501

Insulation coordination acc. to IEC 60664-1

Protective separation (reinforced insulation)	between (L+/L-) – (Kl. 31, Kl. 15, E, KE, M_{HS}, M_{LS}, OK_{HS})
Voltage test	AC 3500 V/1 min

Supply/IT system being monitored

Supply voltage U_s	DC 10…36 V
Max. operating current I_S	150 mA
Max. current I_k	2 A 6 A/2 ms inrush current
HV voltage range (L+/L-) U_n	AC 0…1000 V (peak value) 0…660 V r.m.s. (10 Hz…1 kHz) DC 0…1000 V
Power consumption	< 2 W

Response values

Response value hysteresis (DCP)	25 %
Response value R_{an}	100 kΩ…1 MΩ
Undervoltage detection	0…500 V

Measuring range

Measuring range	0…10 MΩ
Undervoltage detection	0…500 V default setting: 0 V (inactive)
Relative uncertainty SST (≤ 2 s)	good > 2* R_{an}; bad < 0.5* R_{an}
Relative uncertainty DCP (default setting 100 kΩ)	0…85 kΩ ▸ ±20 kΩ 100 kΩ…10 MΩ ▸ ±15%
Relative uncertainty output M (fundamental frequency)	±5 % at each frequency (10 Hz; 20 Hz; 30 Hz; 40 Hz; 50 Hz)
Relative uncertainty undervoltage detection	U_n ≥ 100 V ▸ ±10 %; at U_n ≥300 V ▸ ±5 %
Relative uncertainty (SST)	"Good condition" ≥ 2* R_{an} "Bad condition" ≤ 0.5* R_{an}

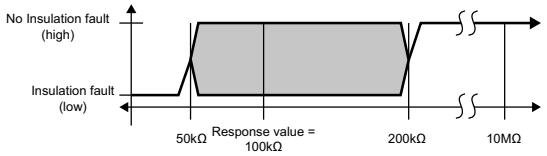

Relative uncertainty DCP	100 kΩ…10 MΩ ±15 % 100 kΩ…1.2 MΩ ▸ ±15 % to ±7 % 1.2 MΩ ▸ ±7 % 1.2…10 MΩ ▸ ±7 % to ±15 % 10 MΩ ▸ ±15 %

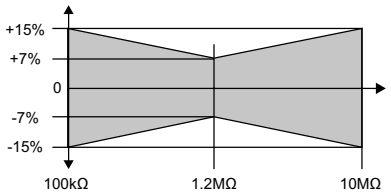

Absolute uncertainty	0…85 kΩ ▸ ±20 kΩ

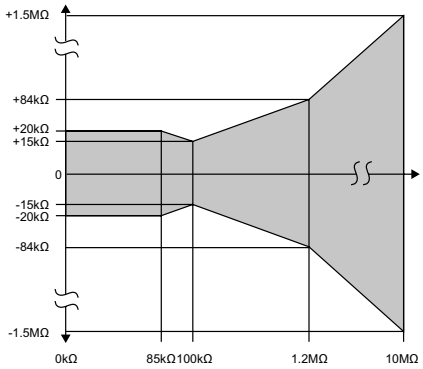

Time response

Response time t_{an} (OK_{HS}; SST)	t_{an} ≤ 2 s (typ. < 1 s at U_n > 100 V)
Response time t_{an} (OK_{HS}; DCP) (when changing over from R_F = 10 MΩ to $R_{an}/2$; at C_e = 1 µF; U_n = DC 1000 V)	t_{an} ≤ 20 s (at F_{ave} = 10*) t_{an} ≤ 17.5 s (at F_{ave} = 9) t_{an} ≤ 17.5 s (at F_{ave} = 8) t_{an} ≤ 15 s (at F_{ave} = 7) t_{an} ≤ 12.5 s (at F_{ave} = 6) t_{an} ≤ 12.5 s (at F_{ave} = 5) t_{an} ≤ 10 s (at F_{ave} = 4) t_{an} ≤ 7.5 s (at F_{ave} = 3) t_{an} ≤ 7.5 s (at F_{ave} = 2) t_{an} ≤ 5 s (at F_{ave} = 1) during the self test t_{an} +10 s
Switch-off time t_{ab} (OK_{HS}; DCP) (when changing over from $R_{an/2}$ = 10 MΩ to R_F; at C_e = 1 µF; U_n = DC 1000 V	t_{ab} ≤ 40 s (at F_{ave} = 10) t_{ab} ≤ 40 s (at F_{ave} = 9) t_{ab} ≤ 33 s (at F_{ave} = 8) t_{ab} ≤ 33 s (at F_{ave} = 7) t_{ab} ≤ 33 s (at F_{ave} = 6) t_{ab} ≤ 26 s (at F_{ave} = 5) t_{ab} ≤ 26 s (at F_{ave} = 4) t_{ab} ≤ 26 s (at F_{ave} = 3) t_{ab} ≤ 20 s (at F_{ave} = 2) t_{ab} ≤ 20 s (at F_{ave} = 1) during a self test t_{ab} +10 s
Duration of the self test	10 s (every five minutes; should be added to t_{an}/t_{ab})

Measuring circuit

System leakage capacitance C_e	≤ 1 µF
Smaller measurement range and increased measuring time at C_e	> 1 µF (e.g. max. range 1 MΩ @ 3 µF, t_{an} = 68 s when changing over from R_F 1 MΩ to $R_{an}/2$)
Measuring voltage U_M	±40 V
Measuring current I_M at R_F = 0	±33 µA
Impedance Z_i at 50 Hz	≥ 1.2 MΩ
Internal DC resistance R_i	≥ 1.2 MΩ

Output

Measurement output (M)

***M_{HS}* switches to *U_s* – 2 V (3204)**
(external pull-down resistor to Kl. 31 necessary 2.2 kΩ)

***M_{LS}* switches to Kl. 31 +2 V (3203)**
(external pull-up resistor to Kl. 15 reqired 2.2 kΩ

0 Hz ▸ Hi > short circuit to
U_b +(Kl. 15); Low > IMD off or short circuit to Kl. 31

10 Hz ▸ Normal condition
Insulation measurement DCP;
starts two seconds after power on;
First successful insulation measurement at ≤ 17.5 s
PWM active 5…95 %

20 Hz ▸ undervoltage condition
Insulation measurement DCP (continuous measurement);
starts two seconds after power on;
PWM active 5…95 %
First successful insulation measurement at ≤ 17.5 s
Undervoltage detection 0…500 V
(Bender configurable)

30 Hz ▸ Speed start measurement
Insulation measurement (only good/bad evaluation)
starts directly after power on ≤ 2 s;
PWM 5…10 % (good) and 90…95 % (bad)

40 Hz ▸ Device error
Device error detected; PWM 47.5…52.5 %

50 Hz ▸ Connection fault earth
Fault detected on the earth connection (Kl. 31)
PWM 47.5…52.5 %

* F_{ave} = 10 is recommended for electric and hybrid vehicles

Status output (OK_{HS})

OK_{HS} switches to U_s – 2 V
(external pull-down resistor to Kl. 31 required 2.2 kΩ)

High ▸ No fault; R_F > response value
Low ▸ Insulation resistance ≤ response value detected;
Device error; Fault in the earth connection
Undervoltage detected or device switched off

Operating principle PWM driver

- Condition "Normal" and "Undervoltage detected" (10 Hz; 20 Hz)

Duty cycle 5 % = > 50 MΩ (∞)
Duty cycle 50 % = 1200 kΩ
Duty cycle 95 % = 0 kΩ

$$R_F = \frac{90\ \%\ \text{x}\ 1200\ \text{k}\Omega}{dc_{meas}\ \text{-}5\%}\ \text{-}1200\ \text{k}\Omega$$

dc_{meas} = measured duty cycle (5 %…95 %)

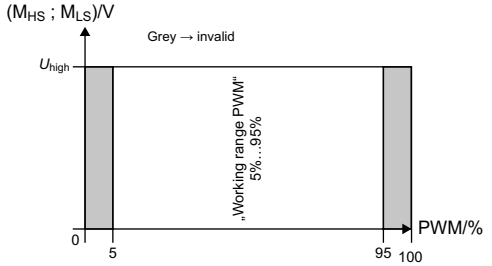

Operating principle PWM driver

- Condition "SST" (30 Hz)

Duty cycle ▸ 5…10 % ("good")
90…95 % ("bad")

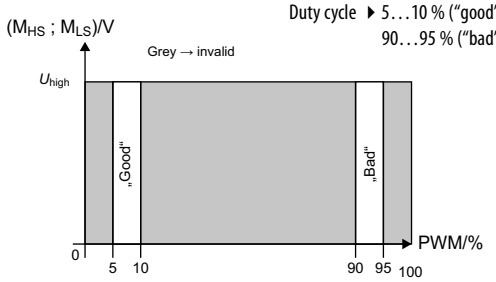

Operating principle PWM driver

- Condition "Device error" and "Kl.31 fault" (40 Hz; 50 Hz;)

Duty cycle ▸ 47.5…52.5 %

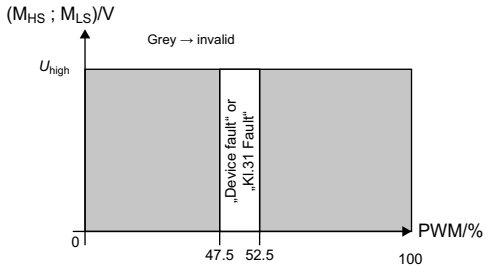

Load current I_L	80 mA
Turn-on time ▸ to 90 % V_{out}	max. 125 µs
Turn-off time ▸ to 10 % V_{out}	max. 175 µs
Slew rate on ▸ 10…30 % V_{out}	max. 6 V/µs
Slew rate off ▸ 70…40 % V_{out}	max. 8 V/µs

Timing 3204 (inverse to 3203)

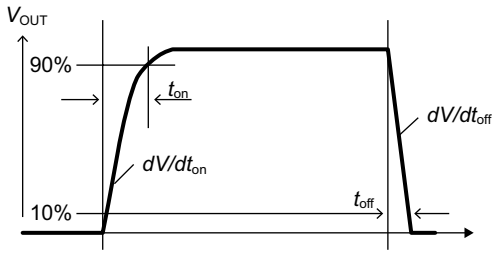

EMC

Load dump protection	< 50 V
Measurement method	Bender-DCP technology
Factor averaging	
F_{ave} (output M)	1…10 (factory set: 10)

ESD protection

Contact discharge – directly to terminals	≤ 10 kV
Contact discharge – indirectly to environment	≤ 25 kV
Air discharge – handling of the PCB	≤ 6 kV

Connection

On-board connectors	TYCO-MICRO MATE-N-LOK 1 x 2-1445088-8 Kl. 31, Kl.15, E, KE, M_{HS}, M_{LS}, OK_{HS}
2 x 2-1445088-2 (L+, L-); The connection between the respective connecting pins at L+or L-may only be used as redundancy. Cannot be used for looping through!	
Crimp contacts	TYCO-MICRO MATE-N-LOK Gold 14 x 1-794606-1 Conductor cross section: AWG 20…24
Enclosure for crimp contacts	TYCO-MICRO MATE-N-LOK receptor HSG single R -1445022-8 TYCO-MICRO MATE-N-LOK receptor HSG single R -1445022-2

General data

Necessary crimp tongs (TYCO)	91501-1
Operating mode/mounting	continuous operation/any position
Temperature range	-40…+105 °C
Voltage failure	≤ 2 ms
Flammability class acc. to	UL 94 V-0

Mounting

M4 metal screws with locking washers between screw head and PCB. Torx, T20 with a maximum tightening torque of 4 Nm for the screws. Furthermore, a maximum of 10 Nm tightening torque to the PCB at the mounting points.

Mounting and connector kits are not included in delivery, but are available as accessories. The maximum diameter of the mounting points is 10 mm.

Before mounting the device, ensure sufficient insulation between the device and the vehicle or the mounting points (min. 11.4 mm to other parts). If the device is mounted on a metal or conductive sub-surface, this subsurface has to be at earth potential (Kl.31; vehicle mass).

Deflection	max. 1 % of the length or width of the PCB
Coating	thick-film lacquer
Documentation number	D00115
Weight	52 g ±2 g

Dimension diagrams (dimensions in mm)

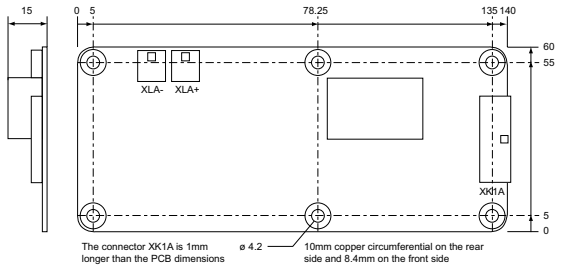

Wiring diagram

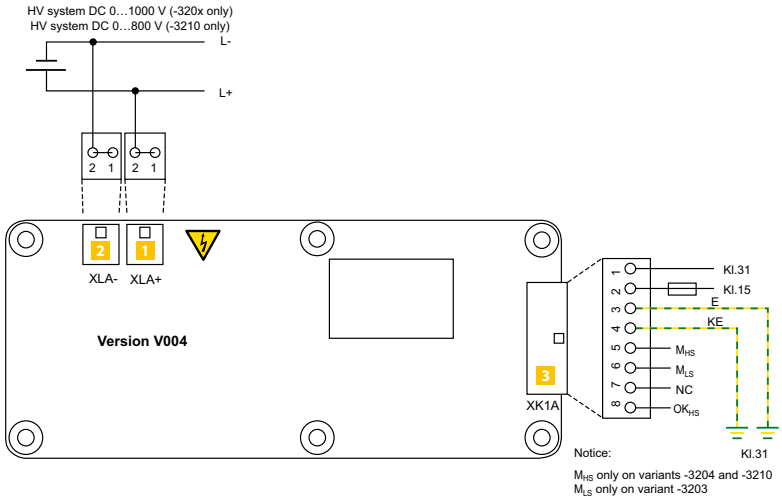

1 Connectors XLA+

Pin 1+2	L+	Line voltage

2 Connectors XLA-

Pin 1+2	L-	Line voltage

3 Connectors XK1A

Pin 1	Kl. 31	Chassis ground/electronic ground
Pin 2	Kl. 15	Supply voltage
Pin 3	Kl. 31	Chassis ground
Pin 4	Kl. 31	Chassis ground (separate line)
Pin 5	M_{HS}	Data Out, PWM (high side)
Pin 6	M_{LS}	Data Out, PWM (low side)
Pin 7	n.c.	
Pin 8	OK_{HS}	Status Output (high side)

Example of application

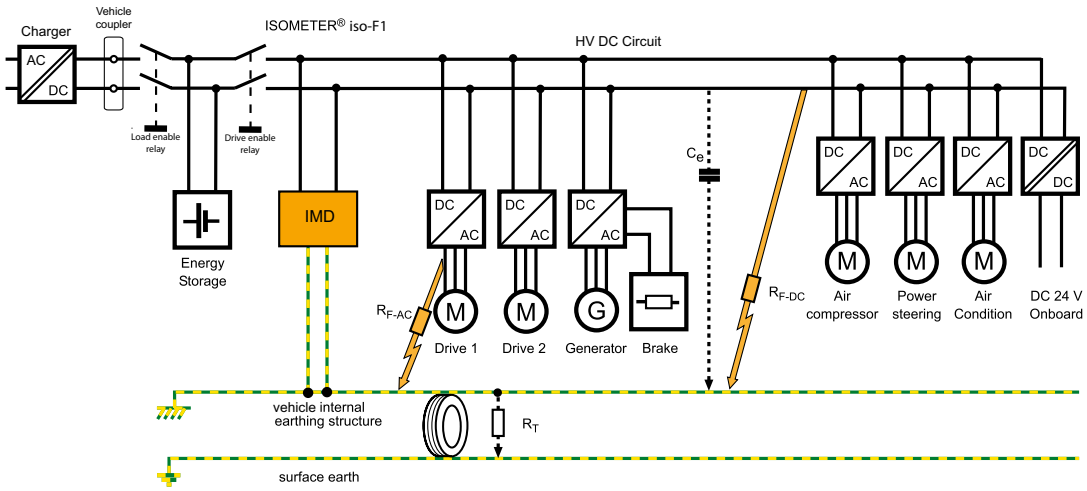

ISOMETER® isoEV425 with coupling device AGH420

Insulation monitoring device for unearthed DC circuits (IT systems) for charging electric vehicles

AC/DC

Typical applications

- DC charging stations for electric vehicles according to IEC 61851-23

Approvals

Device features

- Monitoring for DC charging stations (mode 4 according to IEC 61851-23) for charging electric vehicles
- Mains voltage measurement (r.m.s.) with under-/overvoltage detection
- DC voltage measurement to earth (L+/PE and L-/PE)
- Automatic adaptation to the system leakage capacitance up to 5 µF
- Automatic device self-test with connection monitoring
- Selectable start-up delay, response delay and delay on release
- Two separately adjustable response value ranges of 1…500kΩ (Alarm 1, Alarm 2)
- Alarm signalling via LEDs (AL1, AL2), a display and alarm relays (K1, K2)
- N/C operation or N/O operation selectable
- Measured value indication via multi-functional LCD
- Fault memory can be activated
- RS-485 (galvanically isolated) including the following protocols:
  - BMS interface (Bender measuring device interface) for data exchange with other Bender components
  - Modbus RTU
  - IsoData (for continuous data output)
- Password protection to prevent unauthorised parameter changes

Standards

The ISOMETER® has been developed in compliance with the following standards:

- DIN EN 61557-8 (VDE 0413-8)
- IEC 61557-8

Further information

For further information refer to our product range on www.bender.de.

Ordering information

Type	Supply voltage U_s	System leakage capacitance C_e	Art. No.	
			Screw-type terminal	Push-wire terminal
isoEV425-D4-4 with AGH420	AC 100…240 V, 47…63 Hz DC 24…240 V	≤ 5 µF	B91036401	B71036401
isoEV425HC-D4-4 with AGH420		≤ 20 µF	–	B71036397

Accessories

Description	Art. No.
Mounting clip for screw mounting (1 piece per device)	B98060008

Insulation coordination acc. to IEC 60664-1/IEC 60664-3

Definitions:	
Supply circuit (IC2)	A1, A2
Output circuit (IC3)	11, 14, 24
Control circuit (IC4)	Up, KE, T/R, A, B, AK1, GND, AK2
Rated voltage	240 V
Overvoltage category	III
Rated impulse voltage:	
IC2/(IC3-4)	4 kV
IC 3/(IC4)	4 kV
Rated insulated voltage:	
IC2/(IC3-4)	250 V
IC 3/(IC4)	250 V
Polution degree	3
Protective separation (reinforced insulation) between:	
IC2/(IC3-4)	Overvoltage category III, 300 V
IC 3/(IC4)	Overvoltage category III, 300 V
Voltage test (routine test) according to IEC 61010-1:	
IC2/(IC3-4)	AC 2.2 kV
IC 3/(IC4)	AC 2.2 kV

Supply voltage

Supply voltage U_s	AC 100…240 V/DC 24…240 V
Tolerance of U_s	-30…+15 %
Frequency range U_s	47…63 Hz
Power consumption	≤ 3 W, ≤ 9 VA

IT system being monitored

Nominal system voltage U_n with AGH420	3(N)AC, AC 0…690 V/DC 0…1000 V
Tolerance of U_n	AC + 15 %, DC +10 %
Nominal system voltage range U_n with AGH420 (UL508)	AC/DC 0…600 V
Frequency range of U_n	DC, 40…460 Hz

Measuring circuit

Permissible system leakage capacitance C_e	
isoEV425	≤ 5 µF
isoEV425HC	≤ 20 µF
Permissible extraneous DC voltage U_{fg}	≤ 1150 V

Response values

Response value R_{an1}	
isoEV425	2…500 kΩ (500 kΩ)*
isoEV425HC	2…500 kΩ (200 kΩ)*
Response value R_{an2}	1…490 kΩ (100 kΩ)*
Operating uncertainty R_{an} (≤ 5 µF)	± 15 %, at least ±1 kΩ
Operating uncertainty R_{an} >100 kΩ (≤ 5 µF, isoEV425HC)	± (5 % * R_{an}/100 kΩ +10%)
Hysteresis R_{an}	25 %, at least 1 kΩ
Undervoltage detection	30…1.14 kV (off)*
Overvoltage detection	31…1.15 kV (off)*
Relative uncertainty U	± 5 %, at least ± 5 V
Relative uncertainty depending on the frequency ≥ 200 Hz	-0.03 %/Hz
Hysteresis U	5 %, at least 5 V

Time response

Response time t_{an} at R_F = 0.5 x R_{an} and C_e=1 µF acc. to IEC 61557-8	≤ 10 s
Start-up delay t	0…10 s (0 s)*
Response delay t_{on}	0…99 s (0 s)*
Delay on release t_{off}	0…99 s (0 s)*

Displays, memory

Display	LC display, multi-functional, not illuminated
Display range measured value insulation resistance (R_F)	1 kΩ…1 MΩ
Operating uncertainty R_F (≤ 5 µF)	± 15 %, at least ±1 kΩ
Operating uncertainty R_F >100 kΩ (≤ 5 µF, isoEV425HC)	± (5 % * R_F /100 kΩ +10%)
Display range measured value nominal system voltage (U_n)	30…1.15 kV r.m.s.
Operating uncertainty	± 5 %, at least ± 5 V
Relative uncertainty depending on the frequency ≥ 200 Hz	-0.03 %/Hz
Display range measured value system leakage capacitance R_F > 10 kΩ	
isoEV425	0…10 µF
isoEV425HC	0…25 µF
Operating uncertainty	± 15 %, at least ± 2 µF
Password	off/0…999 (0, off)*
Fault memory alarm messages	on/(off)*

Interface

Interface/protocol	RS-485/BMS, Modbus RTU, isoData
Baud rate	BMS (9.6 kBit/s), Modbus RTU (selectable), isoData (115.2 kBits/s)
Cable length (9.6 kbits/s)	≤ 1200 m
Cable	shielded, one end of shield connected to PE
recommended	CAT6/CAT7 min. AWG23
alternatively	twisted pair, J-Y(St)Y min. 2x0.8
Terminating resistor	120 Ω (0,25 W), internal, can be connected
Device address, BMS bus, Modbus RTU	3…90 (3)*

Switching elements

Switching elements	2 x 1 N/O contacts, common terminal 11
Operating principle	N/C operation/N/O operation (N/O operation)*
Electrical endurance, number of cycles	10000

Contact data acc. to IEC 60947-5-1:

Utilisation category	AC-12	AC-14	DC-12	DC-12	DC-12
Rated operational voltage	230 V	230 V	24 V	110 V	220 V
Rated operational current	5 A	2 A	1 A	0.2 A	0.1 A
Minimum contact load relay manufacturer's reference					10 µA / 10 mV DC

Environment/EMC

EMC	IEC 61326-2-4

Ambient temperatures:

Operation	-40…+70 °C
Transport	-40…+85 °C
Storage	-40…+70 °C

Classification of climatic conditions acc. to IEC 60721 (related to temperature and relative humidity)**:**

Stationary use (IEC 60721-3-3)	3K22
Transport (IEC 60721-3-2)	2K11
Long-term storage (IEC 60721-3-1)	1K22

Classification of mechanical conditions acc. to IEC 60721

Stationary use (IEC 60721-3-3)	3M11
Transport (IEC 60721-3-2)	2M4
Long-term storage (IEC 60721-3-1)	1M12

Connection

Connection type	screw-type terminal or push-wire terminal

Screw-type terminals:

Nominal current	≤10 A
Tightening torque	0.5…0.6 Nm (5…7 lb-in)
Conductor sizes	AWG 24-12
Stripping length	8 mm
Rigid/flexible	0.2…2.5 mm²
Flexible with ferrules with/without plastic sleeve	0.25…2.5 mm²
Multi-conductor	
rigid/flexible	0.2…1.5 mm²
flexible with ferrules without plastic sleeve	0.25…1.5 mm²
flexible with TWIN ferrules with plastic sleeve	0.5…1.5 mm²

Push-wire terminals:

Nominal current	≤10 A
Conductor sizes	AWG 24-14
Stripping length	10 mm
Rigid	0.2…2.5 mm²
Flexible without ferrules	0.75…2.5 mm²
Flexible with ferrules with/without plastic sleeve	0.25…2.5 mm²
Multi-conductor flexible with TWIN ferrules with plastic sleeve	0.5…1.5 mm²
Opening force	50 N
Test opening, diameter	2.1 mm
Wiring of the terminals Up, AK1, GND, AK2	refer to technical data AGH420 under the heading "Connection"

Other

Operating mode	continuous operation
Mounting	cooling slots must be ventilated vertically
Degree of protection, built-in components (DIN EN 60529)	IP30
Degree of protection, terminals (DIN EN 60529)	IP20
Enclosure material	polycarbonate
DIN rail mounting acc. to	IEC 60715
Screw fixing	2 x M4 with mounting clip
Documentation number	D00126
Weight	≤ 150 g

( )* = factory setting

Insulation coordination acc. to IEC 60664-1/IEC 60664-3

Definitions:	
Measuring circuit (IC1)	L1/+, L2/-
Control circuit (IC2)	AK1, GND, AK2, Up, E
Rated voltage	1000 V
Overvoltage category	III
Rated impulse voltage:	
IC1/(IC2)	8 kV
Rated insulated voltage:	
IC1/(IC2)	1000 V
Polution degree	3
Protective separation (reinforced insulation) between:	
IC1/(IC2)	Overvoltage category III, 1000 V

Monitored IT system

Nominal system voltage range U_n	AC/DC 0…1000 V
Tolerance of U_n	AC/DC +10 %
Nominal system voltage range U_n (UL508)	AC/DC 0…600 V

Measuring circuit

Measuring voltage U_m	± 45 V
Measuring current I_m at R_F	≤ 400 µA
Internal resistance DC R_i	≥ 120 kΩ

Environment/EMC

EMC	IEC 61326-2-4

Ambient temperatures:

Operation	-40…+70 °C
Transport	-40…+85 °C
Storage	-40…+70 °C

Classification of climatic conditions acc. to IEC 60721 (related to temperature and relative humidity)**:**

Stationary use (IEC 60721-3-3)	3K22
Transport (IEC 60721-3-2)	2K11
Long-term storage (IEC 60721-3-1)	1K22

Classification of mechanical conditions acc. to IEC 60721:

Stationary use (IEC 60721-3-3)	3M11
Transport (IEC 60721-3-2)	2M4
Long-term storage (IEC 60721-3-1)	1M12

Connection

Connection type screw-type terminal or push-wire terminal

Screw-type terminals:

Nominal current	≤10 A
Tightening torque	0.5…0.6 Nm (5…7 lb-in)
Conductor sizes	AWG 24-12
Stripping length	8 mm
Rigid/flexible	0.2…2.5 mm²
Flexible with ferrules with/without plastic sleeve	0.25…2.5 mm²
Multi-conductor	
rigid/flexible	0.2…1.5 mm²
flexible with ferrules without plastic sleeve	0.25…1.5 mm²
flexible with TWIN ferrule with plastic sleeve	0.25…1.5 mm²

Push-wire terminals:

Nominal current	≤10 A
Conductor sizes	AWG 24-14
Stripping length	10 mm
Rigid	0.2…2.5 mm²
Flexible without ferrules	0.75…2.5 mm²
Flexible with ferrules with plastic sleeve	0.25…2.5 mm²
Multi-conductor flexible with TWIN ferrules with plastic sleeve	0.5…1.5 mm²
Opening force	50 N
Test opening, diameter	2.1 mm
Connection type	terminals Up, AK1, GND, AK2

Single cables for terminals Up, AK1, GND, AK2:

Cable lengths	≤ 0.5 m
Connection properties	≥ 0.75 mm²

Other

Operating mode	Continuous operation
Mounting	cooling slots must be ventilated vertically
Distance to adjacent devices from U_n > 800 V	≥ 30 mm
Degree of protection internal components (DIN EN 60529)	IP30
Degree of protection terminals (DIN EN 60529)	IP20
Enclosure material	polycarbonate
DIN rail mounting acc. to	IEC 60715
Screw mounting	2 x M4 with mounting clip
Weight	≤ 150 g

Dimension diagram (dimensions in mm)

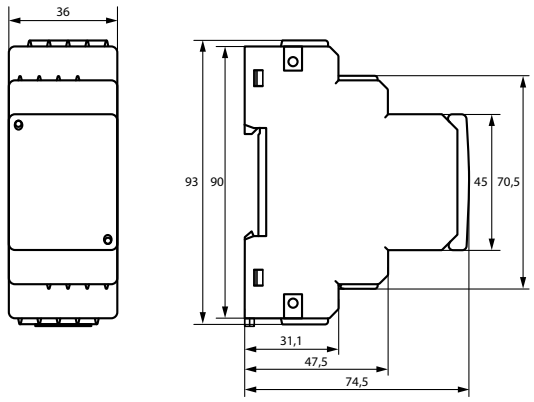

Wiring diagram

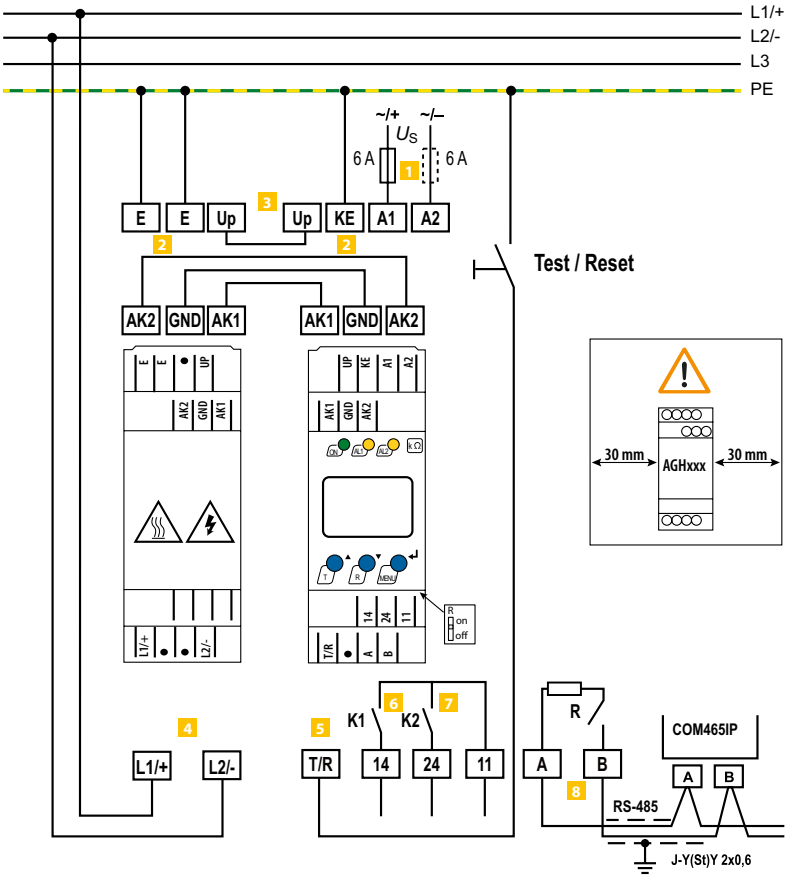

1	**A1, A2**	Connection to the supply voltage via a fuse. If supplied from an IT system, both lines have to be protected by a fuse.*
2	**E, KE**	Connect each terminal separately to PE: The same wire cross section as for A1, A2 is to be used.
3	**L1/+, L2/–**	Connection to the 3(N)AC, AC or DC system to be monitored.
4	**Up, AK1, GND, AK2**	Connect the terminals of the AGH420 to the correspon-ding terminals of the ISOMETER®.
5	**T/R**	Connection for external combined test and reset button.
6	**11, 14**	Connection to alarm relay K1
7	**11, 24**	Connection to alarm relay K2
8	**A, B**	RS-485 communication interface with selectable terminating resistance.

* **For UL applications:**
Only use 60/75°C copper lines!
UL and CSA applications require the supply voltage to be protected via 5 A fuses.

Example of application

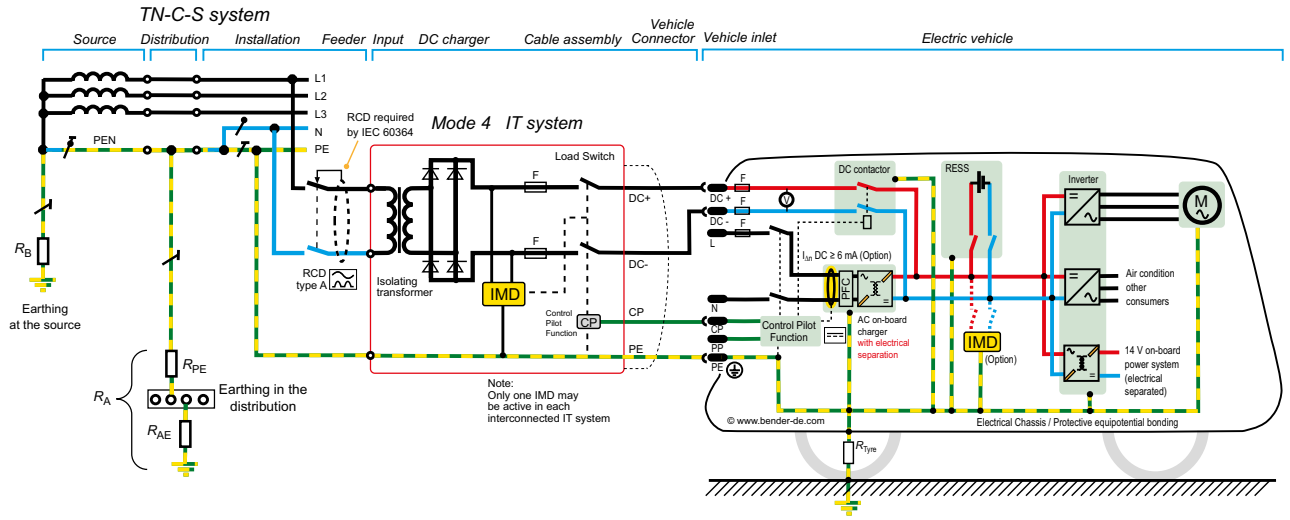

ISOMETER® isoCHA425

Insulation monitoring device for unearthed DC systems (IT systems) DC 0 V to 400 V.
Suitable for DC charging stations according to CCS or CHAdeMO

DC

Typical applications

- DC charging stations for electric vehicles according to CSS or CHAdeMO

Approvals

Device features

- Monitoring of the insulation resistance R_F of DC charging stations in accordance with the CHAdeMO standard or Combined Charging System (CCS).
- CHAdeMO (Mode CHd):
  - Maximum system leakage capacitance 1.6 µF per conductor
  - Detection of insulation faults in the system voltage range from 50 V to 400 V
  - Response for time one-pole insulation faults R_{FU}:
    - $R_{FU} \leq 100$ kΩ: max. 1 s
    - 100 kΩ < $R_{FU} \leq 2$ MΩ: max. 10 s
  - Response time for two-pole insulation faults R_{FS}: max. 10 s
- CCS (Mode dc):
  - Detection of insulation faults up to 2 MΩ
  - Maximum system leakage capacitance C_e: 5 µF
  - Response time t_{an} at $C_e \leq 5$ µF or $R_F \leq 100$ kΩ: max. 10 s
- Measuring the system leakage capacitance C_e
- Measuring the nominal system voltage U_n (true RMS) with undervoltage/overvoltage detection
- Measuring the residual voltages U_{L1e} (between L+ and earth) and U_{L2e} (between L– and earth)
- Selectable start-up delay, response delay and delay on release
- Two separately adjustable response value ranges from 5…250 kΩ (prewarning, alarm)
- Alarm output via LEDs ('AL1', 'AL2'), display, and alarm relays ('K1', 'K2')
- Automatic device self test with connection monitoring
- Selectable N/C or N/O relay operation
- Measured value indication via multi-functional LC display
- Activatable fault memory
- RS-485 (galvanically isolated) including the following protocols:
  - BMS (Bender measuring device interface) for the data exchange with other Bender devices
  - Modbus RTU
  - IsoData (for continuous data output)
- Password protection against unauthorised changing of parameters
- Stop mode to disable the measuring pulse generator

Standards

The ISOMETER® was developed in compliance with the standards specified in the Declaration of Conformity.

EU Declaration of Conformity

Hereby, Bender GmbH & Co. KG declares that the device covered by the Radio Directive complies with Directive 2014/53/EU. The full text of the EU Declaration of Conformity is available at the following Internet address:

https://www.bender.de/fileadmin/content/Products/CE/CEKO_isoXX425.pdf

UKCA Declaration of Conformity

Hereby, Bender GmbH & Co. KG declares that this device is in compliance with Radio Equipment Regulations 2017 (S.I. 2017/1206). The full text of the UK declaration of conformity is available at the following internet address:

https://www.bender.de/fileadmin/content/Products/UKCA/UKCA_isoXX425.pdf

Further information

For further information refer to our product range on www.bender.de.

Ordering information

Type	Nominal voltage U_n	Art. No	
		Screw terminal	Push-wire terminal
isoCHA425-D4-4	CCS: DC 0…400 V CHAdeMO: DC 50…400 V	B91036395	B71036395

Accessories

Description	Art. No.
Mounting clip for screw mounting (1 piece per device)	B98060008

Insulation coordination acc. to IEC 60664-1/-3

Definitions	
Measuring circuit (IC1)	L+, L
Supply circuit (IC2)	A1, A2
Output circuit (IC3)	11, 14, 24
Control circuit (IC4)	E, KE, T/R, A, B
Rated impulse voltage	
IC1/(IC2-4)	6 kV
IC2/(IC3-4)	4 kV
IC3/IC4	4 kV
Rated insulation voltage	
IC1/(IC2-4)	400 V
IC2/(IC3-4)	250 V
IC3/IC4	250 V
Pollution degree	3
Protective separation (reinforced insulation) between	
IC1/(IC2-4)	Overvoltage category III, 600 V
IC2/(IC3-4)	Overvoltage category III, 300 V
IC3/IC4	Overvoltage category III, 300 V
Voltage test (routine test) according to IEC 61010-1	
IC2/(IC3-4)	AC 2.2 kV
IC3/IC4	AC 2.2 kV

Supply voltage

Supply voltage U_s	AC 100…240 V / DC 24…240 V
Tolerance of U_s	–30…+15 %
Frequency range U_s	47…63 Hz
Power consumption	≤ 3 W, ≤ 9 VA

IT system being monitored

Nominal system voltage U_n	DC 0…400 V
Tolerance of U_n	+25 %

Response values

Response value R_{an1}	R_{an2}…250 kΩ (230 kΩ)*
Response value R_{an2}	5 kΩ…R_{an1} (48 kΩ)*
Hysteresis R_{an}	25 %, > 1 kΩ
Undervoltage detection U	< 10…499 V (off)*
Overvoltage detection U	> 11…500 V (off)*
Overload detection U	> 510 V (cannot be deactivated)
Hysteresis U	5 %, > 5 V

System voltage

Measuring range	500 V_{RMS}
Display range	0…500 V (measurement True-RMS)
Measurement and relative uncertainty	±5 %, > ± 5 V

Mode CCS (dc)

Permissible system leakage capacitance C	≤ 5 µF
Measuring and display range R_F	1 kΩ…2 MΩ
Measurement uncertainty R_F / relative uncertainty R_{an}	±15 %, ±2 kΩ
Measuring and display range C_e	0…17 µF
Measurement uncertainty C_e:	
R_F < 10 kΩ	no measurement
R_F ≥ 10 kΩ	±15 %, ±0.1 µF
Response time t_{an}:	
R_{an} = 2.0 x R_F and C_e = 1 µF acc. to IEC 61557-8	≤ 10 s
R_{an} = 2.0 x R_F and R_F ≤ 100 kΩ	≤ 10 s

Mode CHAdeMO (CHd)

System voltage U_n	measurement from U_n ≥ DC 50 V
Permissible system leakage capacitance C_e	per conductor ≤ 1.6 µF
Measuring and display range R_F & R_{FU}	1 kΩ…2 MΩ
Measurement uncertainty R_F / relative uncertainty R_{an}	±15 %, ±2 kΩ
Measuring and display range C_e	0…17 µF
Measurement uncertainty C_e:	
R_F < 10 kΩ	no measurement
R_F ≥ 10 kΩ	±15 %, ±0.1 µF
Response time t_{an}:	
R_{an} = 2.0 x R_{FU} and R_{FU} ≤ 100 kΩ	≤ 10 s
R_{an} = 2.0 x R_F	≤ 10 s

Displays, memory

Password	off / 0…999 (off / 0)*
Fault memory alarm messages	on/(off)*
Display	LC display, multifunctional, not illuminated

Time response

Start-up delay t	0…10 s (0 s)*
Response delay t_{on}	0…99 s (0 s)*
Delay on release t_{off}	0…99 s (0 s)*

Interface

Interface / protocol	RS-485 / BMS, Modbus RTU, isoData
Baud rate	BMS (9.6 kbit/s), Modbus RTU (selectable), isoData (115.2 kbit/s)
Cable length (9.6 kbit/s)	≤ 1200 m
Cable: twisted pairs	min. J-Y(St)Y 2 x 0.6
Terminating resistor	120 Ω (0.25 W), internal, can be connected
Device address, BMS bus, Modbus RTU	3…90 (3)*

Switching elements

Switching elements	2 x 1 N/O contact, common terminal 11
Operating principle	N/C operation, N/O operation (N/C operation)*
Electrical endurance under rated operating conditions	10,000 cycles

Contact data acc. to IEC 60947-5-1

Utilisation category	AC-12 / AC-14 / DC-12 / DC-12 / DC-12
Rated operational voltage	230 V / 230 V / 24 V / 110 V / 220 V
Rated operational current	5 A / 2 A / 1 A / 0.2 A / 0.1 A
Minimum contact load	1 mA at DC ≥ 5 V

Contact data acc. to UL 508

Rated operational voltage	AC 250 V
Rated operational current	2 A

Environment/EMC

EMC	IEC 61326-2-4; IEC 61851-21-2:2018-04 Ed. 1.0

Ambient temperatures

Operation	–40…+70 °C[1]
Transport	–40…+85 °C
Storage	–40…+70 °C

[1] Below –25 °C the readability of the display is limited.

Classification of climatic conditions acc. to IEC 60721
(related to temperature and relative humidity)

Stationary use (IEC 60721-3-3)	3K22
Transport (IEC 60721-3-2)	2K11
Long-term storage (IEC 60721-3-1)	1K22

Classification of mechanical conditions acc. to IEC 60721

Stationary use (IEC 60721-3-3)	3M11
Transport (IEC 60721-3-2)	2M4
Long-term storage (IEC 60721-3-1)	1M12

Connection

Screw terminals

Nominal current	≤ 10 A
Tightening torque	0.5…0.6 Nm (5…7 lb-in)
Conductor sizes	AWG 24…12
Stripping length	8 mm
Rigid/flexible	0.2…2.5 mm^2
Flexible with ferrules with/without plastic sleeve	0.25…2.5 mm^2
Multiple conductor	
rigid/flexible	0.2…1.5 mm^2
with ferrules without plastic sleeve	0.25…1.5 mm^2
with TWIN ferrules with plastic sleeve	0.25…1.5 mm^2

Push-wire terminals

Nominal current	≤ 10 A
Cross section	AWG 24…14
Stripping length	10 mm
Rigid	0.2…2.5 mm^2
Flexible	
without ferrules	0.75…2.5 mm^2
with ferrules with/without plastic sleeve	0.25…2.5 mm^2
Multi-conductor flexible with TWIN ferrules with plastic sleeve	0.5…1.5 mm^2
Opening force	50 N
Test opening	Ø 2.1 mm

Other

Operating mode	continuous operation
Mounting	cooling slots must be ventilated vertically
Degree of protection, built-in components (DIN EN 60529)	IP30
Degree of protection, terminals (DIN EN 60529)	IP20
Enclosure material	polycarbonate
DIN rail mounting acc. to	IEC 60715
Screw mounting	2 x M4 with mounting clip
Documentation number	D00352
Weight	≤ 150 g

( )* = factory setting

Dimension diagram (dimensions in mm)

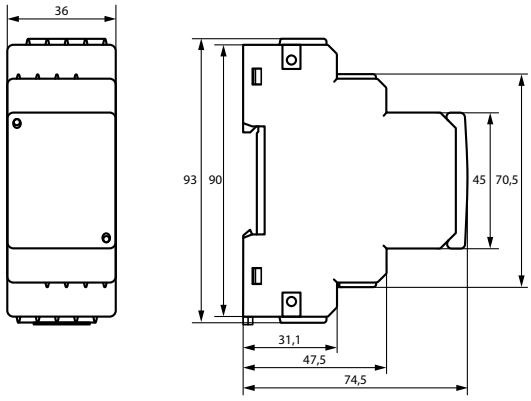

Wiring diagram

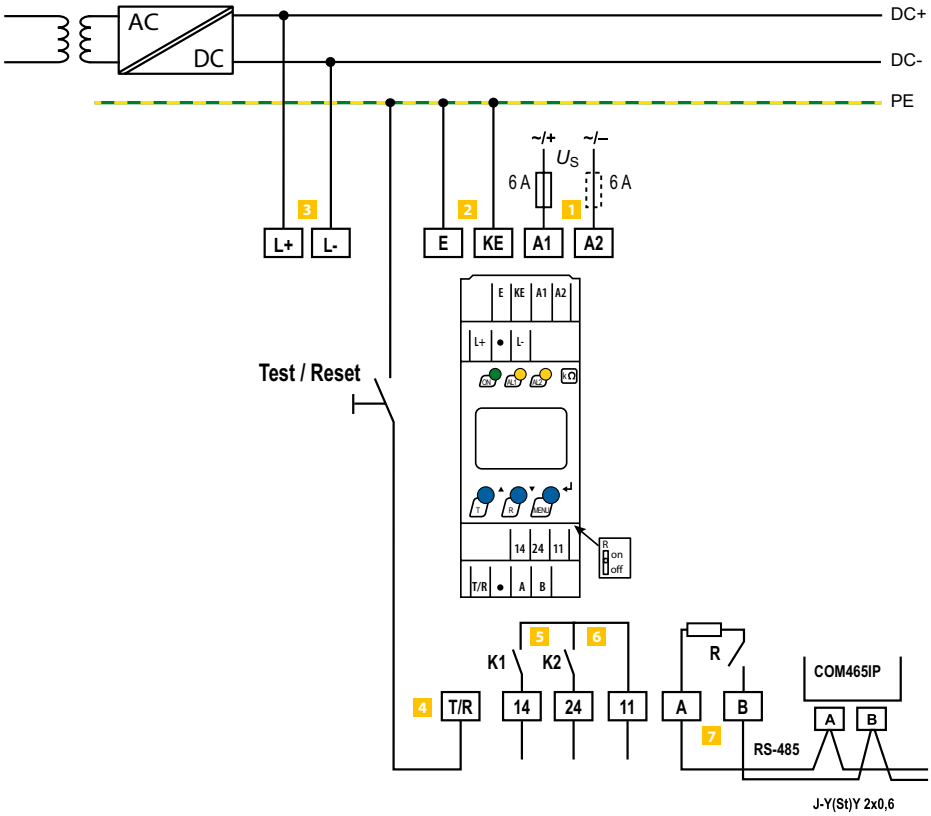

1 **A1, A2** Connection to the supply voltage U_S via fuse (line protection):
If supplied from an IT system, protect both lines by a fuse.*

2 **E, KE** Connect each terminal separately to PE:
Use same wire cross section as for ‚A1', ‚A2'.

3 **L+, L–** Connection to the system to be monitored
Indication in display: ‚L1' for L+; ‚L2' for L

4 **T/R** Connection for the external combined test and reset button

5 **11, 14** Connection to alarm relay ‚K1'

6 **11, 24** Connection to alarm relay ‚K2'

7 **A, B** RS-485 communication interface with connectable terminating resistor
Example: Connection of a BMS Ethernet gateway COM465IP

For UL applications:
Use 60/70 °C copper lines only!
For UL and CSA applications, using 5 A fuses for the protection of the supply voltage U_S is mandatory.

ISOMETER® isoCHA425HV with AGH420-1

Insulation monitoring device with coupling device for unearthed DC systems (IT systems)
DC 0 V to 1000 V. Suitable for DC charging stations according to CCS or CHAdeMO

DC

Typical applications

- DC charging stations for electric vehicles in accordance with the Japanese charging standard CHAdeMO
- DC charging stations for electric vehicles according to CCS (Combined Charging System) in compliance with IEC 61851-23

Approvals

Device features

- Monitoring of the insulation resistance RF of DC charging stations according to CHAdeMO standard or Combined Charging System (CCS).
- ***CHAdeMO (Mode CHd and CHA):***

CHAdeMO	Mode	
	CHd	CHA
Maximum system leakage capacitance 1.6 µF per conductor	✓	✓
Detection of insulation faults in the system voltage range 50 V to 1000 V	✓	✓
One-pole insulation faults R_{FU} $R_{FU} \leq 100$ kΩ: Response time ≤ 1 s 100 kΩ < $R_{FU} \leq 2$ MΩ: Response time ≤ 10 s	✓	✓
Two-pole insulation faults R_{FS} $R_{FS} \leq 160$ kΩ: Response time ≤ 10 s $R_{FS} > 160$ kΩ (200 kΩ): no detection (Deactivation)	✓	--

- ***CCS (Mode dc):***

Detection of insulation faults up to 2 MΩ
Maximum system leakage capacitance 20 µF
Response time t_{an} at $C_e \leq 5$ µF or $R_F \leq 100$ kΩ: ≤ 10 s

- Measurement of the system leakage capacitance C_e
- Measurement of the system voltage U_n (True RMS) with undervoltage/overvoltage detection
- Measurement of the DC residual voltages U_{L1e} (between L1/+ and earth) and U_{L2e} (between L2/- and earth)
- Selectable start-up delay, response delay and delay on release
- Two separately adjustable response value ranges of 5…600 kΩ (Alarm 1, Alarm 2)
- Alarm output via LEDs ("AL1", "AL2"), a display and alarm relays ("K1", "K2")
- Automatic device self test with connection monitoring
- Selectable N/C or N/O relay operation
- Measured value indication via a multifunctional LC display
- Fault memory can be activated
- RS-485 (galvanically separated) including the following protocols:
  – BMS interface (Bender measuring device interface) for data exchange with other Bender components
  – Modbus RTU
  – IsoData (for continuous data output)
- Password protection to prevent unauthorised parameter changes
- Stop mode to deactivate the measuring pulse generator

Standards

The ISOMETER® has been developed in compliance with the following standards:

- DIN EN 61557-8 (VDE 0413-8): 2015-12/Ber1: 2016-12
- IEC 61557-8: 2014/COR1: 2016
- IEC 61851-21-2: 2018-04 Version 1.0
- IEC 61851-23
- UL2231-1/-2

Further information

For further information refer to our product range on www.bender.de.

Ordering information

Type	Nominal system voltage U_n	Art. No.	
		Screw-type terminal	Push-wire terminal
isoCHA425HV-D4-4 + AGH420-1	DC 0 (50*)…1 000 V	B91036396	B71036396

* Value for CHAdeMo

Accessories

Description	Art. No.
Mounting clip for screw mounting (1 piece per device)	B98060008

Technical data isoCHA425HV

Insulation coordination acc. to IEC 60664-1/IEC 60664-3

Definitions:	
Supply circuit (IC2)	A1, A2
Output circuit (IC3)	11, 14, 24
Control circuit (IC4)	Up, KE, T/R, A, B, AK1, GND, AK2
Rated voltage	240 V
Overvoltage category	III
Rated impulse voltage:	
IC2/(IC3-4)	4 kV
IC3/IC4	4 kV
Rated insulation voltage:	
IC2/(IC3-4)	250 V
IC3/IC4	250 V
Pollution degree	3
Protective separation (reinforced insulation) between:	
IC2/(IC3-4)	overvoltage category III, 300 V
IC3/IC4	overvoltage category III, 300 V
Voltage tests (routine test) acc. to IEC 61010-1:	
IC2/(IC3-4)	DC ±3.1 kV
IC3/IC4	AC 2.2 kV

Supply voltage

Supply voltage U_s	AC 100…240 V/DC 24…240 V
Tolerance of U_s	-30…+15 %
Frequency range U_s	47…63 Hz
Power consumption	≤ 3 W, ≤ 9 VA

IT system being monitored

Nominal system voltage U_n with AGH420-1	DC 0…1000 V
Tolerance of U_n	DC +10 %
Nominal system voltage range Un with AGH420-1 (UL508)	DC 0…600 V

Response values

Response value R_{an1}	R_{an2}…600 kΩ (600 kΩ)*
Response value R_{an2}	5 kΩ…R_{an1} (120 kΩ)*
Hysteresis R_{an}	25 %, > 1 kΩ
Undervoltage detection U<	10 V…1.09 kV (off)*
Overvoltage detection U>	11 V…1.10 kV (off)*
Overload detection U	1.20 kV (cannot be deactivated)
Hysteresis U	5 %, > 5 V

System voltage

Measuring range	DC ±1200 V
Display range	0 V…1.2 kV (measurement True RMS)
Measurement and relative uncertainty	±5 %, > ±5 V

Mode CCS (dc)

Permissible system leakage capacitance C_e	≤ 20 µF
Permissible system leakage capacitance C_e (acc. to UL2231-1/-2)	≤ 5 µF
Measuring and display range R_F	1 kΩ…2 MΩ
Measurement uncertainty R_F / relative uncertainty R_{an}:	
C_e ≤ 5 µF	±15 %, ± 2 kΩ
C_e > 5 µF and R_F >100 kΩ	±(5 % * R_{an}/100 kΩ +10%)
Measuring and display range C_e	0…35 µF
Measurement uncertainty C_e:	
R_F < 10 kΩ	no measurement
R_F ≥ 10 kΩ	±15 %, ±0.1 µF
Response time t_{an}:	
R_{an} = 2.0 x R_F and C_e = 1 µF acc. to IEC 61557-8	≤ 10 s
R_{an} = 2.0 x R_F and C_e ≤ 5 µF or R_F ≤ 100 kΩ	≤ 10 s

Mode CHAdeMO (CHd an CHA)

System voltage U_n	measurement only from U_n ≥ DC 50 V
Permissible system leakage capacitance C_e	per conductor ≤ 1.6 µF

One-pole fault R_{FU}

Measuring and display range R_{FU}	1 kΩ…2 MΩ
Measurement uncertainty R_{FU} / relative uncertainty R_{an}:	
U_n ≥ 100 V and R_{FU} ≤ 200 kΩ	±15 %, ±2 kΩ
U_n > 200 V	±15 %, ±2 kΩ

Two-pole fault RFS (only CHd Mode)

Measuring and display range R_{FS}	1 kΩ…160 kΩ
Measurement uncertainty R_{FS} / Relative uncertainty R_{an}:	
< 160 kΩ	±15 %, ±2 kΩ
Measuring and display range C_e	0…35 µF
Measurement uncertainty C_e:	
R_F < 10 kΩ	no measurement
R_F ≥ 10 kΩ	±15 %, ±0.1 µF
Response time t_{an}:	
R_{an} = 1.2 x R_{FU} and R_{FU} ≤ 100 kΩ and U_n > 100 V	≤ 1.0 s
R_{an} = 1.2 x R_F	≤ 10 s

Displays, memory

Password	off/0…999 (off/0)*
Fault memory alarm messages	on/(off)*
Display	LC display, multifunctional, not illuminated

Time response

Start-up delay t	0…10 s (0 s)*
Response delay t_{on}	0…99 s (0 s)*
Delay on release t_{off}	0…99 s (0 s)*

Interface

Interface/protocol	RS-485/BMS, Modbus RTU, isoData
Baud rate	BMS (9.6 kbit/s), Modbus RTU (selectable), isoData (115.2 kbits/s)
Cable length (9.6 kBits/s)	≤ 1 200 m
Cable: twisted pairs	min. J-Y(St)Y 2 x 0.6
Terminating resistor	120 Ω (0.25 W), internal, can be connected
Device address, BMS bus, Modbus RTU	3…90 (3)*

Switching elements

Switching elements	2 x 1 N/O contact, common terminal 11
Operating principle	N/C operation, N/O operation (N/C operation)*
Electrical endurance under rated operating conditions, number of cycles	10000

Contact data acc. to IEC 60947-5-1:

Utilisation category	AC-12 / AC-14 / DC-12 / DC-12 / DC-12
Rated operational voltage	230 V / 230 V / 24 V / 110 V / 220 V
Rated operational current	5 A / 2 A / 1 A / 0,2 A / 0,1 A
Minimum contact load	1 mA at DC ≥ 5 V

Contact data acc. to UL508

Rated operational voltage	AC 250 V
Rated operational current	2 A

Environment/EMC

EMC	IEC 61326-2-4, IEC 61851-21-2:2018-04 Ed. 1.0

Ambient temperatures:

Operation	-40…+70 °C 1)
Transport	-40…+85 °C
Storage	-40…+70 °C

1) The readability of the display below the temperature of -25 °C is limited.

Technical data isoCHA425HV

Classification of climatic conditions acc. to IEC 60721 (related to temperature and relative humidity)**:**	
Stationary use (IEC 60721-3-3)	3K22
Transport (IEC 60721-3-2)	2K11
Long-term storage (IEC 60721-3-1)	1K22
Classification of mechanical conditions acc. to IEC 60721:	
Stationary use (IEC 60721-3-3)	3M11
Transport (IEC 60721-3-2)	2M4
Long-term storage (IEC 60721-3-1)	1M12

Other	
Operating mode	continuous operation
Mounting	cooling slots must be ventilated vertically
Degree of protection, built-in components (DIN EN 60529)	IP30
Degree of protection, terminals (DIN EN 60529)	IP20
Enclosure material	polycarbonate
DIN rail mounting acc. to	IEC 60715
Screw mounting	2 x M4 with mounting clip
Weight	≤ 150 g

( )* = factory settings

Technical data AGH420-1

Insulation coordination acc. to IEC 60664-1/IEC 60664-3	
Definitions:	
Measuring circuit (IC1)	L1/+, L2/-
Control circuit (IC2)	AK1, GND, AK2, Up, E
Rated voltage	1000 V
Overvoltage category	III
Rated impulse voltage:	
IC1/IC2	8 kV
Rated insulation voltage:	
IC1/IC2	1 000 V
Pollution degree	3
Protective separation (protective impedance) between:	
IC1/IC2	overvoltage category III, 1000 V
IT system being monitored	
Nominal system voltage range U_n	DC 0…1 000 V
Tolerance of U_n	DC +10 %
Nominal system voltage range U_n (UL508)	DC 0…600 V
Measuring circuit	
Measuring voltage U_m	±45 V
Measuring current I_m at R_F	≤ 400 µA
Internal DC resistance R_i	≥ 120 kΩ

Environment/EMC	
EMC	IEC 61326-2-4
Ambient temperatures:	
Operation	-40…+70 °C
Transport	-40…+85 °C
Storage	-40…+70 °C
Classification of climatic conditions acc. to IEC 60721 (related to temperature and relative humidity)**:**	
Stationary use (IEC 60721-3-3)	3K22
Transport (IEC 60721-3-2)	2K11
Long-term storage (IEC 60721-3-1)	1K22
Classification of mechanical conditions acc. to IEC 60721:	
Stationary use (IEC 60721-3-3)	3M11
Transport (IEC 60721-3-2)	2M4
Long-term storage (IEC 60721-3-1)	1M12
Single cables for terminals Up, AK1, GND, AK2:	
Cable length (AGH420-1 ➔ isoCHA425HV)	≤ 0.5 m
Cross section	≥ 0.75 mm²
Other	
Operating mode	continuous operation
Mounting	cooling slots must be ventilated vertically
Distance to adjacent devices from U_n > 800 V	≥ 30 mm
Degree of protection, built-in components (DIN EN 60529)	IP30
Degree of protection, terminals (DIN EN 60529)	IP20
Enclosure material	polycarbonate
DIN rail mounting acc. to	IEC 60715
Screw mounting	2 x M4 with mounting clip
Weight	≤ 150 g

Connection (for isoCHA425HV and AGH420-1)

Connection type	Screw or push-wire terminal
Screw terminals:	
Nominal current	≤ 10 A
Tightening torque	0,5…0,6 Nm (5…7 lb-in)
Conductor sizes.	AWG 24-12
Stripping length	8 mm
Rigid / flexible	0.2…2.5 mm²
Flexible with ferrules with/without plastic sleeve	0.25…2.5 mm²
Multiple conductor rigid.	0.2…1.5 mm²
Multiple conductor flexible	0.2…1.5 mm²
Multiple conductor with ferrules without plastic sleeve	0.25…1.5 mm²
Multiple conductor flexible with TWIN ferrules with plastic sleeve	0.25…1.5 mm²

Push-wire terminals:	
Nominal current	≤ 10 A
Cross section	AWG 24-14
Stripping length	10 mm
Rigid	0.2…2.5 mm²
Flexible without ferrules	0.75…2.5 mm²
Flexible with ferrules with/without plastic sleeve	0.25…2.5 mm²
Multi-conductor flexible with TWIN ferrules with plastic sleeve.	0.5…1.5 mm²
Opening force	50 N
Test opening	Ø 2.1 mm

Dimension diagram (dimensions in mm)

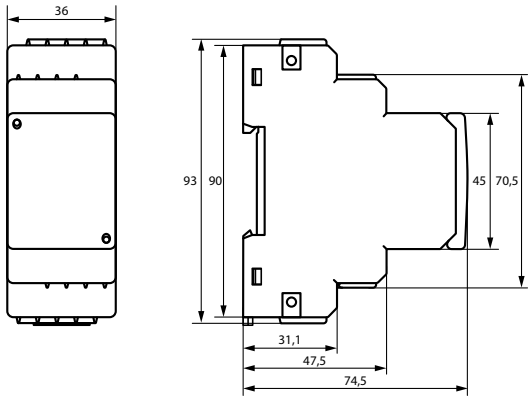

Wiring diagram

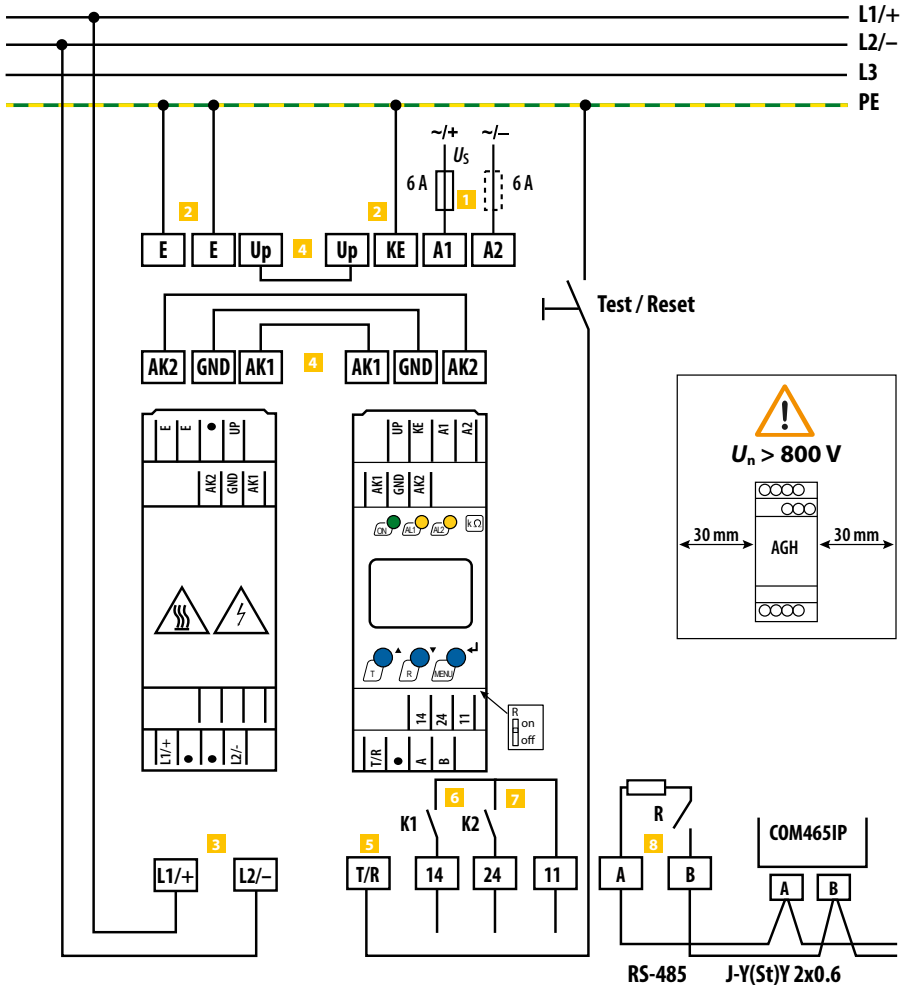

1	**A1, A2**	Connection to the supply voltage via fuse. If being supplied from an IT system, both lines have to be protected by a fuse.*
2	**E, E, KE**	Connect each terminal separately to PE: The same wire cross section as for "A1", "A2" is to be used.
3	**L+, L–**	Connection to the IT system to be monitored.
4	**Up, AK1, GND, AK2**	Connect the terminals of the AGH420-1 to the corresponding terminals of the ISOMETER® isoCHA425HV.
5	**T/R**	Connection for external combined test and reset button.
6	**11, 14**	Connection to alarm relay "K1"
7	**11, 24**	Connection to alarm relay "K2"
8	**A, B**	RS-485 communication interface with connectable terminating resistor. Example: Connection of a BMS Ethernet gateway COM465IP

* ***For UL applications:***

Use 60/75 °C copper lines only!
UL and CSA applications require the supply voltage to be protected via 5 A fuses.

Device overview Equipment for insulation fault location ISOSCAN®

					
		ISOSCAN® EDS440	ISOSCAN® EDS441	ISOSCAN® EDS441-LAB	ISOSCAN® EDS440-LAF
Catalogue page		140	140	140	140
Special applications		–	–	High-resistance insulation faults in case of high system leakage capacitances and low test current value	Use with flexible strap transformers CTAF
Application		stationary	stationary	stationary	stationary
Circuits	Control circuits	–	✓	✓	–
	Main circuits	✓	–	–	✓
Voltage system	3(N)AC	✓	–	–	✓
	AC	✓	✓	✓	✓
	AC/DC	✓	✓	✓	✓
	DC	✓	✓	✓	✓
Nominal voltage U_n max		see Locating current injector (e. g. ISOMETER® iso685-D-P)	AC 20…276 V, DC 20…308 V	AC 20…276 V, DC 20…308 V	see Locating current injector (e. g. ISOMETER® iso685-D-P)
System leakage capacitance C_e µF		acc. to characteristic curve	acc. to characteristic curve	acc. to characteristic curve	acc. to characteristic curve
Response value R_{an} kΩ		acc. to characteristic curve	acc. to characteristic curve	acc. to characteristic curve	acc. to characteristic curve
Installa-tion	DIN rail	✓	✓	✓	✓
	Screw mounting	✓	✓	✓	✓
Interfaces	BB	EDS440-S	EDS441-S	–	–
	BS	EDS440-L	EDS441-L	✓	✓
	BMS	–	–	–	–
Product details (Products on www.bender.de/en)					

	Type	C. p.	Suitable system components			
Suitable ISOMETER®s with integrated PGH	iso685-D-P	20	✓	✓	✓	–
	isoMED427P	78	–	✓	–	–
	isoPV1685P	92	–	–	–	–
	iso1685DP	64	–	–	–	–
Measuring current transformers	CTAC…	342	✓	✓	–	–
	CTUB100	345	–	–	✓	–
	WR…S(P)	349	✓	–	–	–
	CTBS25	354	✓	–	–	–
	WS…	356	✓	–	–	–
	WS…-8000	356	–	✓	✓	–
	CTAF…	–	–	–	–	✓
Power supply unit	AN410	384	–	–	✓	–
	AN450	386	–	–	✓	–
	STEP-PS	381	–	–	✓	–
Relay module	IOM441	392	✓	✓	✓	✓

		
ISOSCAN® EDS150	**ISOSCAN® EDS151**	**ISOSCAN® EDS30…**
147	**147**	**150**
–	Medical locations	EDS3096PG for de-energised systems
stationary	stationary	portable
–	✓	✓
✓	–	✓
✓	–	✓
✓	✓	✓
✓	✓	✓
✓	✓	✓
see Locating current injector (e. g. ISOMETER® iso685-D-P)	AC 20…276 V, DC 20…308 V	dependent on type
acc. to characteristic curve	acc. to characteristic curve	acc. to characteristic curve
acc. to characteristic curve	acc. to characteristic curve	acc. to characteristic curve
–	–	–
✓	✓	–
–	–	–
–	–	–
✓	✓	–

Suitable system components

–	–	✓
–	✓	✓
✓	–	✓
✓	–	✓
–	–	–
–	–	–
–	–	–
–	–	–
–	–	–
–	–	–
–	–	–
✓	✓	–
✓	✓	–
–	–	–
–	–	–

ISOSCAN® EDS440/441

Insulation fault locators for localisation of insulation faults in unearthed DC, AC and three-phase power supply systems (IT systems)

Typical applications

- Insulation fault location in AC, 3AC and DC IT systems
- Main circuits and control circuits in industrial plants and ships
- Diode-decoupled DC IT systems in power plants
- Systems for medical locations

Approvals

Device features

- Universal system concept
- Modular design, therefore easily adjustable to the given circumstances
- Measuring current transformers available in various sizes and versions
- CT connection monitoring
- 12 measuring channels for measuring current transformer series CTAC…, WR…, WS…
- Optional extension by 12 relay channels
- Fault memory behaviour selectable
- Up to 50 EDS insulation fault locators in the system, 600 measuring channels
- Response sensitivity: EDS440 2…10 mA, EDS441 0.2…1 mA
- AC residual current measurement with configurable response value
- Two alarm relays with one N/O contact each
- N/O or N/C operation selectable
- External test/reset
- Central display of faulty outgoing circuits
- Serial interface RS-485, BS bus address range 2…79, Modbus RTU
- Connection to higher-level control and visualisation systems possible

Standards

Observe the applicable national and international standards. The EDS44x series meets the device standards:

- DIN VDE 0100-410 (VDE 0100-410)
- DIN EN 61557-9 (VDE 0413-9)
- IEC 61557-9
- DIN EN 50155 (VDE 0115-200)
- DIN EN 45545-2

Further information

For further information refer to our product range on www.bender.de.

Ordering information

Type	Response value	Supply voltage U_s[1]	LED display	Option "W" -40…+70 °C, 3K23, 3M12	Art. No.
EDS440-S-1	2…10 mA	DC 24 V	–	–	B91080201
EDS440W-S-1				✓	B91080201W
EDS440-L-4		AC/DC 24…240 V	✓	–	B91080202
EDS440W-L-4				✓	B91080202W
EDS441-S-1	0,2…1 mA	DC 24 V	–	–	B91080204
EDS441W-S-1				✓	B91080204W
EDS441-L-4		AC/DC 24…240 V	✓	–	B91080205
EDS441W-L-4				✓	B91080205W
EDS441-LAB-4				–	B91080207
EDS441W-LAB-4				✓	B91080207W
EDS440-LAF-4	10 mA	AC/DC 24…240 V	✓	–	B91080209

[1] Absolute values

Accessories

Description	Art. No.
Plug kit, screw terminals[1]	B91080901
Plug kit, push-wire terminals	B91080902
Mechanical accessories (terminal cover, 2 mounting clips) [1]	B91080903
BB bus 4TE Connector [2]	B98110002

[1] included in the scope of delivery
[2] included in the scope of delivery of EDS44x-S-4

Suitable system components

Description	Design	Type of construction	Type	Art. No.	Page
RS-485 repeater	Bus repeater	–	DI-1PSM	B95012044	–
	Supplied by the USB port	–	DI-2USB	B95012045	**391**
Relay module	12-fold relay module (input/output mudule)	–	IOM441(W)-S	B95012057(W)	**392**
Measuring current transformers	pulsed DC sensitive	circular	CTAC…	B981100…	**342**
			CTUB104-CTBC…	B781200…	**345**
			W…-S…	B9117…	**340**
		rectangular	WR…S(P)	B9117…	**349**
		split-core	WS…	B980806…	**356**
		flexible	CTAF…	B981100…	–

Technical data

Insulation coordination acc. to IEC 60664-1/IEC 60664-3

Definitions	
Supply circuit (IC1)	A1, A2
Output circuit 1 (IC2)	13, 14
Output circuit 2 (IC3)	23, 24
Control circuit (IC4)	(A1, A2), (13,14)-(23,24)-(X1, X3)
Rated voltage	1000 V
Overvoltage category	III
Range of use	≤ 2000 m AMSL
Rated impulse voltage	
IC1/(IC2-4)	4 kV
IC2/(IC3-4)	4 kV
IC3/(IC4)	4 kV
Rated insulation voltage	
IC1/(IC2-4)	AC 250 V
IC2/(IC3-4)	250 V
IC3/IC4	250 V
Pollution degree outside (U_n < 690 V)	3
Pollution degree outside (U_n > 690 < 1000 V)	2
Protective separation (reinforced insulation) between	
IC1/(IC2-4)	Overvoltage category III, 1000 V
IC2/(IC3-4)	Overvoltage category III, 300 V
IC3/IC4	Overvoltage category III, 300 V
Voltage tests (routine test) acc. to IEC 61010-1	
IC2/(IC3-4)	AC 2.2 kV
IC3/IC4	AC 2.2 kV

Supply voltage

Supply voltage range U_s EDS44…-L (…-LAB, …-LAF)	AC/DC 24…240 V
Supply voltage range U_s EDS44…-S	DC 24 V
Tolerance of U_s	-20…+15%
Frequency range of U_s	DC, 50…400 Hz[1 (2]
Tolerance of the frequency range of U_s	-5…+15 %
Power consumption, typically 50 Hz (400 Hz) EDS44…-L	≤ 4 W/7 VA (≤ 4 W, 28 VA)
Power consumption, typically (DC via BB bus) EDS44…-S	≤ 1 W

Response values

Response value insulation fault location ($I_{\Delta L}$) EDS440	2…10 mA
Response value insulation fault location ($I_{\Delta L}$) EDS441	0.2…1 mA
Relative uncertainty ($I_{\Delta L}$) EDS440	±30 %, min. ±2 mA[3]
Relative uncertainty ($I_{\Delta L}$) EDS441	±30 %, min. ±0.2 mA[3]
Response value residual current measurement ($I_{\Delta n}$) EDS440	100 mA…10 A
Response value residual current measurement ($I_{\Delta n}$) EDS441	100 mA…1 A
Relative uncertainty ($I_{\Delta n}$) EDS44x (42…60 Hz)	±5 %
Relative uncertainty ($I_{\Delta n}$) EDS44x (61…1000 Hz)	-20…0 %
Hysteresis	20 %

Time response

Scanning time for all channels insulation fault location ($I_{\Delta L}$)	profile-dependent, min. 6 s
Response time residual current measurement ($I_{\Delta n}$)	≤ 400 ms
Response time for measuring current transformer monitoring	max. 18 min

Measuring circuit

Nominal system voltage U_n EDS440	refer to locating current injector (e.g. ISOMETER® iso685-D-P)
Nominal system voltage U_n EDS441	AC 230 V, DC 220 V
Tolerance of U_n EDS441	AC ±15 %, DC ±40 %
Measuring current transformers external for EDS440 type	CTAC…, WR…, WS…
Measuring current transformers external for EDS441type	WS…/8000
Measuring current transformers external for EDS441-LAB	CTBC…
Measuring current transformers external for EDS440-LAF	CTAF…
Load EDS440	47 Ω
Load EDS441, EDS440-LAF	1.5 kΩ
Rated insulation voltage measuring current transformers	800 V

Connection EDS measuring current transformers

Single wire ≥ 0.75 mm²	0…1 m
Single wire, twisted ≥ 0.75 mm²	1…10 m
Shielded cable ≥ 0.5 mm²	10…40 m
Recommended cable (shielded, shield connected to PE on one side)	J-Y (St) Y min. 2 x 0.8

Measuring ranges insulation fault location $I_{\Delta L}$

Rated frequency range	DC, 16.7…1000 Hz
Measuring range insulation fault location ($I_{\Delta L}$) EDS440	1.5…50 mA
Measuring range insulation fault location ($I_{\Delta L}$) EDS441	0.15…5 mA
Maximum permissible residual current	refer to "Diagrams" in the manual

Measuring range residual current measurement $I_{\Delta n}$

Measuring range residual current measurement ($I_{\Delta n}$) EDS440	100mA…20 A
Rated frequency range EDS440-x	50…1000 Hz
Measuring range residual current measurement ($I_{\Delta n}$) EDS441	100mA…2 A
Rated frequency range EDS441-x	50…60 Hz

LEDs

ON (operation LED)	green
COM	yellow
SERVICE	yellow
IΔL ALARM	yellow
IΔn ALARM	yellow
1…12 channel indication	yellow

Digital inputs

Number	2
Operating mode, adjustable	active high, active low
Function	none, test, reset
Voltage level	Low DC -5…5 V, High DC 11…32 V

Digital current output

Number	1
Function	none, $I_{\Delta L}$ alarm, $I_{\Delta n}$ alarm, device error, current transformer connection fault, common alarm, BS bus malfunction
Current	0 mA DC inactive, 20 mA DC active
Tolerance	±10 %
Load resistance	R ≤ 500 Ω/PR ≥ 0.25W

Buzzer

Number	1
Function	none, $I_{\Delta L}$ alarm, $I_{\Delta n}$ alarm, device error, transformer connection fault, insulation fault location active, common alarm

Interfaces

Interface/protocol	RS-485 | BS bus | Modbus RTU
Data rate BS bus	9.6 kBaud/s
Data rate Modbus RTU	9.6 | 19.2 | 37.4 | 57.6 | 115 kBaud/s
Cable length	≤ 1200 m
Cable: twisted pair, one end of shield connected to PE	recommended: J-Y (St) Y min. 2 x 0.8
Connection	X1.A, X1.B
Terminating resistor	120 Ω, can be activated internally
Device address, BS bus	0, 2…79 (optional 0, 2…159)

Switching elements

Number	2 N/O contacts
Operating mode	N/C operation / N/O operation
Function contact 13,14	none, $I_{\Delta L}$ alarm, $I_{\Delta n}$ alarm, device error, CT connection fault, common alarm, BS bus malfunction
Function contact 23,24	none, $I_{\Delta L}$ alarm, $I_{\Delta n}$ alarm, device error, CT connection fault, common alarm, BS bus malfunction
Electrical endurance under rated operating conditions	30000 hrs.
Rated operational voltage	AC 250 V
Rated operational current	7 A
Rated insulation voltage	4 kV

Kontaktdaten nach IEC 60947-5-1

Gebrauchskategorie	AC-13/AC-14/DC-12/DC-12/DC-12/DC-12
Bem.betriebsspannung	230 V/230 V/24 V/48 V/110 V/220 V
Bem.betriebsstrom	5 A/3 A/1 A/1 A/0.2 A/0.1 A
Max. switching capacity	300 W/2770 VA
Max. switching voltage	DC 30 V/AC 277 V
Minimum contact rating	1 mA at AC/DC ≥ 10 V

Environment/EMC

EMC	IEC 61326-2-4

Ambient temperatures

Operating temperature	-25 °C… +55 °C
Transport	-40 °C… +85 °C
Storage	-25 °C…+70 °C

Classification of climatic conditions acc. to IEC 60721:

Stationary use (IEC 60721-3-3)	3K23 (no condensation, no formation of ice)
Transport (IEC 60721-3-2)	2K11
Long-term storage (IEC 60721-3-1)	1K22

Classification of mechanical conditions acc. to IEC 60721:

Stationary use (IEC 60721-3-3)	3M11
Transport (IEC 60721-3-2)	2M4
Long-term storage (IEC 60721-3-1)	1M12

Connection

Connection type	pluggable screw-type terminal or push-wire terminal

Screw-type terminals:

Tightening torque	0.5…0.6 Nm (5…7 lb-in)
Conductor sizes	AWG 24-12
Stripping length	7 mm
rigid/flexible	0.2…2.5 mm²
flexible with ferrule, with/without plastic sleeve	0.25…2.5 mm²
Multiple conductor, rigid	0.2…1 mm²
Multiple conductor, flexible	0.2…1.5 mm²
Multiple conductor, flexible with ferrule without plastic sleeve	0.25…1 mm²
Multiple conductor, flexible with TWIN ferrule with plastic sleeve	0.5…1.5 mm²

Push-wire terminals:

Conductor sizes	AWG 24-12
Stripping length	10 mm
rigid/flexible	0.2…2.5 mm²
flexible with ferrule, with/without plastic sleeve	0.25…2.5 mm²
Multiple conductor, flexible with TWIN ferrule with plastic sleeve	0.5…1.5 mm²

Push-wire terminals X1, X2:

Conductor sizes	AWG 24-16
Stripping length	10 mm
rigid/flexible	0.2…1.5 mm²
flexible with ferrule without plastic sleeve	0.25…1.5 mm²
flexible with ferrule with plastic sleeve	0.25…0.75 mm²

Other

Operating mode	continuous operation
Mounting	at an ambient temperature > 55 °C vertical mounting required at an ambient temperature < 55 °C mounting optional
Degree of protection internal components	IP40
Degree of protection terminals	IP20
DIN rail mounting acc. to	IEC 60715
Screw fixing	2 x M4 with mounting clip
Enclosure material	polycarbonate
Flammability class	UL 94V-0
Dimensions (W x H x D)	72 x 93 x 63
Documentation number	D00201
Weight	approx. 122 g (EDS44x-S) approx. 242 g (EDS44x-L, …-LAB, …-LAF)

"W" option data deviating from the standard version

Devices with the suffix "W" feature increased shock and vibration resistance. The electronics is covered with a special varnish to provide increased protection against mechanical stress and moisture.

Ambient temperatures:

Operating temperature	-40…+70 °C
Transport	-40…+85 °C
Long-term storage	-25…+70 °C

Classification of climatic conditions acc. to IEC 60721:

Stationary use (IEC 60721-3-3)	3K23 (condensation and formation of ice possible)

Classification of mechanical conditions acc. to IEC 60721:

Stationary use (IEC 60721-3-3)	3M11

[1] = At a frequency > 200 Hz, the connection of X1 and k1-12/I1-12 must be insulated.
Only permanently installed devices which at least have overvoltage category CAT2 (300 V) may be connected.

[2] = Only 50/60 Hz are permitted for UL applications.

[3] = Residual current effect of > 100 mA results in a greater relative uncertainty.

Dimension diagram (dimensions in mm)

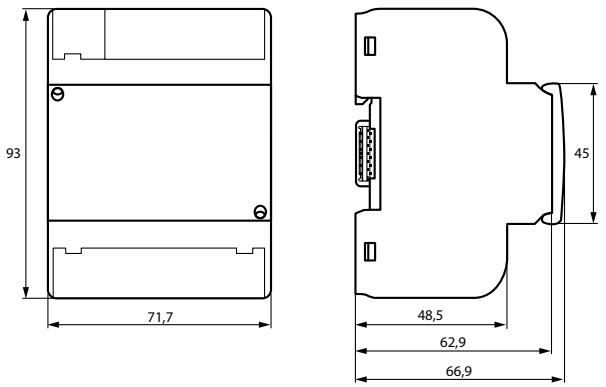

Connection to the voltage supply

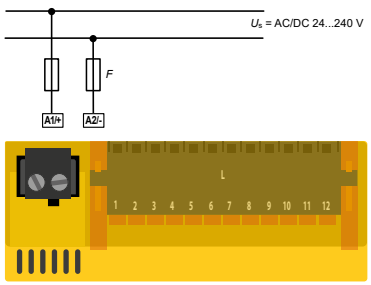

Connection to the X1 interface

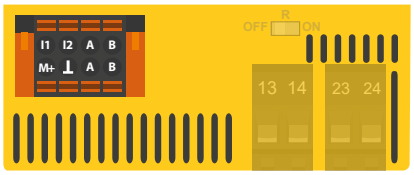

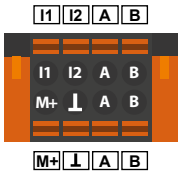

I1	Input 1	M+	Dig. current output
I2	Input 2	⊥	Ground
A	RS-485 A (input)	A	RS-485 A (output)
B	RS-485 B (input)	B	RS-485 B (output)

Connection of relays

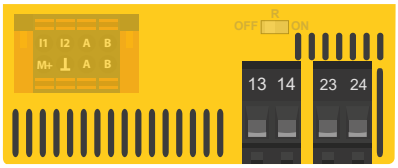

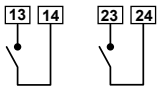

Alarm relay 1	13	N/O contact	Alarm relay 2	23	N/O contact
	14			24	

BS bus termination

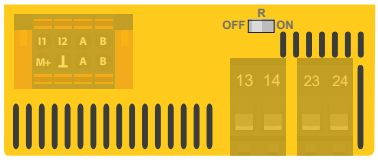

Activating a terminating resistor to define the first and the last device in the bus system.

ON	First and last device in a bus	OFF	All devices between the first and the last device in the bus

Connection to the k1-12/I1-12 interface

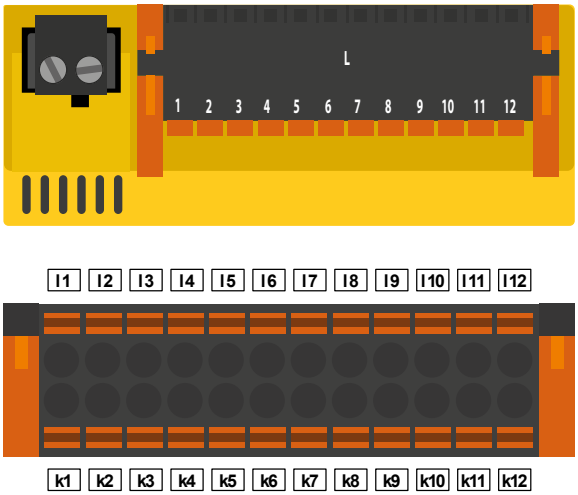

I1	Measuring CT 1	k1
I2	Measuring CT 2	k2
I3	Measuring CT 3	k3

I4	Measuring CT 4	k4
…	…	…
I12	Measuring CT 12	k12

Connection measuring current transformer CTAC…, WR…, WS… series

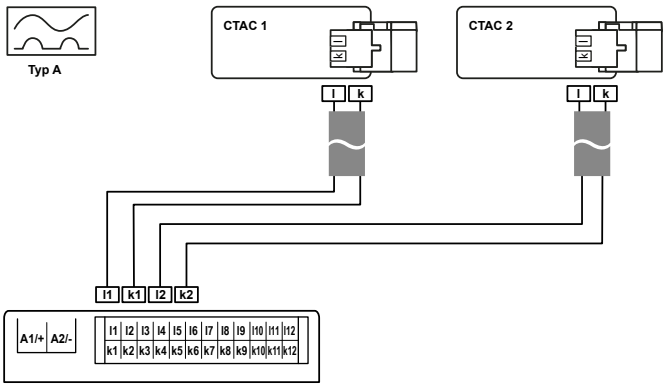

For insulation fault location, the measuring current transformers of the CTAC… (closed), WR… (rectangular) and WS… (split-core) series are used.

Connection of CTAF…SET series measuring current transformers to EDS440-LAF-4

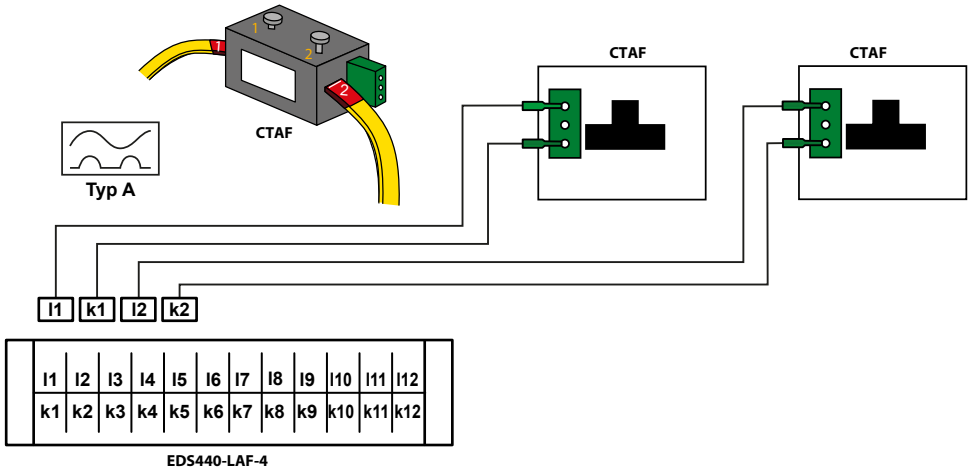

For insulation fault location, the measuring current transformers of the CTAF…SET series are used.

Wiring diagram to 3(N)AC system with iso685-D-P

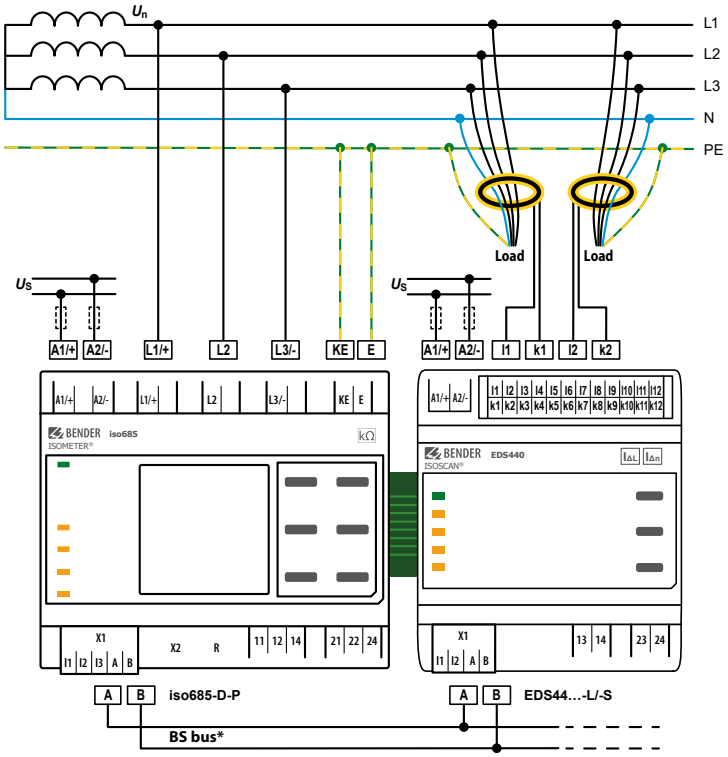

For systems > 690 V and with overvoltage category III a fuse for the connection to the system to be monitored must be provided.
Recommendation: 2A fuses.
* Communication between iso685-x-P and EDS44x-L only via BS bus (RS-485).

Wiring diagram to DC system with iso685-D-P

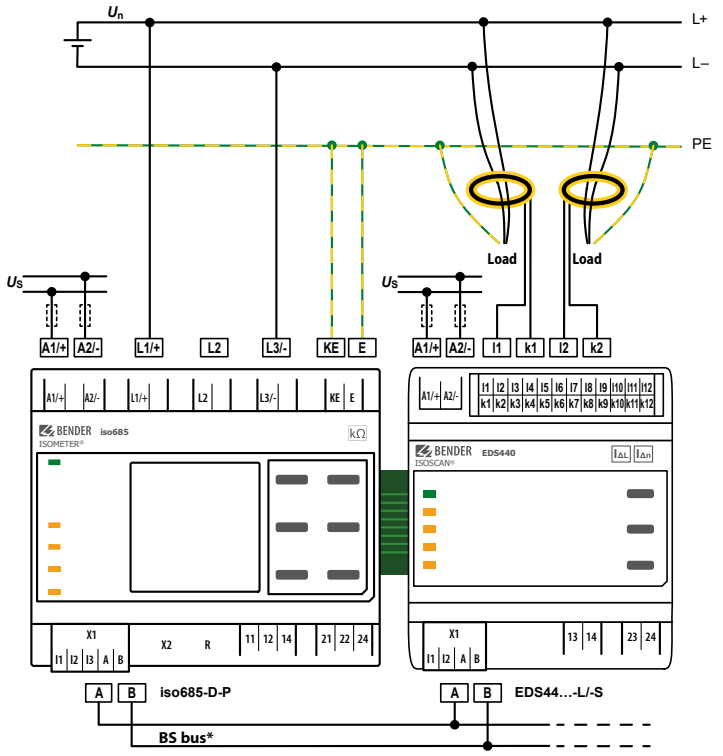

* Communication between iso685-x-P and EDS44x-L only via BS bus (RS-485).

Wiring diagram to AC system with iso685-D-P

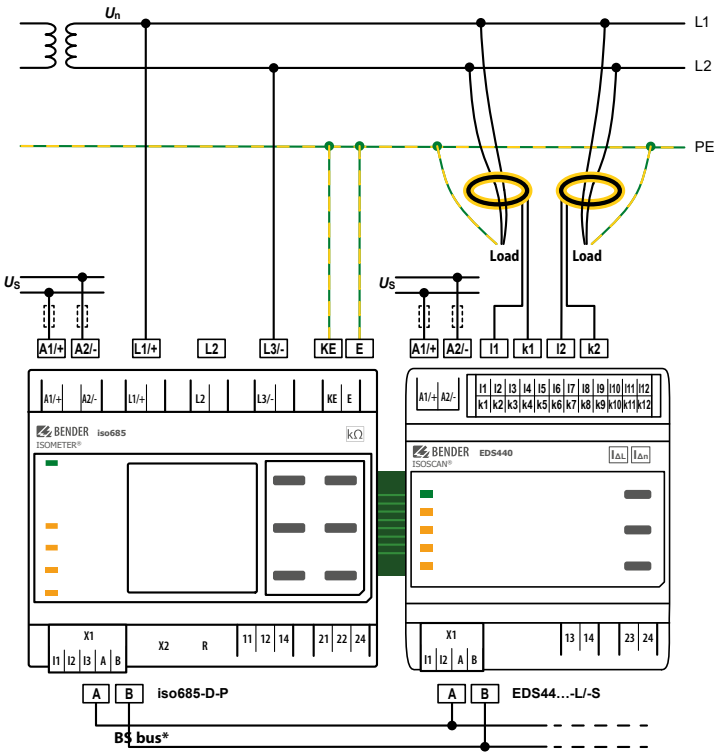

* Communication between iso685-x-P and EDS44x-L only via BS bus (RS-485).

Connection example: iso685-D-P, EDS440-S and EDS440-L

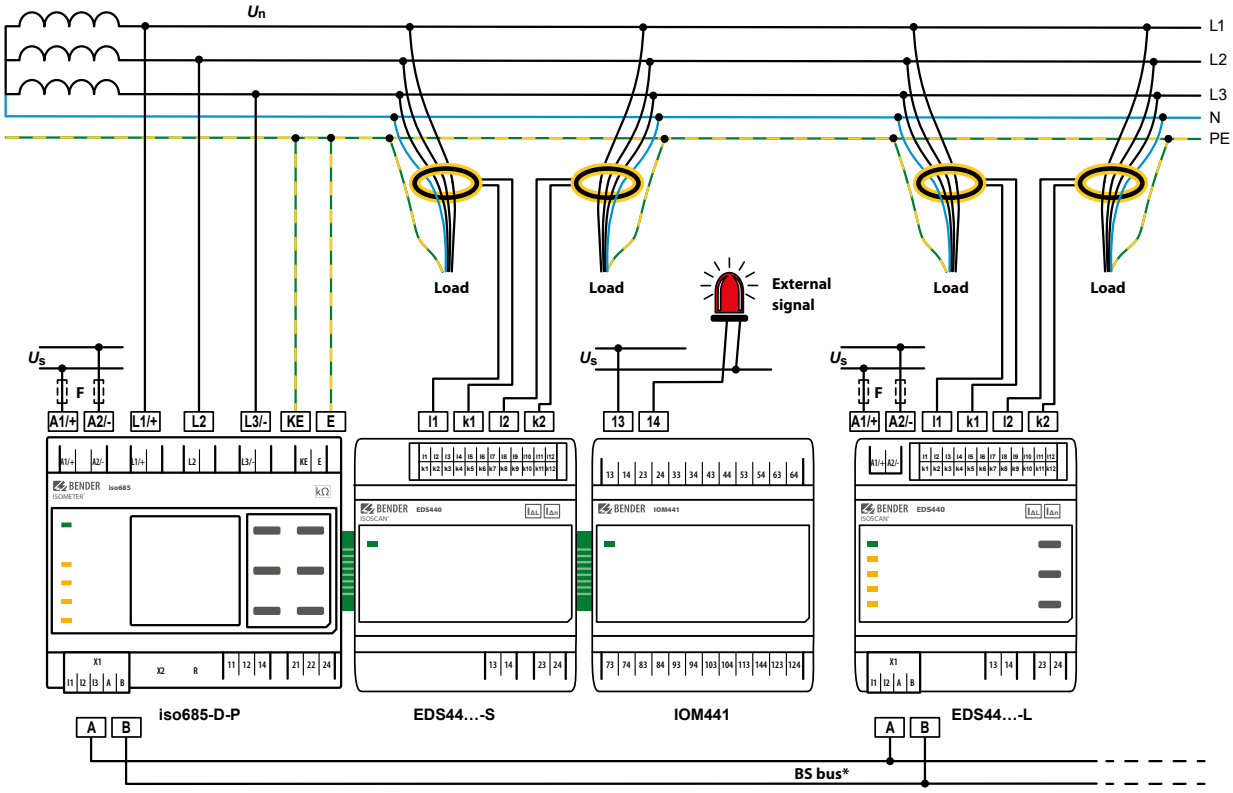

* Communication between iso685-x-P and EDS44x-L only via BS bus (RS-485).

ISOSCAN® EDS150/EDS151

Insulation fault locator with integrated measuring current transformers for EDS systems

Typical applications

- Insulation fault location in AC, AC/DC and DC IT systems
- DC main circuits in industrial plants, power stations and ships
- IT systems for medical locations and control circuits (EDS151)

Approvals

Device features

- Insulation fault location in AC, AC/DC and DC IT systems
- 6 measuring channels with measuring current transformer per EDS150/151
- Up to 528 measuring channels can be combined by the BMS bus in the IT system being monitored: 88 x 6 measuring channels
- Response sensitivity EDS150: 5 mA, EDS151 0.5 mA
- A response time of up to 8 s in the AC system acc. to IEC 61557-9
- RS-485 interface with BMS protocol
- BMS address range 3…90
- Cyclical self test

Standards

The ISOSCAN® EDS150/151 series complies with the requirements of the device standards:

- IEC 61557-9

Further information

For further information refer to our product range on www.bender.de.

Ordering information

Type	Measuring range	Response value		Supply voltage [1] U_s	Art. No.
		EDS function	RCM function		
EDS150	5…25 mA	5 mA	10 A	AC 17…24 V, 50…60 Hz DC 14…28 V	B91080103
EDS151	0,5…2,5 mA	0,5 mA	1 A		B91080101

[1] Absolutwerte

Accessories

Type designation	Art. No.
Mounting clip for DIN rail mounting	B91080110

Suitable system components

Description	Voltage supply	Output voltage	Explanation	Type	Art. No.	Page
Power supply unit	AC 90…264 V/DC 120…370 V/47…63 Hz	DC 24 V, 420 mA	For the supply of max. 6 EDS15…	AN410	B924209	**384**
	AC 230 V/50…60 Hz	AC 20 V, 500 mA	For the supply of max. 6 EDS15…	AN450	B924201	**386**
	AC 127 V/50…60 Hz	AC 20 V, 500 mA	For the supply of max. 6 EDS15…	AN450-133	B924203	**386**

According to IEC 60364-7-710 only power supply units providing "Safe separation" (reinforced insulation) may be used for the supply voltage between the primary and secondary side. All power supply units listed above comply with this requirement!

Insulation coordination acc. to IEC 60664-1/IEC 60664-3

Rated insulation voltage	AC 250 V
Rated impulse voltage/pollution degree	6 kV/3

Voltage ranges

IT system being monitored:

Nominal system voltage U_n	see Locating current injector (e. g. ISOMETER® iso685-D-P) (EDS150) AC 20…276 V, DC 20…308 V (EDS151)
Nominal frequency f_n	42…460 Hz

Supply voltage:

Supply voltage U_s	AC 17…24 V, DC 14…28 V
Frequency range of the supply voltage	50…60 Hz
Power consumption AC	≤ 3 VA
Power consumption DC	≤ 1.5 VA

Measuring circuit

Number of measuring channels (per device/system)	6/528

EDS function:

Response value	EDS150: 5 mA EDS151: 0.5 mA
Relative uncertainty	±30 %
Rated frequency	42…460 Hz
Measuring range EDS function	EDS150: 5…25 mA, EDS151: 0.5…2.5 mA
Response time in the AC system acc. to IEC 61557-9	≤ 8 s

RCM function:

Response value	EDS150: 10 A EDS151: 1 A
Relative uncertainty	±30 %
Frequency range	42…68 Hz

Displays

LEDs:

ON/COM, green	operation indicator/bus activity
Alarm K1…K6, yellow	EDS and RCM function

Interface

Interface/protocol	RS-485/BMS
Connection	terminals A/B
Cable (twisted pair, one end of shield connected to PE)	two-core, recommended: J-Y(St)Y min. 2x0.8
Cable length	≤ 1200 m
Terminating resistor	120 Ω (0.25 W)
Device address, BMS bus	3…90 (3)*

Environment/EMC

EMC	IEC 61326-2-4
Operating temperature	-25…+55 °C
For UL application:	
Maximum ambient temperature 55 °C	

Classification of climatic conditions acc. to IEC 60721:

Stationary use (IEC 60721-3-3)	3K22
Transport (IEC 60721-3-2)	2K11
Long-term storage (IEC 60721-3-1)	1K22

Classification of mechanical conditions acc. to IEC 60721:

Stationary use (IEC 60721-3-3)	3M11
Transport (IEC 60721-3-2)	2M4
Storage (IEC 60721-3-1)	1M12

Connection

Connection type	pluggable push-wire terminal
For UL application:	
Only use 60/75°C copper conductors!	
Connection rigid /flexible/conductor sizes	0.2…1.5 mm² (AWG 24-16)
Multi-conductor connection (2 conductors of the same cross section)	
rigid	0.2…1.5 mm²
flexible	0.2…1.5 mm²
flexible with ferrule without plastic sleeve	0.25…1.5 mm²
flexible with ferrule with plastic sleeve	0.25…0.75 mm²
Stripping length	10 mm

Other

Operating mode	continuous operation
Position of normal use	any
Enclosure material	polycarbonate
Flammability class	UL94 V-0
Screw mounting	2 x M6
Tightening torque	1.5 Nm
Documentation number	D00106 (EDS150) D00107 (EDS151)
Weight	≤ 340 g

( )* = factory setting

Dimension diagrams (dimensions in mm)

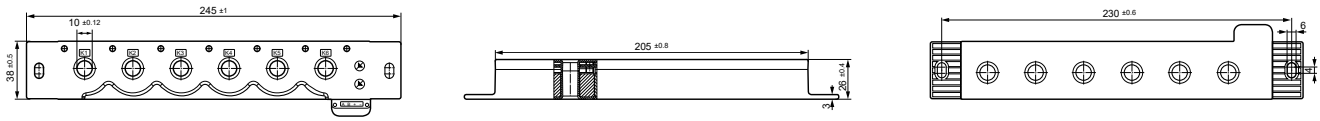

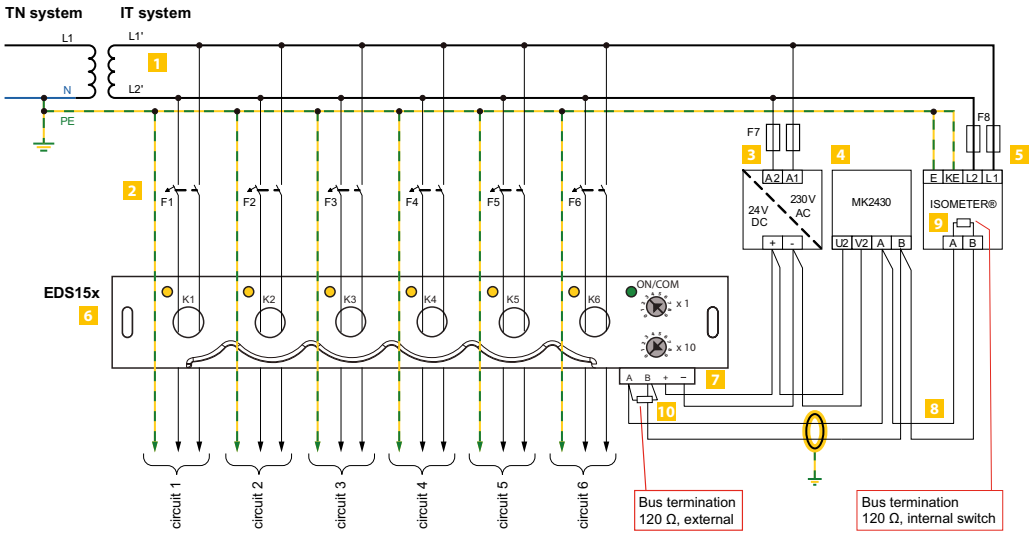

1 Transformer for the IT system to be monitored

2 Circuit breakers for the circuits

3 AN410 for DC 24 V supply voltage

4 Alarm indicator and test combination MK2430 for indication of alarm messages from the EDS150/151 (BMS master)

5 Insulation monitoring devices with locating current injector for insulation fault location systems

6 Insulation fault locator EDS150/151 with integrated measuring current transformers

7 Supply voltage Us DC 24 V

8 Serial interface BMS

9 Terminating resistor BMS bus (120 Ω, internally connected)

10 Terminating resistor BMS bus

ISOSCAN® EDS30…

Portable equipment for insulation fault location for unearthed and earthed systems (IT and TN systems) to be used in conjunction with or without equipment for insulation fault location

Typical applications

- IT systems with or without an incorporated equipment for insulation fault location (EDS)

Approvals

Device features

- Portable insulation fault location systems for IT systems AC 0…790 V/DC 0…960 V/42…460 Hz or de-energised systems
- Residual current measurement in TN/TT systems
- Use in main and control circuits, photovoltaic systems
- Measuring clamps 20/52 mm (115 mm optional)
- Robust aluminium case, convenient to carry
- Locating current injectors PGH18… with variable locating current 1…25 mA
- Integrated locating voltage for de-energised systems (PGH186)

Insulation fault locator EDS195PM

- Backlit LC display, 3 x 16 characters
- Measuring clamps 20/52 mm included in the scope of delivery
- Accumulator (delivered with a power supply unit)
- Response value insulation fault location 2…10 mA for main circuits
- Response value insulation fault location 0.2…1 mA for control circuits
- Response value residual current measurement 10 mA…10 A
- Selectable operating mode insulation fault location/residual current measurement

Standards

The ISOSCAN® EDS30… series complies with the requirements of the device standards:
DIN EN 61557-8 (VDE 0413-8), EN 61557-8, IEC 61557-8, IEC 61326-2-4, DIN EN 60664-1 (VDE 0110-1), DIN EN 60664-3, DIN EN 61557-9, VDE 0413-9, IEC 61557-9, ASTM F1669M-96 (2007), ASTM F1207M-96 (2007)

Further information

For further information refer to our product range on www.bender.de.

Ordering information

Type	Supply voltage U_s	Nominal voltage U_n	Main circuits		Control circuits		Art. No.
			with EDS	without EDS	with EDS	without EDS	
EDS3090	–	AC 20…575 V, 42…460 Hz / DC 20…504 V	EDS440	–	–	–	B91082026
EDS3090PG	AC 230 V, 50…60 Hz	AC 20…575 V, 42…460 Hz / DC 20…504 V	–	✓	–	–	B91082021
EDS3090PG-13	AC 90…132 V, 50…60 Hz	AC 20…575 V, 42…460 Hz / DC 20…504 V	–	✓	–	–	B91082022
EDS3096PG	AC 230 V, 50…60 Hz	AC 0…575 V, 42…460 Hz / DC 0…504 V	–	✓	–	–	B91082025
EDS3096PG-13	AC 90…132 V, 50…60 Hz	AC 0…575 V, 42…460 Hz / DC 0…504 V	–	✓	–	–	B91082029
EDS3091	–	AC 20…265 V, 42…460 Hz / DC 20…308 V	–	–	EDS441	–	B91082027
EDS3091PG	AC 230 V, 50…60 Hz	AC 20…265 V, 42…460 Hz / DC 20…308 V	–	–	–	✓	B91082023
EDS3091PG-13	AC 90…132 V, 50…60 Hz	AC 20…265 V, 42…460 Hz / DC 20…308 V	–	–	–	✓	B91082024
EDS3092PG	AC 230 V, 50…60 Hz	AC 20…265 V, 42…460 Hz / DC 20…308 V	–	✓	–	✓	B91082030
	AC 230 V, 50…60 Hz	AC 20…575 V, 42…460 Hz / DC 20…504 V	–	✓	–	✓	
EDS3096PV	AC 230 V, 50…60 Hz	AC 20…575 V, 42…460 Hz / DC 20…504 V	–	✓	–	–	B91082031

Suitable system components

Designation	Nominal voltage U_n		Type	Art. No.	Page
Measuring clamp 115 mm for EDS3090… and EDS3096…	–	–	PSA3165	B980852	–
Coupling device to extend the voltage range of the PGH185/186	AC 500…790 V, 42…460 Hz DC 400…960 V		AGE185	B980305	162
Accessories for fault location in diode-decoupled systems	–	–	EDS165-SET	B91082007	–

Scope of delivery

Insulation fault locator	Locating current injector	Measuring clamps 20 mm	Measuring clamps 52 mm	Type
EDS195PM	–	PSA3020	PSA3052	EDS3090
EDS195PM	PGH185	PSA3020	PSA3052	EDS3090PG
EDS195PM	PGH185-13	PSA3020	PSA3052	EDS3090PG-13
EDS195PM	PGH186	PSA3020	PSA3052	EDS3096PG
EDS195PM	PGH186-13	PSA3020	PSA3052	EDS3096PG-13
EDS195PM	–	PSA3320	PSA3352	EDS3091
EDS195PM	PGH183	PSA3320	PSA3352	EDS3091PG
EDS195PM	PGH183-13	PSA3320	PSA3352	EDS3091PG-13
EDS195PM	PGH183	PSA3320	PSA3352	EDS3092PG
	PGH185	PSA3020	PSA3052	
EDS195PM	PGH186	–	2 x PSA3052	EDS3096PV

Technical data EDS309…system

The technical data listed in this chapter apply to the components: PGH18…, EDS195PM, AGH185.

Environment/EMC	
EMC	IEC 61326-2-4
Operating temperature	-10…+55 °C
Classification of climatic conditions acc. to IEC 60721 (except condensation and formation of ice)**:**	
Stationary use (IEC 60721-3-3)	3K22
Transport (IEC 60721-3-2)	2K11
Storage (IEC 60721-3-1)	1K22
Classification of mechanical conditions acc. to IEC 60721	
Stationary use (IEC 60721-3-3)	3M11
Transport (IEC 60721-3-2)	2M4
Long-time storage (IEC 60721-3-1)	1M12

Other	
Operating mode	continuous operation
Position of normal use	any
Weight EDS309…	≤ 7000 g
Weight EDS309… with PSA3165	≤ 8500 g
Weight EDS3092	≤ 9000 g
Dimensions WxHxD	430 x 340 x 155 mm
Documentation number	D00012

Technical data PGH18…

Insulation coordination acc. to IEC 60664-1/ IEC 60664-3	
Rated insulation voltage	AC 500 V
Rated impulse withstand voltage/pollution degree	4 kV/3
Nominal system voltage U_n	
PGH183	AC 20…265 V 42…460 Hz, DC 20…308 V
PGH185	3AC/AC 20…575 V 42…460 Hz, DC 20…504 V
PGH186	3AC/AC 0…575 V 42…460 Hz, DC 0…504 V
Voltage supply	
Supply voltage U_s	AC 230 V/50…60 Hz
Operating range of U_s	0.85…1.15 x U_s
Supply voltage U_s version -13	AC 90…132 V/50…60 Hz
PGH183, PGH185:	
Power consumption	≤ 3 VA
PGH186:	
Power consumption	≤ 6 VA
Locating current	
PGH183	
Test current, selectable, max.	1/2.5 mA
PGH185/186	
Locating current I_L, selectable, max.	10/25 mA
PGH183/185/186	
Clock pulse	2 s
Idle time	4 s
Measuring voltage U_m	
PGH186	DC 50 V
Other	
Degree of protection, internal components DIN EN 60529 (VDE 0470-1)	IP40
Enclosure material	ABS plastic
Flammability class	UL94 V-0
Weight	≤ 700 g
Dimensions WxHxD	160 x 148 x 81 mm

Technical data EDS195PM

Insulation coordination acc. to IEC 60664-1/IEC 60664-3	
Rated insulation voltage	50 V
Rated impulse withstand voltage/pollution degree	0.8 kV/3
Voltage supply	
Supply voltage U_s	accumulators, batteries or USB power supply unit
Accumulators	3 x NiMh ≥ 2000 mAh
Hours of operation (without display illumination)	≥ 150 h
Charging time	≤ 5 h
Size	AA R6
Batteries	3 x LR6 AA – 1.5 V
USB power supply unit:	
Primary:	100…240 V, 50…60 Hz
Secondary:	DC 5 V, ±10 %
Power consumption	≤ 0.5 W
Measuring circuit insulation fault location	
Nominal system voltage	conductors uninsulated, including measuring clamp up to 600 V
Rated frequency	DC, 42…2000 Hz
Main circuit (I_{Lmax} = 50 mA)	
Measuring range	2 mA…50 mA
Measuring clamps	PSA3020, PSA3052, PSA3165
Response value $I_{\Delta L}$, adjustable	2…10 mA (5 mA)*
Relative uncertainty	±30 %/±2 mA of the reference value
Control circuit (I_{Lmax} = 5 mA)	
Measuring range	0.2 mA…5 mA
Measuring clamps	PSA3320, PSA3352
Response value $I_{\Delta L}$, adjustable	0.2…1.0 mA (0.5 mA)*
Relative uncertainty 0.2…0.9 mA	±30 %/±0.2 mA of the reference value
Relative uncertainty 1…5 mA	±30 %/±2 mA of the reference value
Measuring circuit residual current	
with measuring clamps	PSA3020, PSA3052, PSA3165
Measuring range	5 mA…10 A (crest factor up to 3)
Response value $I_{\Delta L}$, adjustable	10 mA…10 A (100 mA)*
with measuring clamps	PSA3320, PSA3352
Measuring range	2 mA…2 A (crest factor up to 3)
Response value $I_{\Delta L}$, adjustable	5 mA…1 A (100 mA)*
Frequency range	42…1000 Hz
Relative uncertainty, 42…60 Hz	±5 %
Relative uncertainty, 61…1000 Hz	±20 %
Hysteresis	20 %
Harmonics, adjustable	1st to 8th harmonic component
Connection	
Type of connection measuring clamp	BNC plug
Power supply unit (DC 5 V)	µUSB plug
Indication	
LCD	3 x 16 characters, selectable illumination
LED	Alarm
Other	
Degree of protection, internal components DIN EN 60529 (VDE 0470-1)	IP40
Protection class acc. to IEC 60947-1, DIN EN 60947-1 (VDE 0660-100)	Class III
Enclosure material	ABS plastic
Flammability class	UL94 V-0
Dimensions WxHxD	84 x 197 x 30 mm
Weight	≤ 350 g

( )* = Factory settings

Technical data measuring clamps

Electrical safety	
Standard	IEC 61010-2-030
Pollution degree	2
Installation category	III
Operating voltage	600 V
Nominal insulation voltage	AC 600 V CAT III resp. AC 300 V CAT IV

Transmission ratio	
PSA30…	10 A/10 mA
PSA33…	1 A/0.1 mA
PSA3165	10 A/10 mA

Other		
Degree of protection, internal components DIN EN 60529 (VDE 0470-1)		IP40
Protection class acc. to IEC 60947-1, DIN EN 60947-1 (VDE 0660-100)		Class III
Test port		BNC plug
Dimensions PSA3052/3352		216 x 111 x 45 mm
Dimensions PSA3020/3320		135 x 65 x 30 mm
Dimensions PSA3165		285 x 179 x 45 mm
Permissible cable diameter PSA3052/3352		52 mm
Permissible cable diameter PSA3052/3320		20 mm
Permissible cable diameter PSA3165		115 mm
Weight	PSA3052/3352	≤ 700 g
	PSA3020/3320	≤ 300 g
	PSA3165	≤ 1300 g

Technical data AGE185

Insulation coordination acc. to IEC 60664-1	
Rated insulation voltage	AC 1000 V
Rated impulse voltage/pollution degree	4 kV/3
Nominal system voltage U_n	3AC, AC 500…790 V, DC 400…960 V/42…460 Hz

Other	
Degree of protection, internal components DIN EN 60529 (VDE 0470-1)	IP30
Type of connection/cable:	safety plug with green-yellow connecting wire 1 mm²
Weight	≤ 400 g
Dimensions W x H x D	84 x 197 x 30 mm
Weight	≤ 200 g
Dimensions W x H x D	88.5 x 42 x 21 mm

Dimension diagram PSA3020/3320 (dimensions in mm)

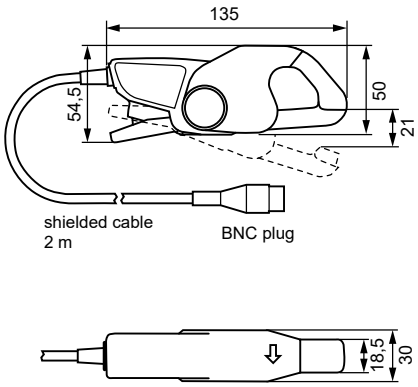

Dimension diagram PSA3052/3352 (dimensions in mm)

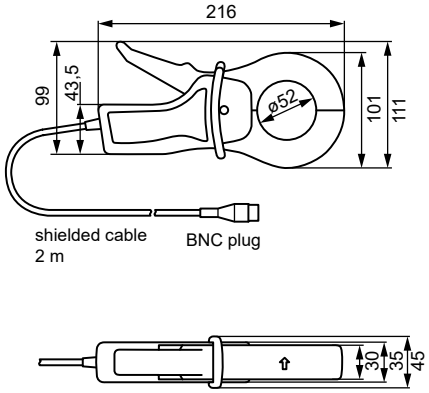

Dimension diagram PSA3165 (dimensions in mm)

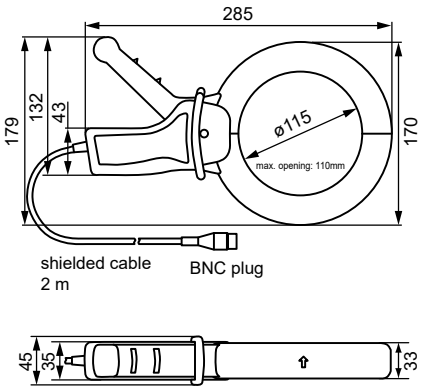

Dimension diagram aluminium case(dimensions in mm)

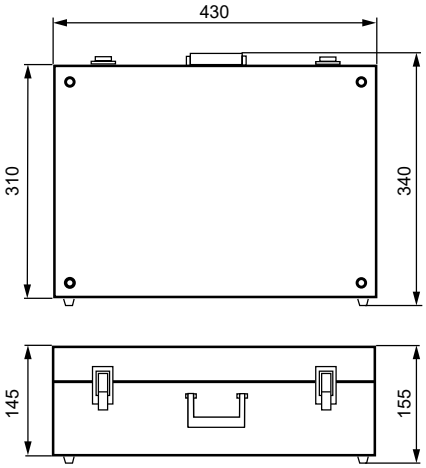

Operating elements PGH18…

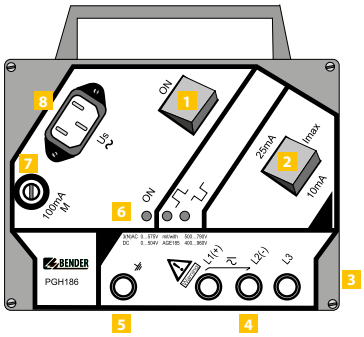

1. On/Off switch “ON”, activates the test current
2. Selector switch for the maximum locating current 25/10 mA or 2.5/1 mA
3. Not visible: Magnetic adhesive strip at the back of the enclosure for fixing to metal parts (e.g. switchboard cabinet)
4. 3 sockets for system coupling
5. Socket for PE connection
6. LED indicators:
   “ON” Power On LED
   Indication of the positive clock pulse of the locating current
   Indication of the negative clock pulse of the locating current
7. Microfuse 100 mA
8. Panel plug for supply voltage

Operating elements EDS195PM

1. Micro USB connection for charging the device’s rechargeable battery
2. BNC connection for the measuring clamp
3. LC display, backlit, 3 lines à 16 characters
4. LED “ALARM”, lights when the response value is exceeded
5. Button for the selection of the operating mode :
   $I_{\Delta S}$ = insulation fault location in IT systems (EDS mode)
   $I_{\Delta n}$ = residual current measurement in TN-S systems in (RCM mode)
6. Button for transformer selection

	for I_{Tmax} = 50 mA:	for I_{Tmax} = 5 mA:
P20	= PSA3020	= PSA3320
P52	= PSA3052	= PSA3352
P165	= PSA3165	----------
W/WR	= CTAC…/WR…	= CTAC…
WS	= WS…	= CTAC…

7. “INFO” button: – device type – software version – current response values $I_{\Delta S}$ and $I_{\Delta n}$ – setup status
   ESC button: to exit the menu function without changing parameters
8. “MENU” button: to toggle between the standard display and the menu selection
9. On-Off button
10. “HOLD” button: to store the currently indicated measured value
    Arrow up button: Parameter changes, scroll
11. “RESET” button: fault memory acknowledgement
    Arrow down button: Parameter changes, scroll
12. Illumination button: to switch on the display lighting

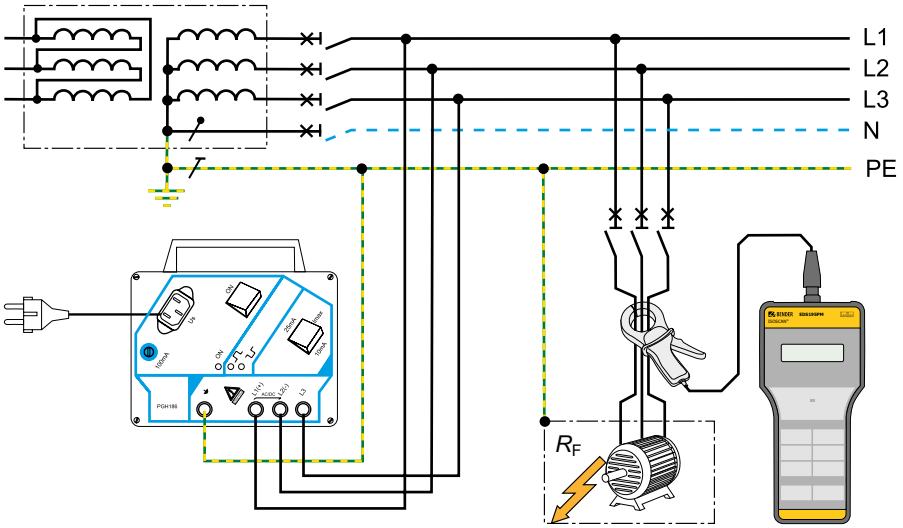

Equipment for insulation fault location EDS3096PG in de-energised systems (IT systems) (Note: TN-S system with all poles disconnected)

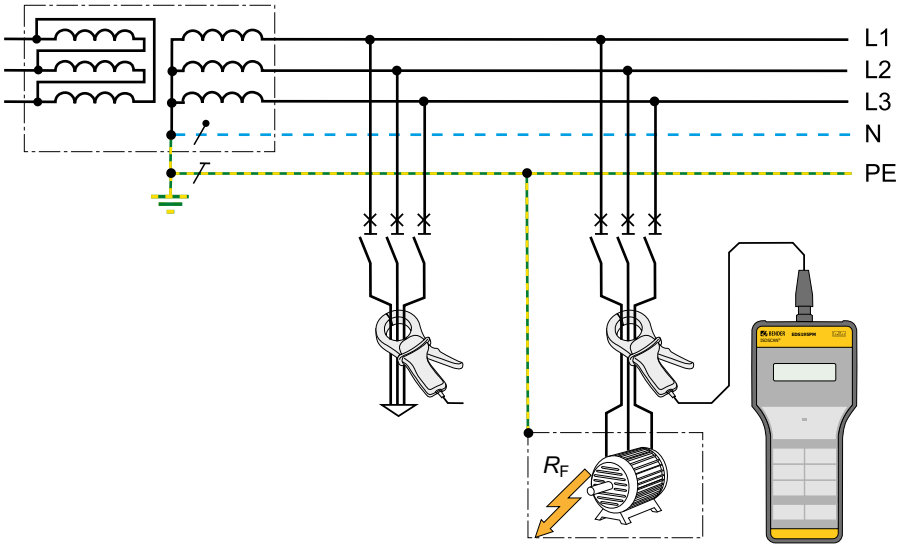

Residual current measurement with EDS309… in earthed systems (TN-S systems)

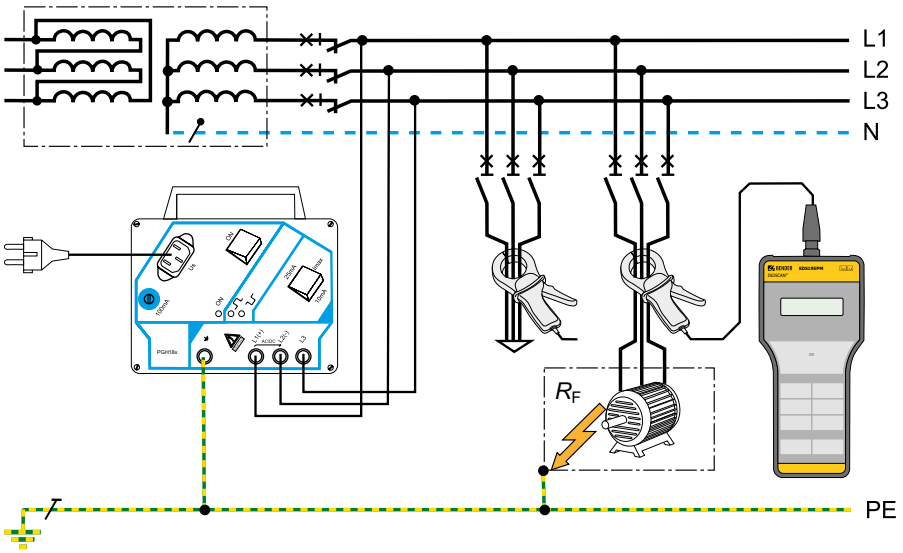

Equipment for insulation fault location EDS3090/3091PG for use in unearthed systems (IT systems) without a permanently installed equipment for insulation fault location

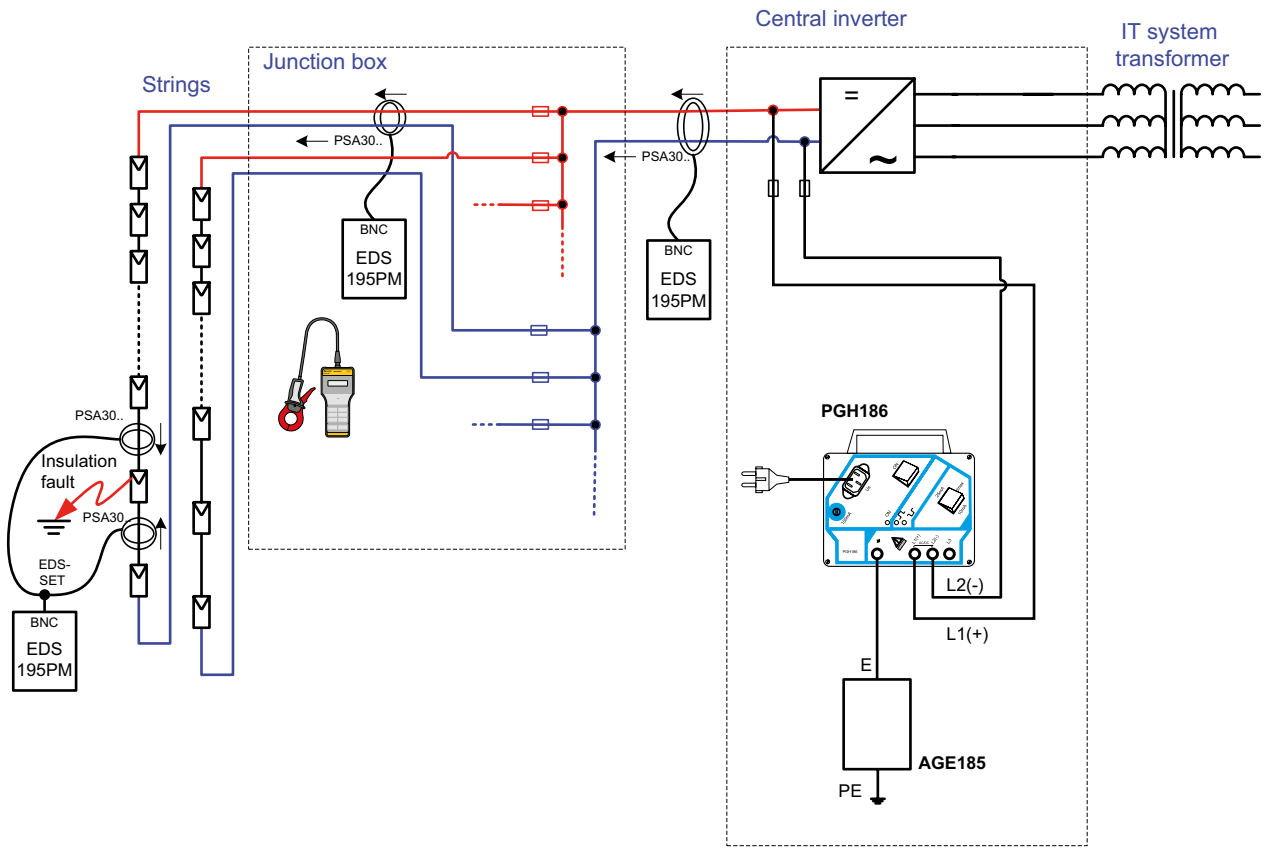

Insulation fault location system EDS3096PV in unearthed photovoltaic systems (IT systems)

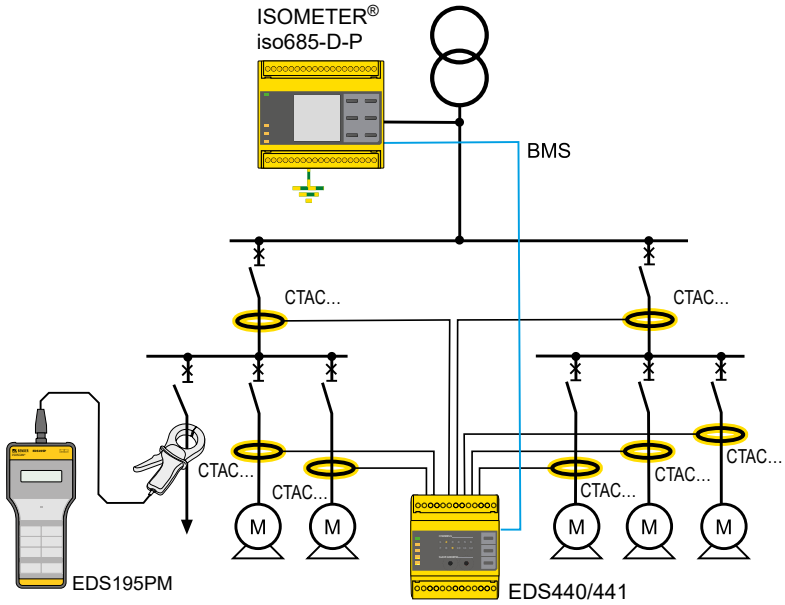

Insulation fault location system EDS3090/3091 in unearthed systems (IT systems) with permanently installed equipment for insulation fault location EDS

Device selection for IT systems with integrated equipment for insulation fault location

Type of distribution system	AC, DC, AC/DC (mixed systems)
Application range	Main circuits or Control circuits

Insulation monitoring device ISOMETER®/Locating current injector PGH

		
Type	**iso685-x-P**	**isoxx1685xP**
Nominal system voltage U_n	AC 0…690 V, DC 0…1000 V	isoLR1685DP: AC 0…690, DC 0…690 V iso1685DP: AC 0…1000 V, DC 0…1500 V
Locating current I_L	1/1.8/2.5/5/10/25/50 mA	1/2.5/5/10/25/50 mA
Response values	1 kΩ…10 MΩ	isoLR1685DP: 20 Ω…100 kΩ iso1685DP: 200 Ω…1 MΩ
LC display	graphic display	graphic display
Alarm relay	2 changeover contacts	3 changeover contacts
Interface/protocol	RS-485 (BS)	RS-485 (BS)
Address range	1…90	1…90

Insulation fault locator

	
Type	**EDS195PM**
LC display	3 x 16 characters
Evaluating current $I_{\Delta L}$	0.2…50 mA
Response value	0.2…1/2…10 mA selectable

Messzangen

Application range	Main circuits			Control circuits	
					
Type	**PSA3020**	**PSA3052**	**PSA3165 (optional)**	**PSA3320**	**PSA3352**
20 mm	✓			✓	
52 mm		✓			✓
115 mm			✓		

Complete systems

Type	**EDS3090**		**EDS3091**
Comprising	Aluminium case, EDS195PM, PSA3020, PSA3052, power supply unit	Aluminium case, EDS195PM, PSA3020, PSA3052, power supply unit	Aluminium case, EDS195PM, PSA3320, PSA3352, power supply unit

Device selection for IT systems without a permanently installed equipment for insulation fault location

Application	Main circuit		Control circuit
	energised	offline	energised
Locating current injector PGH			
			
Nominal system voltage U_n	3AC, AC 20…575 V DC 20…504 V	3AC, AC 0…575 V DC 0…504 V	AC 20…265 V, DC 20…308 V
U_s AC 230 V	PGH185	PGH186	PGH183
U_s AC 90…132 V	PGH185-13	PGH186-13	PGH183-13
Locating current I_L max.	10/25 mA	10/25 mA	1/2.5 mA

Insulation fault locator	
	
Type	**EDS195PM**
LC display	3 x 16 characters
Evaluating current $I_{\Delta L}$	0.2…50 mA
Response value	0.2…1/2…10 mA selectable

Measuring clamps					
					
Type	**PSA3020**	**PSA3052**	**PSA3165 (optional)**	**PSA3320**	**PSA3352**
20 mm	✓			✓	
52 mm		✓			✓
115 mm			✓		

Components EDS309...

			EDS195PM with Accessories					PGH18... with accessories for							Measuring clamps			
Device type	Aluminium case with carrying handle	Operating manual	Insulation fault locator	Clamping connector on 4 mm	Adapter BNC/4mm connector for curr. transform	Adapter BNC-PS2 for WF-CT, optional	Plug power supply for EDS195PM	Locating current injector	Supply cable for PGH18...	Safety measuring cable, black	Safety measuring cable, green/yellow	Safety claw grip, black	Safety claw grip, green/yellow	Coupling device, optional (EDS3096PV only; in the scope of delivery)	Measuring clamps 20 mm	Measuring clamps 52 mm	Measuring clamps 115 mm, optional	EDS-Set, optional
EDS3090	1	1	EDS195PM	1	1	1	1								PSA3020	PSA3052	PSA3165	1
EDS3090PG	1	1	EDS195PM	1	1	1	1	PGH185	1	3	1	3	1	AGE185	PSA3020	PSA3052	PSA3165	1
EDS3090PG-13	1	1	EDS195PM	1	1	1	1	PGH185-13	1	3	1	3	1	AGE185	PSA3020	PSA3052	PSA3165	1
EDS3091	1	1	EDS195PM	1	1	1	1								PSA3320	PSA3352		1
EDS3091PG	1	1	EDS195PM	1	1	1	1	PGH183	1	3	1	3	1		PSA3320	PSA3352		1
EDS3091PG-13	1	1	EDS195PM	1	1	1	1	PGH183-13	1	3	1	3	1		PSA3320	PSA3352		1
EDS3092PG	1	1	EDS195PM	1	1	1	1	PGH183 PGH185	2	6	2	6	2	PSA3320 PSA3020	PSA3352 PSA3052		1	
EDS3096PG	1	1	EDS195PM	1	1	1	1	PGH186	1	3	1	3	1	AGE185	PSA3020	PSA3052	PSA3165	1
EDS3096PG-13	1	1	EDS195PM	1	1	1	1	PGH186-13	1	3	1	3	1	AGE185	PSA3020	PSA3052	PSA3165	1
EDS3096PV	1	1	EDS195PM	–	–	–	1	PGH186	1	3	1	3	1	AGE185		2 x PSA3052		

Coupling device AGE185

AC/DC

Typical applications

- Monitoring of AC IT systems of up to 790 V and DC IT systems of up to 960 V

Further information

For further information refer to our product range on www.bender.de.

Approvals

CE UK CA

Ordering information

Type	Nominal system voltage U_s	Art. No.
AGE185	AC, 3(N)AC 500…790 V / DC 400…960 V	B980305

Wiring diagram

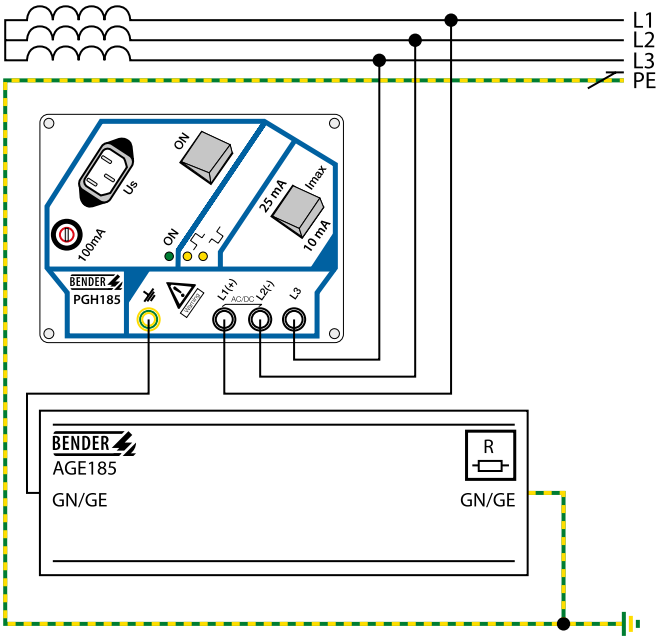

Locating current injector PGH185 and coupling device AGE185

Device overview residual current monitors LINETRAXX®

						
		LINETRAXX® RCM420	LINETRAXX® RCMA420	LINETRAXX® RCMA423	LINETRAXX® SmartDetect RCMS410	LINETRAXX® RCMS460/RCMS490
Catalogue page		164	167	170	173	176
Special applications		–	–	–	–	–
Type of distribution system	TN/TT	✓	✓	✓	✓	✓
	IT	–	–	–	–	–
Residual currents	∼	✓	✓	✓	✓	✓
	⎓	–	✓	✓	✓	✓
Rated frequency range		42…2000 Hz	0…2000 Hz	0…2000 Hz	0…20000 Hz	0…2000 Hz
Number of measuring channels		1	1	1	4	12 (per device) 1080 (per system)
Response value	$I_{\Delta n1}$	50…100 % x $I_{\Delta n2}$	50…100 % x $I_{\Delta n2}$	50…100 % x $I_{\Delta n2}$	10…100 % x $I_{\Delta n}$	10…100 % x $I_{\Delta n2}$ min. 5 mA
	$I_{\Delta n2}$	10 mA…10 A	10…500 mA	30 mA…3 A	6 mA…30 A (Typ A, Typ F) 10 mA…10 A (Typ B, Typ B+)	10 mA…10 A (Type B) 6 mA…20 A (Type A)
Response delay t_{on}		0…10 s	0…10 s	0…10 s	0…10 s	0…99 s
Start-up delay t		0…10 s	0…10 s	0…10 s	0…999 s	0…99 s
Delay on release t_{off}		0…300 s	0…99 s	0…99 s	0…999 s	0…999 s
Operating principle, alarm relays		N/C operation or N/O operation	N/C operation or N/O operation	N/C operation or N/O operation	Multifunctional digital and analogue inputs and outputs	N/C operation or N/O operation
Installation	DIN rail	✓	✓	✓	✓	✓
	Screw mounting	✓	✓	✓	✓	✓
Interfaces	BMS	–	–	–	–	✓
	Modbus	–	–	–	✓	–
	NFC	–	–	–	✓	–
Product details (Products on www.bender.de/en)						

	Type	C. p.	Suitable system components				
Measuring current transformers	CTAC…	342	✓	–	–	✓	✓
	CTUB100	345	–	✓	✓	✓	✓
	WR…S(P)	349	✓	–	–	✓	✓
	CTBS25	354	–	–	–	✓	✓
	WS…	356	✓	–	–	✓	✓
	WF…	360	✓	–	–	✓	✓
RS-485 repeater	DI-1DL	389	–	–	–	–	✓
Power supply units	STEP-PS	381	–	–	–	✓	✓

					
LINETRAXX® RCMS150 series	**LINETRAXX® MRCDB423**	**LINETRAXX® MRCDB300 series**	**LINETRAXX® RCMB300 series**	**LINETRAXX® RCMB330**	**LINETRAXX® RCM410R-24/-2**
183	**186**	**190**	**194**	**198**	**201**
Monitoring of final circuits, DGUV Regulation 3 (German Social Accident Insurance)	Additional protection (MRCD applications)	Additional protection (MRCD applications)	–	–	–
✓	✓	✓	✓	✓	✓
–	–	–	–	–	–
✓	✓	✓	✓	✓	✓
✓	✓	✓	✓	✓	✓
0…1000 Hz	0…2000 Hz	DC…100000 Hz	DC…100000 Hz	DC…100000 Hz	42…70 Hz
6 virtual 12	1	–	–	–	–
50…100 % x $I_{\Delta n2}$	50…100 % von $I_{\Delta n2}$	50…100 % x $I_{\Delta n2}$	50…100 % x $I_{\Delta n2}$	50…100 % x $I_{\Delta n2}$	50…100 % x $I_{\Delta n}$
3…300 mA (Type B) 3…300 mA (DC)	30 mA…3 A	30 mA…3 A	30 mA…3 A	30…500 mA	10 mA…30 A
0…600 s	0…10 s	0 s…60 min	50 ms…60 min	50 ms…60 min	0…10 s
0.5…600 s	1 s	0 s…60 min	0 s…60 min	0 s…60 min	0…999 s
0…600 s	–	0 s…60 min	0 s…60 min	0 s…60 min	0…999 s
–	N/C operation	N/C operation or N/O operation	N/C operation or N/O operation	–	N/C operation or N/O operation
✓	✓	partly	partly	✓	✓
✓	✓	✓	✓	✓	✓
✓	–	–	–	–	–
RTU	–	RTU	RTU	RTU	RTU
–	–	–	–	–	✓

Suitable system components

–	–	–	–	–	✓
–	✓	–	–	–	–
–	–	–	–	–	✓
–	–	–	–	–	–
–	–	–	–	–	✓
–	–	–	–	–	✓
✓	–	–	–	–	–
✓	–	✓	✓	✓	✓

Device overview residual current monitors LINETRAXX®

		RCMB131-01	RCMB131-02	RCMB132-01	RCMB104	RDC104-4
						
Catalogue page		204	207	210	213	216
Special applications		Monitoring of final circuits, integration in power distribution units (PDUs)	Monitoring of final circuits, integration in power distribution units (PDUs)	Monitoring of final circuits, integration in power distribution units (PDUs)	Electric vehicle charging systems	Electric vehicle charging systems
Type of distribution system	TN/TT	✓	✓	✓	✓	✓
	IT	–	–	–	–	–
Residual currents	∼	✓	✓	✓	✓	✓
	⎓	✓	✓	✓	✓	✓
Rated frequency range		DC…2000 Hz	DC…2000 Hz	DC…2000 Hz	0…2000 Hz	0…2000 Hz
Number of measuring channels		–	–	–	–	–
Response value	$I_{\Delta n1}$	3,5…100 mA (DC)	3,5…100 mA (DC)	3,5…100 mA (DC)	DC 6 mA (RCMB104-1) r.m.s. 5 mA (RCMB104-2)	–
	$I_{\Delta n2}$	3,5…100 mA (r.m.s.)	3,5…100 mA (r.m.s.)	3,5…100 mA (r.m.s.)	r.m.s. 30 mA (RCMB104-1) r.m.s. 20 mA (RCMB104-2)	DC 6 mA
Response delay t_{on}		–	–	–	–	–
Start-up delay t		–	–	–	–	–
Delay on release t_{off}		–	–	–	–	–
Operating principle, alarm relays		–	–	–	–	–
Installation	DIN rail	✓	✓	✓	–	–
	Screw mounting	✓	✓	✓	–	–
Interfaces	BMS	–	–	–	–	–
	Modbus	RTU	–	RTU	–	–
	NFC	–	–	–	–	–
Product details (Products on www.bender.de/en)						

	Type	C. p.	Suitable system components				
Measuring current transformers	CTAC…	342	–	–	–	–	–
	CTUB100	345	–	–	–	–	–
	WR…S(P)	349	–	–	–	–	–
	CTBS25	354	–	–	–	–	–
	WS…	356	–	–	–	–	–
	WF…	360	–	–	–	–	–
RS-485 repeater	DI-1DL	389	–	–	–	–	–
Power supply units	STEP-PS	381	✓	✓	✓	–	–

LINETRAXX® RCMB42…
219
Fault current monitoring of electric vehicle AC charging stations
✓
–
✓
✓
0…2000 Hz
1 (RCMB422EC) or 2 (RCMB420EC)
DC 6 mA
RMS 30 mA
–
–
2 s (after reset)
N/C operation
✓
✓
–
–
–
–
–
–
–
–
–
–
–

LINETRAXX® RCM420

Residual current monitor for AC current monitoring in TN and TT systems

Typical applications

- Residual current monitoring in earthed 2, 3 or 4-conductor systems
- Current monitoring of, in the normal case, de-energised single conductors
- Socket-outlet circuits for devices which are operated unattended for a long time and which may not fail
- Alarm systems, safety devices
- Air conditioning systems, EDP systems
- Cooling equipment with valuable frozen goods
- Canteen kitchens
- Monitoring of earthed power supplies for stray currents
- Impact on N conductors
- Trace heating systems

Device features

- AC and pulsed DC sensitive residual current monitor Type A according to DIN EN 62020
- r.m.s. value measurement (AC)
- Two separately adjustable response values
- Frequency range 42…2000 Hz
- Start-up delay, response delay and delay on release
- Restart function
- Digital measured value display via LC display
- Measured value memory for operating value
- CT connection monitoring
- LEDs: Power On, Alarm 1, Alarm 2
- Internal/external test/reset button
- Two separate alarm relays (one changeover contact each)
- N/O or N/C operation and fault memory behaviour selectable
- Password protection for device setting
- Device self monitoring
- Sealable transparent cover
- Two-module enclosure (36 mm)
- RoHS compliant
- Push-wire terminal (two terminals per connection)

Approvals

UL508 – Standard for Industrial Control Equipment CSA C22.2 No. 14-13 – Industrial Control Equipment
UL File number E173157 (for all RCM420)

UL1053 – Standard for Safety Ground-Fault Sensing and Relaying Equipment
UL File number E478610
(Only for B74014002 and B94014002 and solely in combination with Marina Guard MG-1.3 and MG-T.3.
If necessary, other applications are to be evaluated separately after consulting the manufacturer.)

Further information

For further information refer to our product range on www.bender.de.

Ordering information

Type	Supply voltage [1] U_S	Art. No.	
		Screw-type terminal	Push-wire terminal
RCM420-D-1	AC 16…72 V, 40…460 Hz / DC 9,6…94 V	B94014001	B74014001
RCM420-D-2	AC 70…300 V, 40…460 Hz / DC 70…300 V	B94014002	B74014002

[1] Absolute values

Accessories

Description	Art. No.
Mounting clip for screw mounting (1 piece per device)	B 9806 0008

Suitable system components

Description	Type of construction	Type	Art. No.	Page
Measuring current transformers	circular	CTAC…	B981100…	**342**
	rectangular	WR…S(P)	B9117…	**349**
	split-core	WS…	B980806…	**356**
	flexible	WF…	B780802…	**360**

Insulation coordination acc. to IEC 60664-1/IEC 60664-3

RCM420-D-1

Rated insulation voltage	100 V
Overvoltage category/pollution degree	III/3
Rated impulse voltage	2,5 kV

RCM420-D-2

Rated insulation voltage	250 V
Overvoltage category/pollution degree	III/3
Rated impulse voltage	4 kV

Supply voltage

RCM420-D-1

Supply voltage range U_s	AC 24…60 V/DC 24…78 V
Operating range U_s	AC 16…72 V/DC 9.6…94 V
Frequency range U_s	DC, 42…460 Hz

RCM420-D-2

Supply voltage range U_s	AC/DC 100…250 V
Operating range U_s	AC/DC 70…300 V
Frequency range U_s	42…460 Hz

Protective separation (reinforced insulation) between	(A1, A2) - (k/l, T/R) - (11, 12, 14) - (21, 22, 24)
Voltage test according to IEC 61010-1	2.21 kV
Power consumption	≤ 4 VA

Measuring circuit

External measuring current transformer type	CTAC…, WR…, WS…
Load	68 Ω
Rated insulation voltage (measuring current transformer)	800 V
Operating characteristic acc. to DIN EN 62020	type A
Frequency range	42…2000 Hz
Measuring range	3 mA…16 A
Relative uncertainty	0…-20 %
Operating uncertainty	0…30 %

Response values

Rated residual operating current $I_{\Delta n1}$ (prewarning, AL1)	50…100 % x $I_{\Delta n2}$, (50 %)*
Rated residual operating current $I_{\Delta n2}$ (Alarm, AL2)	10 mA…10 A (30 mA)*
Hysteresis	10…25 % (15%)*

Specified time

Starting delay t	0…10 s (0.5 s)*
Response delay t_{on2} (Alarm)	0…10 s (0 s)*
Response delay t_{on1} (prewarning)	0…10 s (1 s)*
Delay on release t_{off}	0…300 s (1 s)*
Operating time t_{ae} at $I_{\Delta n} = 1 \times I_{\Delta n1/2}$	≤ 180 ms
Operating time t_{ae} at $I_{\Delta n} = 5 \times I_{\Delta n1/2}$	≤ 30 ms
Response time t_{an}	$t_{an} = t_{ae} + t_{on1/2}$
Recovery time t_b	≤ 300 ms
Number of reload cycles	0…100 (0)*

Cable lengths for measuring current transformers

Single wire ≥ 0.75 mm²	0…1 m
Single wire, twisted ≥ 0.75 mm²	0…10 m
Shielded cable ≥ 0.75 mm²	0…40 m
Recommended cable (shielded, shield on one side connected to terminal l of the RCM420, not connected to earth)	J-Y(St)Y min. 2x0.8
Connection	screw terminals

Displays, memory

Display range, measured value	3 mA…16 A
Error of indication	± 15 %/± 2 digit
Measured-value memory for alarm value	data record measured values
Password	off/0…999 (OFF)*
Fault memory alarm relay	on/off (off)*

Inputs/outputs

Cable length for external test/reset button	0…10 m

Switching elements

Number of switching elements	2 x 1 changeover contact
Operating principle	N/C operation/ N/O operation (N/O operation)*
Electrical service life under rated operating conditions	10000 switching operations

Contact data acc. to IEC 60947-5-1:

Utilization category	AC-13	AC-14	DC-12	DC-12	DC-12
Rated operational voltage	230 V	230 V	24 V	110 V	220 V
Rated operational voltage UL	200 V	200 V	24 V	110 V	200 V
Rated operational current	5 A	3 A	1 A	0.2 A	0.1 A
Minimum contact load (relay manufacturer's reference)					10 mA/5 V DC

Environment/EMC

EMC	DIN EN 62020
Operating temperature	-25…+55 °C

Classification of climatic conditions acc. to IEC 60721
(related to temperature and relative humidity)

Stationary use (IEC 60721-3-3)	3K22
Transportation (IEC 60721-3-2)	2K11
Storage (IEC 60721-3-1)	1K22

Classification of mechanical conditions acc. to IEC 60721

Stationary use (IEC 60721-3-3)	3M11
Transportation (IEC 60721-3-2)	2M4
Storage (IEC 60721-3-1)	1M12

Connection

For UL application:
Use copper conductors only!
Use 60/70 °C copper conductors only!

Connection type	screw-type terminal or push-wire terminal

Screw-type terminal

Connection properties:	
rigid/flexible	0.2…4/0.2…2.5 mm² (AWG 24-12)
Two conductors with the same cross section:	
rigid/flexible	0.2…1.5/0.2…1.5 mm²
Stripping length	8…9 mm
Tightening torque, terminal screws	0.5…0.6 Nm

Push-wire terminals

Connection properties:	
rigid	0.2…2.5 mm² (AWG 24-14)
flexible without ferrules	0.75…2.5 mm² (AWG 19-14)
flexible with ferrules	0.2…1.5 mm² (AWG 24-16)
Stripping length	10 mm
Opening force	50 N
Test opening, diameter	2.1 mm

Other

Operating mode	continuous operation
Position of normal use	any
Protection class, internal components (DIN EN 60529)	IP30
Degree of protection, terminals (DIN EN 60529	IP20
Enclosure material	polycarbonate
Flammability class	UL94V-0
DIN rail mounting acc. to	IEC 60715
Screw mounting	2 x M4 with mounting clip
Documentation number	D00057
Weight	≤ 150 g

( )* = factory setting

Dimension diagram (dimensions in mm)

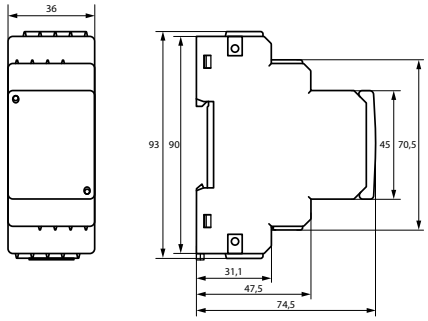

Wiring diagram

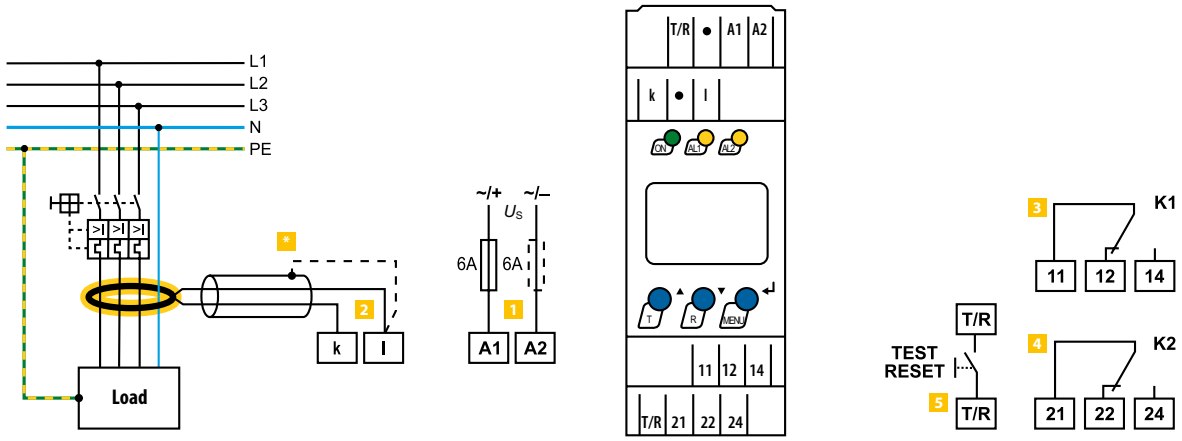

1	**A1, A2**	Supply voltage U_S see ordering information, 6 A fuse recommended
2	**k, l**	Connection of the external measuring current transformer
3	**11, 12, 14**	Alarm relay "K1": configurable for alarm $I_{\Delta n1}$/$I_{\Delta n2}$/TEST/ERROR
4	**21, 22, 24**	Alarm relay "K2": configurable for alarm $I_{\Delta n1}$/$I_{\Delta n2}$/TEST/ERROR
5	**T/R**	Combined test and reset button "T/R" short-time pressing (< 1.5 s) = RESET long-time pressing (> 1.5 s) = TEST

* when a shielded cable is used

Do not route the PE conductor through the measuring current transformer!

LINETRAXX® RCMA420

Residual current monitor for monitoring AC, DC and pulsed DC currents in TN and TT systems

Typical applications

- AC/DC sensitive residual current monitoring in earthed two, three or four conductor systems (TN and TT systems)
- Monitoring of variable-speed drives, UPS systems, construction site equipment, printing machines, battery systems, laboratory equipment, wood working machines, MF welding systems, furniture industry, medical electrical equipment, etc.
- AC/DC sensitive current monitoring of, in the normal case, de-energised single conductors (e.g. N and PE conductors)

Approvals

Device features

- AC/DC sensitive residual current monitor Type B acc. to DIN EN 62020 and IEC/TR 60755
- r.m.s. value measurement (AC+DC)
- Two separately adjustable response values 10…500 mA
- Frequency range 0…2000 Hz
- Start-up delay, response delay and delay on release
- Digital measured value display via LC display
- Measured value memory for operating value
- CT connection monitoring
- LEDs: Power On, Alarm 1, Alarm 2
- Internal/external test/reset button
- Two separate alarm relays (one changeover contact each)
- N/O or N/C operation and fault memory selectable
- Continuous self monitoring
- Multi-functional LC display
- Password protection for device settings
- Sealable transparent cover
- Two-module enclosure (36 mm)
- RoHS compliant

Further information

For further information refer to our product range on www.bender.de.

Ordering information

Type	Supply voltage [1] U_s	Art. No.	
		Screw-type terminal	Push-wire terminal
RCMA420-D-1	AC 16…72 V, 42…460 Hz / DC 9,6…94 V	B94043001	B74043001
RCMA420-D-2	AC 70…300 V, 42…460 Hz / DC 70…300 V	B94043002	B74043002

[1] Absolute values

Accessories

Description	Art. No.
Mounting clip for screw mounting (1 piece per device)	B 9806 0008

Suitable system components

Description	Type of construction	Type	Art. No.	Page
Measuring current transformers	circular	CTUB100	B781200…	**345**
Connecting cables for Measunging current transformers	–	CTX…	B9811008…	**345**

Insulation coordination acc. to IEC 60664-1/IEC 60664-3

RCMA420-D-1:

Rated insulation voltage	100 V
Overvoltage category/pollution degree	III/3
Rated impulse voltage	2.5 kV/3

RCMA420-D-2:

Rated insulation voltage	250 V
Overvoltage category/pollution degree	III/3
Rated impulse voltage	4 kV

Supply voltage

RCMA420-D-1:

Supply voltage range U_s	AC 24…60 V/DC 24…78 V
Operating range U_s	AC 16…72 V/DC 9.6…94 V
Frequency range U_s	DC, 42…460 Hz

RCMA420-D-2:

Supply voltage range U_s	AC/DC 100…250 V
Operating range U_s	AC/DC 70…300 V
Frequency range U_s	DC, 42…460 Hz
Protective separation (reinforced insulation) between	(A1, A2) - (k/l, T/R) - (11, 12, 14) - (21, 22, 24)
Voltage test according to IEC 61010-1	2.21 kV
Power consumption	≤ 6.5 VA

Measuring circuit

External measuring current transformer	CTUB101-CTBC20…210(P)
Rated insulation voltage (measuring current transformer)	800 V
Operating characteristic acc. to DIN EN 62020	type B
Frequency range	0…2000 Hz
Measuring range AC	0…1.5 A
Measuring range DC	0…600 mA
Relative uncertainty for f	
≤ 2 Hz	0…-35 %
> 2 …<16 Hz	-35…+100 %
≥ 16 … ≤ 1000 Hz	0…-35 %
> 1000 …≤ 2000Hz	± 35 %
Operating uncertainty	±17.5 %

Response values

Rated residual operating current $I_{\Delta n1}$ (prewarning, AL1)	50…100 % x $I_{\Delta n2}$, (50 %)*
Rated residual operating current $I_{\Delta n2}$ (Alarm, AL2)	10…500 mA (30 mA)*
Hysteresis	10…25 % (15%)*

Specified times

Starting delay t	0…10 s (0.5 s)*
Response delay t_{on1} (prewarning)	0…10 s (1 s)*
Response delay t_{on2} (alarm)	0…10 s (0 s)*
Delay on release t_{off}	0…99 s (1 s)*
Operating time t_{ae} at $I_{\Delta n} = 1 \times I_{\Delta n1/2}$	≤ 180 ms
Operating time t_{ae} at $I_{\Delta n} = 5 \times I_{\Delta n1/2}$	≤ 30 ms
Response time t_{an}	$t_{an} = t_{ae} + t_{on1/2}$
Recovery time t_b	≤ 300 ms

Displays, memory

Display range, measured value AC	0…1.5 A
Display range, measured value DC	0…600 mA
Error of indication	±17.5 %/± 2 digit
Measured-value memory for alarm value	data record measured values
Password	off/0…999 (off)*
Fault memory alarm relay	on/off (on)*

Inputs/outputs

Cable length for external test/reset button	0…10 m

Cable lengths for measuring current transformers

Connection CTX…	1 m/2.5 m/5 m/10 m
or alternatively: single wire 6 x 0.75 mm²	0…10 m

Switching elements

Number of switching elements	2 x 1 changeover contact
Operating principle	N/C operation/N/O operation (N/C operation)*
Electrical service life under rated operating conditions	10000 switching operations

Contact data acc. to IEC 60947-5-1

Utilization category	AC-13	AC-14	DC-12	DC-12	DC-12
Rated operational voltage	230 V	230 V	24 V	110 V	220 V
Rated operational voltage UL	200 V	200 V	24 V	110 V	200 V
Rated operational current	5 A	3 A	1 A	0.2 A	0.1 A
Minimum contact load (relay manufacturer's reference)					10 mA/5 V DC

Environment/EMC

EMC	DIN EN 62020
Operating temperature	-25…+55 °C

Classification of climatic conditions acc. to IEC 60721 (related to temperature and relative humidity)**:**

Stationary use (IEC 60721-3-3)	3K22
Transportation (IEC 60721-3-2)	2K11
Storage (IEC 60721-3-1)	1K22

Classification of mechanical conditions acc. to IEC 60721:

Stationary use (IEC 60721-3-3)	3M11
Transportation (IEC 60721-3-2)	2M4
Storage (IEC 60721-3-1)	1M12

Connection

For UL applications:
use 60°C/70°C copper conductors only

Connection type	screw-type terminal or push-wire terminal

Screw-type terminal

Connection properties:	
rigid/flexible	0.2…4/0.2…2.5 mm² (AWG 24-12)
Two conductors with the same cross section:	
rigid/flexible	0.2…1.5/0.2…1.5 mm²
Stripping length	8…9 mm
Tightening torque, terminal screws	0.5…0.6 Nm

Push-wire terminals

Connection properties:	
rigid	0.2…2.5 mm² (AWG 24-14)
flexible without ferrules	0.75…2.5 mm² (AWG 19-14)
flexible with ferrules	0.2…1.5 mm² (AWG 24-16)
Stripping length	10 mm
Opening force	50 N
Test opening, diameter	2.1 mm

Other

Operating mode	continuous operation
Position of normal use	display-oriented
Degree of protection, internal components (IEC 60529)	IP30
Degree of protection, terminals (IEC 60529)	IP20
Enclosure material	polycarbonate
Flammability class	UL94V-0
DIN rail mounting acc. to	IEC 60715
Screw fixing	2 x M4 with mounting clip
Documentation number	D00059
Weight	≤ 150 g

( )* = factory setting

Dimension diagram (dimensions in mm)

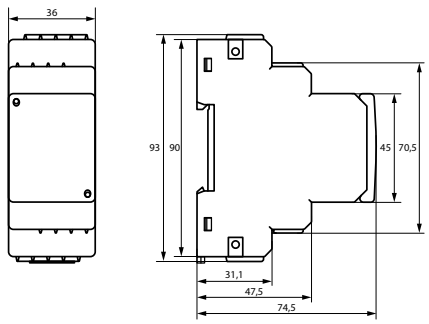

Wiring diagram

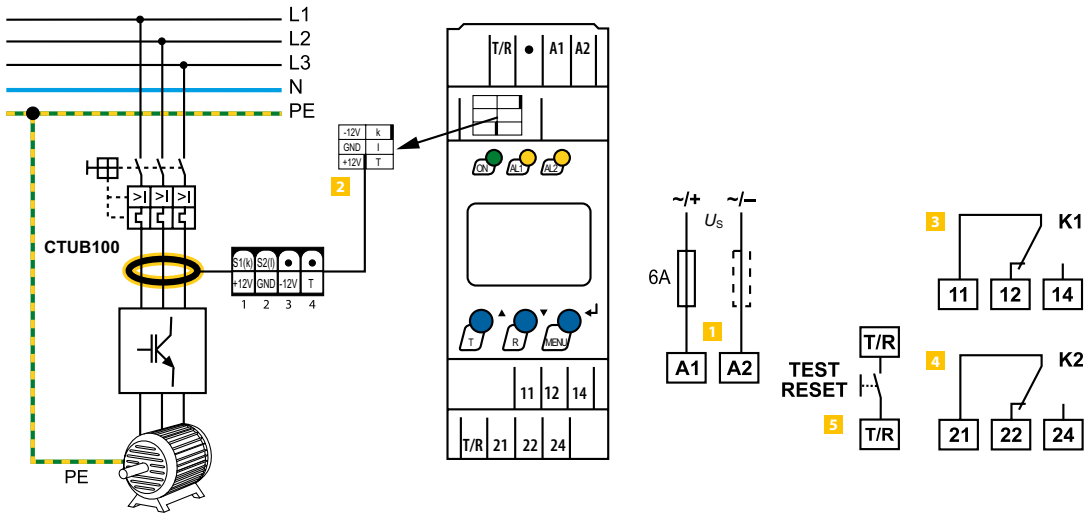

1	**A1, A2**	Supply voltage U_S see ordering information, 6 A fuse recommended
2		Connector for the external CTUB10x-CTBC20…CTUB10x-CTBC60 series measuring current transformer
3	**11, 12, 14**	Alarm relay "K1": $I_{\Delta n1}$ (prewarning)
4	**21, 22, 24**	Alarm relay "K2": alarm $I_{\Delta n2}$ (alarm)
5	**T/R**	Combined test and reset button "T/R" short-time pressing (< 1.5 s) = RESET long-time pressing (> 1.5 s) = TEST

Do not route the PE conductor through the measuring current transformer!

Connection of measuring current transformers

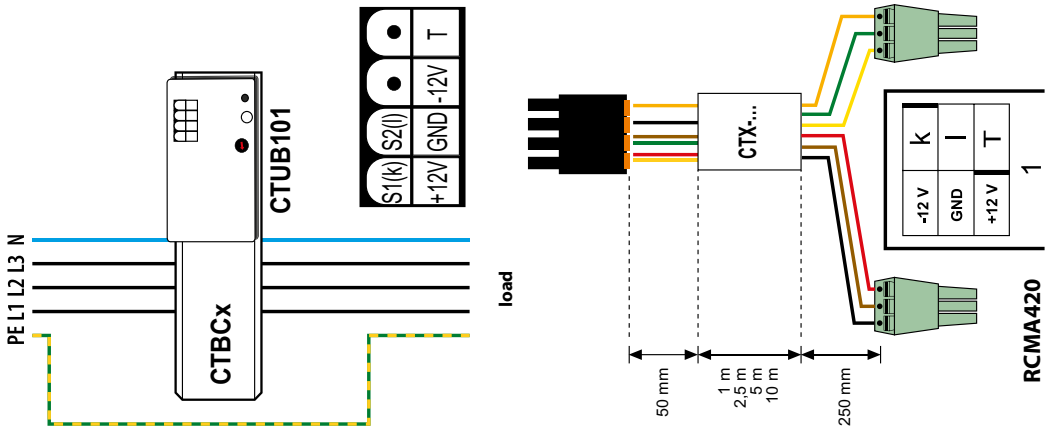

Connection to the RCMA423 residual current monitor using the CTX-… connecting cable.
Colour coding for CTX…: k = yellow, I = green, -12 V = black, GND = brown, +12 V = red, Test (T) = orange

LINETRAXX® RCMA423

Residual current monitor for monitoring AC, DC and pulsed DC currents in TN-and TT systems

Typical applications

- AC/DC sensitive residual current monitoring in earthed two, three or four conductor systems (TN and TT systems)
- Monitoring of variable-speed drives, UPS systems, construction site equipment, printing machines, battery systems, laboratory equipment, wood working machines, MF welding systems, furniture industry, medical electrical equipment, etc.
- AC/DC sensitive current monitoring of, in the normal case, de-energised single conductors (e.g. N conductors)

Approvals

Device features

- AC/DC sensitive residual current monitor Type B acc. to DIN EN 62020 and IEC/TR 60755
- r.m.s. value measurement (AC+DC)
- Two separately adjustable response values 30…3 A
- Frequency range 0…2000 Hz
- Start-up delay, response delay and delay on release
- Digital measured value display via LC display
- Measured value memory for operating value
- CT connection monitoring
- LEDs: Power On, Alarm 1, Alarm 2
- Internal/external test/reset button
- Two separate alarm relays (one changeover contact each)
- N/O or N/C operation and fault memory selectable
- Continuous self monitoring
- Multi-functional LC display
- Password protection for device settings
- Sealable transparent cover
- Two-module enclosure (36 mm)

Further information

For further information refer to our product range on www.bender.de.

Ordering information

Type	Supply voltage[1] U_s	Art. No.	
		Screw-type terminal	Push-wire terminal
RCMA423-D-1	AC 16…72 V, 42…460 Hz / DC 9.6…94 V	B94043023	B74043023
RCMA423-D-2	AC 70…300 V, 42…460 Hz / DC 70…300 V	B94043025	B74043025

[1] Absolute values

Accessories

Description	Art. No.
Mounting clip for screw mounting (1 piece per device)	B 9806 0008

Suitable system components

Description	Type of construction	Type	Art. No.	Page
Measuring current transformers	circular	CTUB100	B781200…	**345**
Connecting cables for Measunging current transformers	–	CTX…	B9811008…	**345**

Insulation coordination acc. to IEC 60664-1/IEC 60664-3

RCMA423-D-1:	
Rated insulation voltage	100 V
Overvoltage category/pollution degree	III/3
Rated impulse voltage	2.5 kV
RCMA423-D-2:	
Rated insulation voltage	250 V
Overvoltage category/pollution degree	III/3
Rated impulse voltage/pollution degree	4 kV

Supply voltage

RCMA423-D-1:	
Supply voltage range U_S	AC 24…60 V/DC 24…78 V
Operating range U_S	AC 16…72 V/DC 9.6…94 V
Frequency range U_S	DC, 42…460 Hz
RCMA423-D-2:	
Supply voltage range U_S	AC/DC 100…250 V
Operating range U_S	AC/DC 70…300 V
Frequency range U_S	42…460 Hz
Protective separation (reinforced insulation) between	(A1, A2) -(k/l, T/R) -(11, 12, 14) -(21, 22, 24)
Voltage test according to IEC 61010-1	2.21 kV
Power consumption	≤ 6.5 VA

Measuring circuit

External measuring current transformer	CTUB101-CTBC20…210(P)
Rated insulation voltage (measuring current transformer)	800 V
Operating characteristic acc. to DIN EN 62020 and IEC 60755	type B
Rated frequency	0…2000 Hz
Relative uncertainty for *f*	
≤ 2 Hz	0…-35 %
> 2 …<16 Hz	-35…+100 %
≥ 16 … ≤ 1000 Hz	0…-35 %
> 1000 …≤ 2000 Hz	±35 %
Operating uncertainty	±17,5 %

Response values

Rated residual operating current $I_{\Delta n1}$ (prewarning, AL1)	50…100 % of $I_{\Delta n2}$ (50 %)*
Rated residual operating current $I_{\Delta n2}$ (alarm, AL2)	30 mA…3 A (30 mA)*
Hysteresis	10…25 % (15%)*

Specified time

Start-up delay *t*	0…10 s (0.5 s)*
Response delay t_{on1} (prewarning)	0…10 s (1 s)*
Response delay t_{on2} (alarm)	0…10 s (0 s)*
Delay on release t_{off}	0…99 s (1 s)*
Operating time t_{ae} bei $I_{\Delta n} = 1 \times I_{\Delta n1/2}$	≤ 180 ms
Operating time t_{ae} bei $I_{\Delta n} = 5 \times I_{\Delta n1/2}$	≤ 30 ms
Response time t_{an}	$t_{an} = t_{ae} + t_{on1/2}$
Recovery time t_b	≤ 300 ms

Displays, memory

Display range, measured value AC/DC	0…6 A
Error of indication	±17.5 %/±2 digit
Measured-value memory for alarm value	data record measured values
Password	off/0…999 (off)*
Fault memory alarm relay	on/off (on)*

Inputs/outputs

Cable length for external test/reset button	0…10 m

Cable lengths for measuring current transformers

Connection CTX…	1 m/2.5 m/5 m/10 m
or alternatively: single wire 6 x 0.75 mm²	0…10 m

Switching elements

Number of switching elements	2 x 1 changeover contact
Operating principle	N/C operation/N/O operation (N/C operation)*
Electrical endurance, number of cycles	10,000

Contact data acc. to IEC 60947-5-1

Utilisation category	AC-13	AC-14	DC-12	DC-12	DC-12
Rated operational voltage	230 V	230 V	24 V	110 V	220 V
Rated operational voltage UL	200 V	200 V	24 V	110 V	200 V
Rated operational current	5 A	3 A	1 A	0.2 A	0.1 A
Minimum contact load (relay manufacturer's reference)					10 mA/5 V DC

Environment/EMC

EMC	EN 61326-1
Ambient temperatures:	
Operating temperature	-25…+55 °C
Transport	-25…+70 °C
Long-term storage	-25…+55 °C

Classification of climatic conditions acc. to IEC 60721 (related to temperature and relative humidity)**:**

Stationary use (IEC 60721-3-3)	3K22
Transport (IEC 60721-3-2)	2K11
Long-term storage (IEC 60721-3-1)	1K22
Classification of mechanical conditions acc. to IEC 60721:	
Stationary use (IEC 60721-3-3)	3M11
Transport (IEC 60721-3-2)	2M4
Long-term storage (IEC 60721-3-1)	1M12

Connection

For UL application

use 60/70°C copper conductors only

Connection type	screw-type terminal or push-wire terminal
Screw-type terminal	
Connection properties:	
rigid/flexible	0.2…4/0.2…2.5 mm² (AWG 24-12)
Two conductors with the same cross section:	
rigid/flexible	0.2…1.5/0.2…1.5 mm²
Stripping length	8…9 mm
Tightening torque, terminal screws	0.5…0.6 Nm
Push-wire terminals	
Connection properties:	
rigid	0.2…2.5 mm² (AWG 24-14)
flexible without ferrules	0.75…2.5 mm² (AWG 19-14)
flexible with ferrules	0.2…1.5 mm² (AWG 24-16)
Stripping length	10 mm
Opening force	50 N
Test opening, diameter	2.1 mm

Other

Operating mode	continuous operation
Position of normal use	display-oriented
Degree of protection, internal components (IEC 60529)	IP30
Degree of protection, terminals (IEC 60529)	IP20
Enclosure material	polycarbonate
Flammability class	UL94V-0
DIN rail mounting acc. to	IEC 60715
Screw mounting	2 x M4 with mounting clip
Documentation number	D00063
Weight	≤ 150 g

( )* = factory setting

Dimension diagram (dimensions in mm)

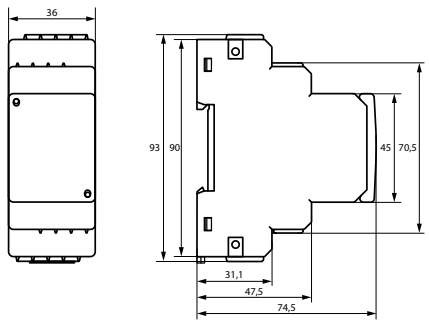

Wiring diagram

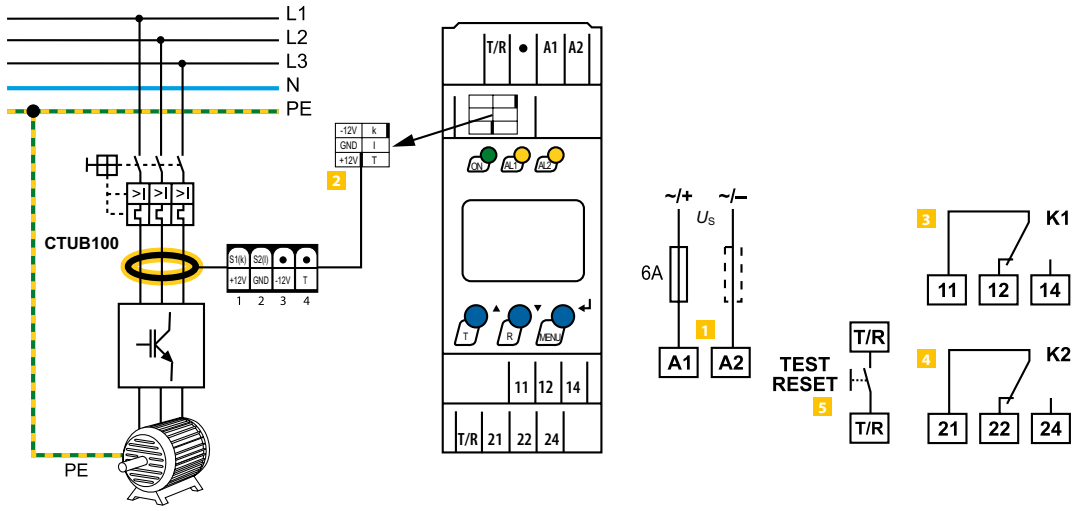

1	**A1, A2**	Supply voltage U_S see ordering information, 6 A fuse recommended
2		Connector for the external CTUB10x-CTBC20…CTUB10x-CTBC60 series measuring current transformer
3	**11, 12, 14**	Alarm relay "K1": $I_{\Delta n1}$ (prewarning)
4	**21, 22, 24**	Alarm relay "K2": alarm $I_{\Delta n2}$ (alarm)
5	**T/R**	Combined test and reset button "T/R" short-time pressing (< 1.5 s) = RESET long-time pressing (> 1.5 s) = TEST

Do not route the PE conductor through the measuring current transformer!

Connection of measuring current transformers

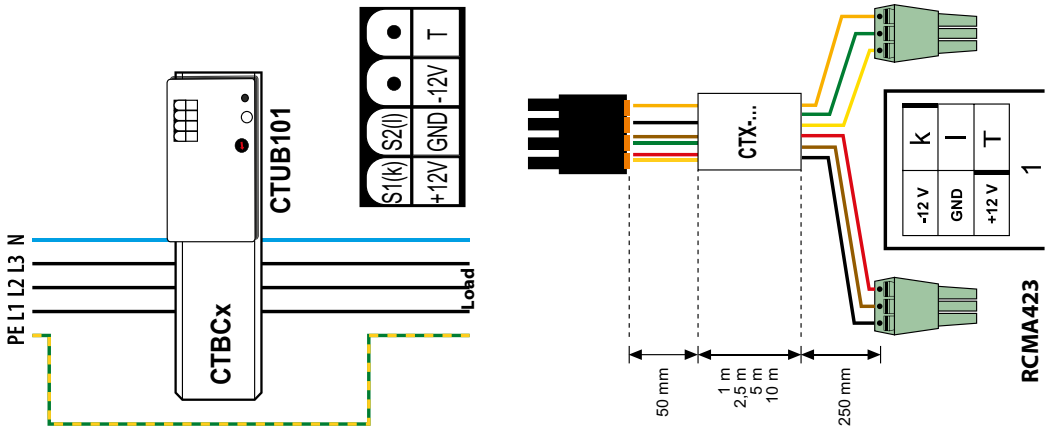

Connection to the RCMA423 residual current monitor using the CTX-… connecting cable.

Colour coding for CTX…: k = yellow, l = green, -12 V = black, GND = brown, +12 V = red, Test (T) = orange

LINETRAXX® SmartDetect RCMS410

Four-channel residual current monitor sensitive to AC, pulsed DC, and smooth DC for earthed AC, AC/DC, and DC systems

Typical applications

- Fault or residual current monitoring in earthed systems (TN/TT)

Approvals

Device features

- AC, pulsed-DC, and smooth-DC sensitive residual-current monitor type A, type F, type B and type B+ according to IEC 62020-1 (depending on the connected measuring-current transformers and activated function modules)
- Four channels
- Measurement modes for each channel: overcurrent (standard), undercurrent, or window mode (out-of-range-values). Every channel can alternatively also be configured as digital input
- One digital input, one digital input/output, and one multifunctional digital/analogue output
- Measurement of the r.m.s. value
- Residual operating current
  - Type A: 6 mA…30 A
  - Type F: 6 mA…30 A (15 Hz…20 kHz)
  - Type B/Type B+: 10 mA…10 A
    (only with function module B "AC/DC sensitive measuring and evaluation of values")
- Separate evaluation of AC/DC (RMS), AC and DC
- Prewarning: 10…100 % of the residual operating current
- Supply voltage 24 V DC
- Alarm-LED for each channel
- Device status and Alarm LEDs
- Fault-memory behaviour selectable
- RS-485 with Modbus RTU
- NFC interface for device parameter setting via Bender Connect App with the device engerised or de-energised
- Continuous CT-connection monitoring
- Expanded functions available by enabling these function modules:
  - Harmonic analysis (FFT)
  - AC/DC sensitive measuring and evaluation of values
  - Connection of Type A external transformers

Bender Connect App

Download on the App Store

GET IT ON Google Play

Licences

For a list of the open-source software used see our homepage.

Standards

The RCMS410 device has been developed in accordance with the following standards:

- DIN EN IEC 62020-1
- DIN EN 50155
- UL508

Further information

For further information refer to our product range on www.bender.de.

Ordering information

Type	Supply voltage U_s	Measuring-current transformers that can be used		Configurable at the factory	Enabled function modules *	Art. No.
		Type A / Type F	Type B / Type B+			
RCMS410-24	DC 24 V	✓	(✓) with function module B	Factory settings**, function modules	Customised (A, B, C can be bought later)	B84604040
		✓	✓	–	B (A and C can be bought later)	B84604041
		✓	✓	–	A, B, C	B84604042

* Function modules:
A: Harmonic analysis (FFT)
B: AC/DC sensitive measuring and evaluation of values
C: Connection of type A external current transformers

** As part of the ordering process, customer-specific factory settings can be defined together with our sales department for some parameters (e.g. response values and interface settings) with which the units are delivered. The reference to a customer-specific configured variant can then be found on the packaging of the individual product as well as in the delivery note (the changed parameters are listed there, the assignment is made via the item number in the delivery note and the serial number of the unit).

Technical data

Insulation coordination (IEC 60664-1/IEC 60664-3)

Rated voltage	50 V
Overvoltage category	III
Rated impulse voltage	800 V
Rated insulation voltage	50 V
Pollution degree	2

Supply voltage

Connection	+, –
Supply voltage U_s	24 V DC
Protection class of power supply unit	2 or 3
Permissible tolerance	–30…+25 %
Permissible ripple	5 %
Power consumption	≤ 2 W
Inrush current (5 ms)	< 10 A

Measuring circuit

Burden (internal)	33 Ω
Frequency range	DC, 15 Hz…20 kHz
for details	see chapter 8.1 in the manual
Measuring range (peak)	3 mA…100 A
Measuring range rms	2 mA…70 A
Rated residual operating current	
Type A, type F	30 A
Type B, type B+	10 A
Residual operating current IΔn (main alarm, AL2) [1]	
Type A, type F	6 mA…30 A (30 mA)*
Type B, type B+	10 mA…10 A (30 mA)*
Prewarning (AL1)	10…100 % x $I_{\Delta n}$ (50 %)*
Operating uncertainty	±10 % (at 0.5…5 x $I_{\Delta n}$)
Relative response uncertainty	0…-20 %
for Lloyds applications	0…-50 %
for railway applications as per EN 50121-3-2/-4 and EN 50155	0…-50 %
Hysteresis	10…25 % (15 %)*
Fault-memory alarm messages	on/off (off)*
permissible continuous residual current with	
single-channel use	85 A
dual-channel use	60 A
use of three channels	49 A
use of four channels	42 A

Measuring-current transformers

Connection	of CT1, CT2, CT3, CT4
Measuring-current transformer series	
Type A	CTAC, CTAS, W, WR, WS
Type F	CTAC
Type B, type B+	CTUB-CTBC, CTBS
CT connection monitoring	yes
Rated voltage U_n	see measuring-current-transformer manual
Connecting wires	see measuring-current-transformer manual
For UL applications	60/75 °C copper conductors
External transformers	
permissible continuous secondary current with	
single-channel use	140 A
dual-channel use	100 A
use of three channels	80 A
use of four channels	70 A
Permissible number of windings	100…1000

Time response

Start-up delay t	0…999 s (0 s)*
Response delay t_{on}	0…10 s (0 s)*
Delay on release t_{off}	0…999 s (1 s)*
Operating time t_{ae}	
with 1 x $I_{\Delta n}$	≤250…ms
with 5 x $I_{\Delta n}$	40…100 ms
Response time t_{an}	$= t_{ae} + t_{on}$
Recovery time tb	≤ 500 ms
Response time for CT connection monitoring	≤ 10 s

Operation

Display	status LED, alarm LEDs, channel LEDs
Buttons	reset/test / NFC / address setting
Terminating resistor DIP switches	on/off (off)*

RS-485 interface

Connection	A, B
Protocol	Modbus RTU
Baud rate	max 115.2 kbits/s (19.2 kbits/s)*
Parity	even, no, odd (even)*
Stop bits	1/2/auto (auto)*
Cable length (at 9.6 kbits/s)	≤ 1200 m
Device address	1…247 (100+ last 2 digits of SN)*
Recommended lines, shield on one side connected to PE	
CAT6/CAT7	min AWG23
min. J-Y(St)Y 2 x 0.6 mm²	twisted pair

NFC interface

Frequency	13.56 MHz
Transmitting power [2]	0 W

Input I

Connection	I, ⊥
max. cable length (recommended)	10 m
external connections	potential-free contact

Input/output Q

Connection	Q, ⊥
max. cable length (recommended)	10 m
max. load	20 mA
Low voltage level (output)	0…2 V
High voltage level (output)	10 V…U_s
External voltage (passive mode)	DC 0…(U_s - 1 V)

Output M+

Connection	M+, ⊥
max. cable length (recommended)	10 m
max. load	20 mA
Burden	
current output	≤ 600 Ω
voltage output	≥ 10 kΩ
Tolerance with respect to final current/voltage value	±20 %
External voltage (passive mode)	DC 0…U_s

Technical data (continuation)

Connections

terminals	plug-in screw-type terminals
Terminal series	Phoenix Contact MC 1,5/ -ST-3,5 BK
Connection properties	
rigid	0.14…1.5 mm²
flexible, without plastic sleeve	0.25…1.5 mm²
flexible, with plastic sleeve	0.25…0.5 mm²
Stripping length	7 mm
Tightening torque	0.22…0.25 Nm
Conductor cross section AWG	28…16

EMC/Environment

EMC	DIN EN IEC 62020-1
Operating temperature	-40…+70 °C
Transport	-40…+85 °C
Long-time storage	-40…+70 °C

Classification of climatic conditions acc. to IEC 60721 (related to temperature and relative humidity):

Stationary use (IEC 60721-3-3)	3K22
Transport (IEC 60721-3-2)	2K11
Long-term storage (IEC 60721-3-1)	1K22

Classification of mechanical conditions acc. to IEC 60721

Stationary use (IEC 60721-3-3)	3M11
Transport (IEC 60721-3-2)	2M4
Long-term storage (IEC 60721-3-1)	1M12

Other

Operating mode	continuous operation
Mounting	vertical
Degree of protection (DIN EN 60529)	
internal components	IP30
terminals	IP20
Enclosure material	polycarbonate
DIN rail mounting acc. to	IEC 60715
Flammability class	UL94 V-0
Documentation number	D00424
Weight	< 65 g

* Factory setting

1) The requirements of the respective standards are only met with a response value from 30 mA to 9.9 A

2) EMC influences may lead to communication interruptions at the NFC interface

Dimension diagram (dimensions in mm)

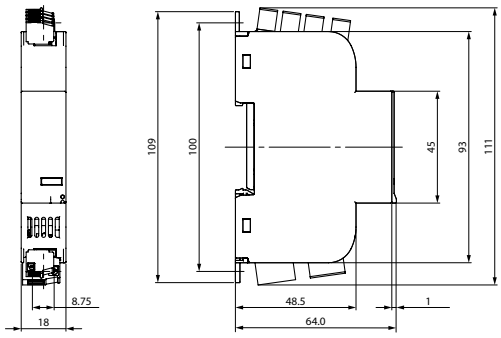

Wiring diagram

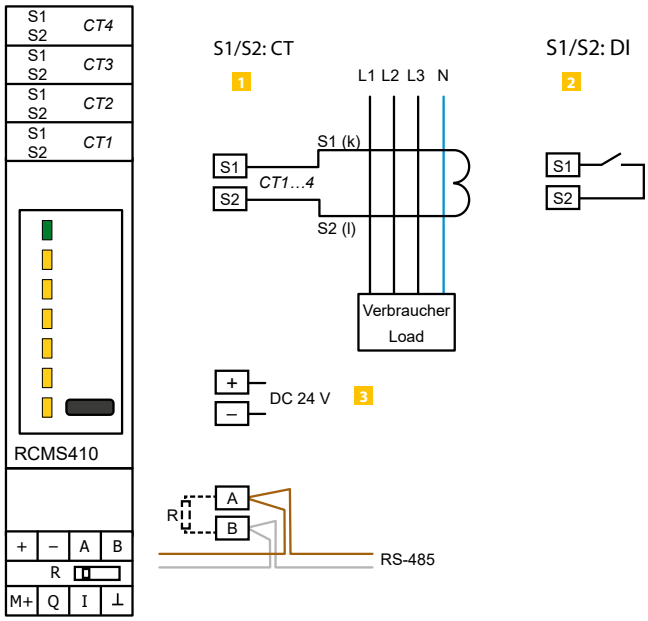

1 **S1/S2 CT** Measuring-current-transformer connection

2 **S1/S2 DI** CT1…4 as digital input

3 **+24 V** The device must be operated with a voltage of +24 V DC. The connection is made at the bottom side of the device.

The RCMS410 and all connected CTUB102-CTBCxx devices must be supplied from the same mains part.

Ensure that the 24-V-DC supply is connected correctly. Otherwise the RCMS410 can be destroyed!

For UL applications:
Use 60/75 °C copper conductors only!

Only power supply units of protection class 2 or 3 shall be used.

LINETRAXX® RCMS460-D/-L – RCMS490-D/-L

Multi-channel AC, pulsed DC and AC/DC sensitive residual current monitors
for earthed AC, DC and AC/DC systems (TN and TT systems)

Typical applications

- Measuring and evaluating residual, fault and rated currents of loads and installations in the frequency range of
  - 0…2000 Hz (CTUB100 or CTBS25 series measuring current transformers),
  - 42…2000 Hz (CTAC…, WR…, WS…, WF… series measuring current transformers)
- Monitoring of currents regarded as fire hazards in flammable atmospheres
- EMC monitoring of TN-S systems for "stray currents" and additional N-PE connections
- Monitoring of N conductors for overload caused by harmonics
- Monitoring of PE and equipotential bonding conductors to ensure they are free of current
- Residual current monitoring of stationary electrical equipment and systems to determine test intervals which meet practical requirements in compliance with the DGUV regulation 3 (German Social Accident Insurance).
- Personnel and fire protection due to rapid disconnection
- Monitoring of digital inputs

Device features

- Optional AC, pulsed DC or AC/DC sensitive measurement by selecting the respective measuring current transformer for each channel
- True r.m.s. value measurement
- 12 measuring channels per device for residual current measurement or digital input
- Up to 90 RCMS… monitors, up to1080 measuring channels in the system
- Fast parallel scanning for all channels
- Response ranges:
  10 mA…10 A (0…2000 Hz), 6 mA…20 A (42…2000 Hz), 100 mA…125 A (42…2000 Hz) RCMS…-D4
- Preset function
- Adjustable time delays
- The frequency response characteristics can be set for the protection of persons, fire and plant protection
- History memory with date and time stamp for 300 data records
- Data logger for 300 data records/channel
- Analysis of the harmonics, DC, THF
- Two alarm relays with one changeover contact each
- Device version RCMS490 with one alarm contact per channel
- N/O or N/C operation and fault memory selectable
- Connection external test/reset button
- Backlit graphical display (7-segment display) and alarm LEDs
- Data exchange via BMS bus
- Password protection for device setting
- Continuous CT connection monitoring
- RoHS compliant

Standards

The LINETRAXX® RCMS460/490 series complies with the requirements of the device standards:

- DIN EN 62020 (VDE 0663)

Approvals

UL508 – Standard for Industrial Control Equipment CSA C22.2 No. 14-13 – Industrial Control Equipment
UL File number E173157 (for all RCMS460/RCMS490)

UL1053 - Standard for Safety Ground-Fault Sensing and Relaying Equipment
UL File number E478610
(Only for B94053006 and solely in combination with Marina Guard MG-1.3 and MG-T.3.
If necessary, other applications are to be evaluated separately after consulting the manufacturer.)

Further information

For further information refer to our product range on www.bender.de.

Ordering information RCMS460/490-D

Type	Supply voltage U_s	Differential measurement method		Common alarm relay for all channels	Alarm relay per channel	4 channels for load current measurement	Art. No.
		pulsed DC sensitive	AC/DC sensitive				
RCMS460-D-1	AC 16…72 V, 50/60 Hz / DC 16…94 V	6 mA…20 A	10 mA…10 A	2 x 1 changeover contact	–	–	B94053001
RCMS460-D-2	AC 70…276 V, 50/60 Hz / DC 70…276 V						B94053002
RCMS460-D4-1	AC 16…72 V, 50/60 Hz / DC 16…94 V					100 mA…125 A	B94053009
RCMS460-D4-2	AC 70…276 V, 50/60 Hz / DC 70…276 V						B94053010
RCMS490-D-1	AC 16…72 V, 50/60 Hz / DC 16…94 V				12 x 1 N/O contact	–	B94053005
RCMS490-D-2	AC 70…276 V, 50/60 Hz / DC 70…276 V						B94053006
RCMS490-D4-1	AC 16…72 V, 50/60 Hz / DC 16…94 V					100 mA…125 A	B94053011
RCMS490-D4-2	AC 70…276 V, 50/60 Hz / DC 70…276 V						B94053012

Ordering information RCMS460/490-L

Type	Supply voltage U_s	Current measurement		Common alarm relay for all channels	Alarm relay per channel	Art. No.
		pulsed DC sensitive	AC/DC sensitive			
RCMS460-L-1	AC 16…72 V, 50/60 Hz / DC 16…94 V	6 mA…20 A	10 mA…10 A	2 x 1 changeover contact	–	B94053003
RCMS460-L-2	AC 70…276 V, 50/60 Hz / DC 70…276 V					B94053004
RCMS490-L-1	AC 16…72 V, 50/60 Hz / DC 16…94 V				12 x 1 N/O contact	B94053007
RCMS490-L-2	AC 70…276 V, 50/60 Hz / DC 70…276 V					B94053008

Accessories

Description	Art. No.
XM460 mounting frame, 144 x 72 mm	B990995
XM490 mounting frame, 198 x 72 mm	B990996

Suitable system components

Description	Version	Type of construction	Type	Art. No.	Page
Measuring current transformers	pulsed DC sensitive	circular	CTAC…	B981100…	**342**
		rectangular	WR…S(P)	B9117…	**349**
		split-core	WS…	B980806…	**356**
		flexible	WF…	B780802…	**360**
	AC/DC sensitive	circular	CTUB100	B781200…	**345**
			CTBS25	B98120060	**354**
Connecting cables for Measunging current transformers CTUB100 series	–	–	CTXS…	B9811009…	**345**
Condition Monitor	with integrated gateway: Bender system/Ethernet	–	COM465IP	B950610…	**394**
	with display and an integrated gateway	–	CP9…-I	B9506103…	**408**
RS-485 repeater	–	–	DI-1DL	B95012047	**389**
Power supply unit	for supplying up to six CTUB100 series measuring current transformers	–	STEP-PS	B940531…	**381**
Alarm indicator and test combination	acc. DIN VDE 0100-710	–	MK2430	B951000…	**418**

Overview of device types

Device features/distinguishing features			RCMS460-D…	RCMS460-L	RCMS490 -D…	RCMS490-L…
	Parameter setting function		✓	–	✓	–
	Master/Slave		✓	✓	✓	✓
	Address range		1…90	1…90	1…90	1…90
Measuring circuit	Measuring channels per device		12	12	12	12
	CTAC…, WR…S(P), WS…, CTUB100, CTBS25, W…F series measuring current transformers		✓	✓	✓	✓
	CT monitoring		✓	✓	✓	✓
	Rated residual operating current $I_{\Delta n2}$ (Alarm)	AC/DC sensitive 0…2000 Hz (Type B)	10 mA…10 A	10 mA…10 A	10 mA…10 A	10 mA…10 A
		pulsed DC sensitive 42…2000 Hz (Type A)	6 mA…20 A	6 mA…20 A	6 mA…20 A	6 mA…20 A
		pulsed DC sensitive 42…2000 Hz (Type A) for the channels 9…12 (RCMS4x0-D4/-L4)	100 mA…125 A	100 mA…125 A	100 mA…125 A	100 mA…125 A
	Rated residual operating current $I_{\Delta n1}$ (prewarning)		10…100 %, min. 5 mA	10…100 %, min. 5 mA	10…100 %, min. 5 mA	10…100 %, min. 5 mA
	Function selectable per channel off, <, >, I/O		✓	✓	✓	✓
	Cut-off frequency adjustable for personnel, plant and fire protection		✓	*	✓	*
	Preset function for $I_{\Delta n2}$ and I/O		✓	✓	✓	✓
	Hysteresis		2…40 %	2…40 %	2…40 %	2…40 %
	Factor for additional CT		✓	✓	✓	✓
Switching elements	Common alarm relay for all channels		2 x 1 changeover contact	2 x 1 changeover contact	2 x 1 changeover contact	2 x 1 changeover contact
	Alarm relay per channel		–	–	12 x 1 N/O contact	12 x 1 N/O contact
Time response	Start-up delay 0…99 s		✓	✓	✓	✓
	Response delay tv, adjustable 0…999 s		✓	✓	✓	✓
	Operating time at	$I_{\Delta n}$ = 1 x $I_{\Delta n2}$: ≤ 180 ms	✓	✓	✓	✓
		$I_{\Delta n}$ = 5 x $I_{\Delta n2}$: ≤ 30ms	✓	✓	✓	✓
Displays, memory	Analysis of the harmonics (I_Δ, DC, THF)		✓	*	✓	*
	History memory 300 data records		✓	–	✓	–
	Data logger for 300 data records/ channel		✓	–	✓	–
	Internal clock		✓	–	✓	–
	Password		✓	–	✓	–
	Language English, German, French, Swedish		✓	–	✓	–
	Backlit graphics LC display		✓	–	✓	–
	7-segment display and LED line		–	✓	–	✓

* only in conjunction with RCMS4xx-D, MK2430 or COM460IP

Technical data

Insulation coordination acc. to IEC 60664-1/IEC 60664-3 for the versions:

a) RCMS4x0-D1

Supply voltage U_s	DC 24…75 V/AC 24…60 V (AC/DC ±20 %)
Supply voltage frequency	DC, 50/60 Hz
Rated insulation voltage	**100 V**
Rated impulse voltage/pollution degree	2.5 kV/3
Overvoltage category	III
Protective separation (reinforced insulation) between	(A1, A2) - (k1, I…k12, R, T/R, T, A, B)
Voltage test acc. to IEC 61010-1	1.344 kV
Rated insulation voltage	**250 V**
Rated impulse voltage/pollution degree	4 kV/3
Overvoltage category	III
Basic insulation between	(A1, A2), (k1, I…k12, R, T/R, T, A, B) - (C11, C12, C14), (C21, C22, C24), (11,14), (21,24), (31,34), (41,44), (51,54), (61,64), (71,74), (81,84), (91,94),(101,104), (111,114), (121,124)
Basic insulation between:	(11, 14) - (21, 24) - (31, 34) - (41, 44) - (51, 54) - (61, 64)
Voltage test acc. to IEC 61010-1	2.21 kV
Rated insulation voltage	**250 V**
Rated impulse voltage/pollution degree	6 kV/3
Overvoltage category	III
Protective separation (reinforced insulation) between	(C11, C12, C14) - (C21, C22, C24) - (11, 14, 21, 24, 31, 34) - (41, 44, 51, 54, 61, 64) - (71,74) - (81,84) - (91,94) - (101,104) - (111,114) - (121,124)
Voltage test acc. to IEC 61010-1	3.536 kV

b) RCMS4x0-D2

Supply voltage U_s	AC/DC 100…240 V (-20…+15 %)
Supply voltage frequency	DC, 50/60 Hz
Rated insulation voltage	**250 V**
Rated impulse voltage/pollution degree	6 kV/3
Overvoltage category	III
Protective separation (reinforced insulation) between	(A1, A2) - (k1, I…k12, R, T/R, T, A, B), (C11, C12, C14), (C21, C22, C24), (11,14), (21,24), (31,34), (41,44), (51,54), (61,64), (71,74), (81,84), (91,94),(101,104), (111,114), (121,124)
Protective separation (reinforced insulation) between	(C11, C12, C14) - (C21, C22, C24) - (11, 14, 21, 24, 31, 34) - (41, 44, 51, 54, 61, 64) - (71,74) - (81,84) - (91,94) - (101,104) - (111,114) - (121,124)
Voltage test acc. to IEC 61010-1	3.536 kV
Rated insulation voltage	**250 V**
Rated impulse voltage/pollution degree	4 kV/3
Overvoltage category	III
Basic insulation between:	k1, I…k12, R, T/R, T, A, B) - (C11, C12, C14), (C21, C22, C24)
Basic insulation between:	(11, 14) - (21, 24) - (31, 34) - (41, 44) - (51, 54) - (61, 64)
Voltage test acc. to IEC 61010-1	2.21 kV

Measuring circuit

External measuring current transformers	CTAC…, WR…, WS…, WF… series (Type A), CTUB100, CTBS25 series (Type B)
CT monitoring	on/off (on)*
Rated burden RCMS…-D/-L	68 Ω
Rated burden RCMS…-D4/-L4 (channels 9…12 only)	1 Ω
Rated insulation voltage (measuring current transformer)	800 V
Operating characteristics acc. to IEC/TR 60755	type A and type B depending on measuring current transformer series (type A)*
Rated frequency	0…2000 Hz (Type B) / 42…2000 Hz (type A)
Cut-off frequency	none, IEC, 50 Hz, 60 Hz (none)*
Measuring range RCMS…-D/-L	0…30 A (measuring current transformer type A) 0…20 A (measuring current transformer type B) Crest factor up to 10 A = 4, up to 20 A = 2
Measuring range RCMS…-D4/-L4 (channels 9…12 only)	100 mA…125 A
Rated residual operating current IΔn2 (alarm)	10 mA…10 A (type B) 6 mA…20 A (type A) (100 mA overcurrent)*
Rated residual operating current $I_{\Delta n2}$ (alarm) for RCMS…-D4/-L4 (channels 9…12 only)	100 mA…125 A (16 A overcurrent)*
Rated residual operating current $I_{\Delta n1}$ (prewarning)	10…100 % x $I_{\Delta n2}$ min. 5 mA (50 %)*
Digital input	1: < 100 Ω 0: > 250 Ω
Preset for alarm	I_{Δ} x factor 1…99 (3)* Offset 0…20 A (30 mA)*
Preset for digital input	0/1 (1)*
Relative uncertainty RCMS…-D/-L	0…-20 %**
Relative uncertainty RCMS…-D4/-L4 (channels 9…12 only)	+10…-20 %**
Hysteresis	2…40% (20 %)*
Factor for additional CT	/1…10; x 1…250 (x 1)*
Number of measuring channels (per device/system)	12/1080

Time response

Start-up delay *t* (start-up) per device	0…99 s (0 ms)*
Response delay t_{on} per channel	0…999 s (200 ms)*
Delay on release t_{off} per channel	0…999 s (200 ms)*
Operating time t_{ae} at $I_{\Delta n} = 1 \times I_{\Delta n1/2}$	≤ 180 ms
Operating time t_{ae} at $I_{\Delta n} = 5 \times I_{\Delta n1/2}$	≤ 30 ms
Response time t_{an} for residual current measurement	$t_{an} = t_{ae} + t_{on1/2}$
Operating time t_{ae} digital inputs	≤ 3.5 s
Scanning time for all measuring channels (residual current measurement)	≤ 180 ms
Recovery time t_b	500…600 ms

Displays, memory

Measured value display range RCMS…-D / -L	0…30 A (CT Type A) 0…20 A (CT type B)
Display range, measured value RCMS…-D4/-L4 (channels 9…12)	0…125 A (CT type A)
Error of indication	± 10 %
LEDs	ON/ALARM (RCMS…-D…) ON/ALARM / measuring channel 1…12 (RCMS…-L…)
LC display	backlit graphical display (RCMS…-D…)
7-segment display	2 x 7.62 mm (RCMS4…-L)
History memory	300 data records (RCMS…-D…)
Data logger	300 data records per measuring channel (RCMS…-D…)
Password	off / 0…999 (off)*
Language	
German, English, French	D256 V2.3x
German, English, Swedish	D339 V2.3x
German, English, Italian	D403 V2.3x
Fault memory alarm relay	on/off (off)*

Inputs/outputs

Test/reset button	internal/external
Cable length for external test/reset button	0…10 m

Interface

Interface/protocol	RS-485/BMS
Baud rate	9.6 kbit/s
Cable length	0…1200 m
Cable (shielded, shield connected to PE on one side)	recommended: min. J-Y(St)Y min. 2x0.8
Terminating resistor	120 Ω (0.25 W) connectable via DIP switch
Device address, BMS bus	1…90 (2)*

Cable lengths for CTAC…, WR…, WS…, WF… series measuring current transformers

Single wire ≥ 0.75 mm²	0…1 m
Single wire, twisted ≥ 0.75 mm²	0…10 m
Shielded cable ≥ 0.5 mm²	0…40 m
Cable (shielded, shield connected to terminal l at one end, must not be earthed)	recommended: J-Y(St)Y min. 2 x 0.8

Cable lengths for CTUB100 and CTBS25 series measuring current transformers

Single wire ≥ 0.75 mm²	0…10 m
Connection	plug-in connector, recommended CTXS…

Switching elements

Number	2 x 1 changeover contact (RCMS460) 2 x 1 changeover contact, 12 x 1 N/O contact (RCMS490)
Operating principle	NC or N/O operation (N/O operation)*
Electrical endurance under rated operating conditions, number of cycles	10.000

Contact data acc. to IEC 60947-5-1

Utilisation category	AC-13	AC-14	DC-1	DC-12	DC-12
Rated operational voltage	230 V	230 V	24 V	110 V	220 V
Rated operational current (common alarm relay)	5 A	3 A	1 A	0.2 A	0.1 A
Rated operational current (alarm relay)	2 A	0.5 A	5 A	0.2 A	0.1 A
Minimum contact rating					10 mA/5 V DC

Environment/EMC

EMC	DIN EN 62020
Operating temperature	-25…+ 55 °C

Classification of climatic conditions acc. to IEC 60721
(related to temperature and relative humidity)

Stationary use (IEC 60721-3-3	3K22
Transport (IEC 60721-3-2)	2K11
Long-term storage (IEC 60721-3-1)	1K22

Classification of mechanical conditions acc. to IEC 60721

Stationary use (IEC 60721-3-3)	3M11
Transport (IEC 60721-3-2)	2M4
Long-term storage (IEC 60721-3-1)	1M12

Connection

For UL applications:
Use copper wire only!
Use 60/70 °C copper conductors only!

Connection	screw terminals
Connection properties:	
Rigid/flexible/conductor sizes	0.2…4/0.2…2.5 mm²/AWG 24…12
Multi-conductor connection (2 conductors with the same cross section):	
Rigid/flexible	0.2…1.5/0.2…1.5 mm2
Stripping length	8…9 mm
Tightening torque	0.5…0.6 Nm

Other

Operating mode	continuous operation
Mounting	display-oriented
Degree of protection, internal components (IEC 60529)	IP30
Degree of protection, terminals (IEC 60529)	IP20
Enclosure material	polycarbonate
Flammability class	UL94V-0
Screw mounting	2 x M4
DIN rail mounting acc. to	IEC 60715
Software version measurement technique	D233 V2.60
Software version display	
RCMS4…-L	D216 V2.3x
German, English, French	D256 V2.3x
German, English, Swedish	D339 V2.3x
German, English, Italian	D403 V2.3x
Power consumption	≤10 VA (RCMS460) ≤12 VA (RCMS490)
Documentation number	D00067
Weight	≤ 300 g (RCMS460), ≤ 510 g (RCMS490)

( )* factory setting

** In the frequency range of < 15 Hz, the relative uncertainty is between -35 % and 100 %.

Dimension diagrams (dimensions in mm)

RCMS460-D/-L

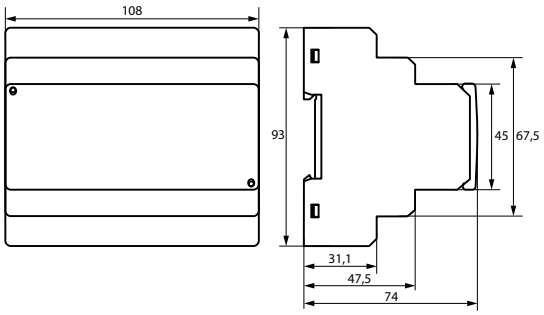

RCMS490-D/-L

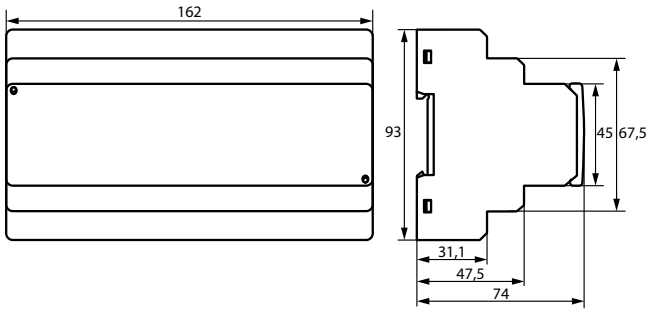

Wiring diagrams

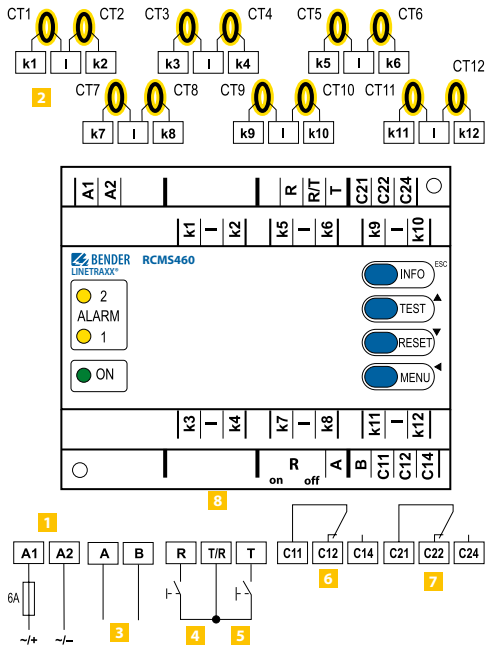

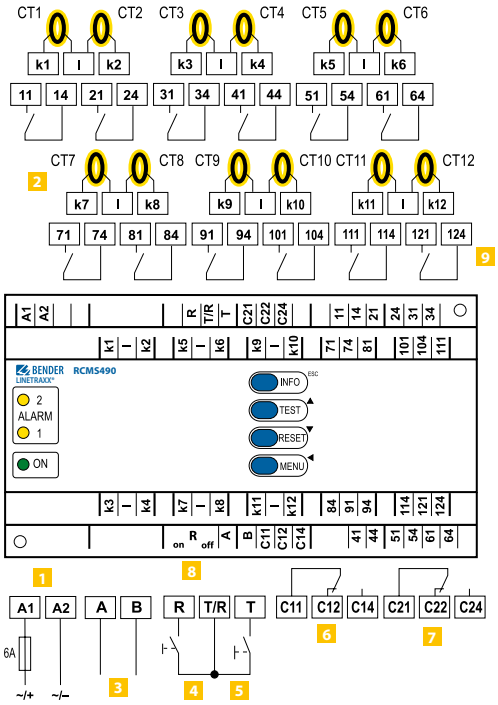

1	**A1, A2**	Connection of supply voltage U_s (see ordering information): we recommend the use of 6 A fuses.
2	**k1, I… k12, I**	CT1…CT12. Either Type A or Type B measuring current transformers can be selected for each measuring channel. Six CTUB100 series measuring current transformers require one STEP-PS power supply unit. The channels k9…k12 of the device versions RCMS460-D4/-L4 require the connection of Type A measuring current transformers.
3	**A, B**	BMS bus (RS-485 interface with BMS protocol)
4	**R, T/R**	External reset button (N/O contact). The external reset buttons of several devices must not be connected to one another.
5	**T, T/R**	External test button (N/O contact). The external test buttons of several devices must not be connected to one another.
6	**C11, C12, C14**	Common alarm relay K1: Alarm 1, common message for alarm, prewarning, device error.
7	**C21, C22, C24**	Common alarm relay K2: ALARM 2, common message for alarm, prewarning, device error.
8	$R_{on/off}$	Activate or deactivate the terminating resistor of the BMS bus (120 Ω).
9	**CT**	Measuring current transformers (CTAC…, CTBS25, CTUB100, WR…, WS…, WF… series)

Digital input

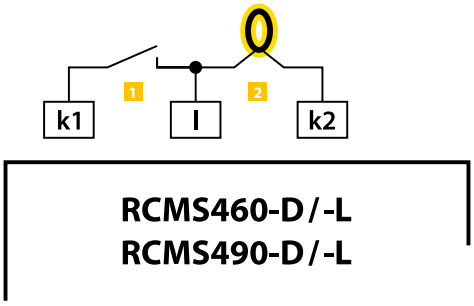

1 Potential-free contact
0 ≙ Resistance between k and l > 250 Ω
l ≙ Resistance between k and l < 100 Ω

2 Measuring current transformers

Connection CTAC…, WR…S(P), WS… series measuring current transformers (pulsed current sensitive)

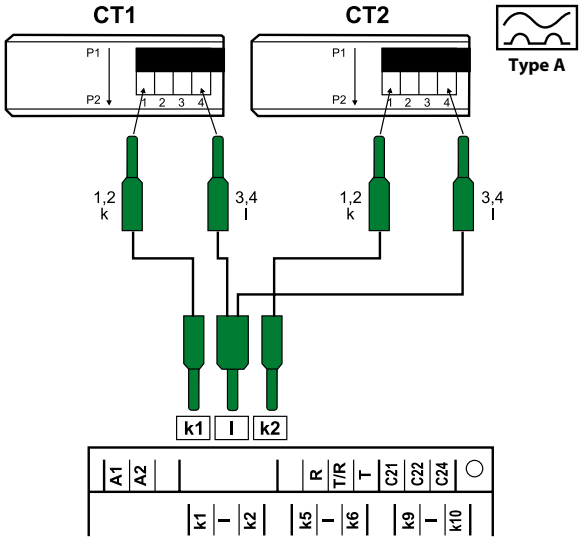

Connection CTUB100 series measuring current transformer (AC/DC current sensitive)

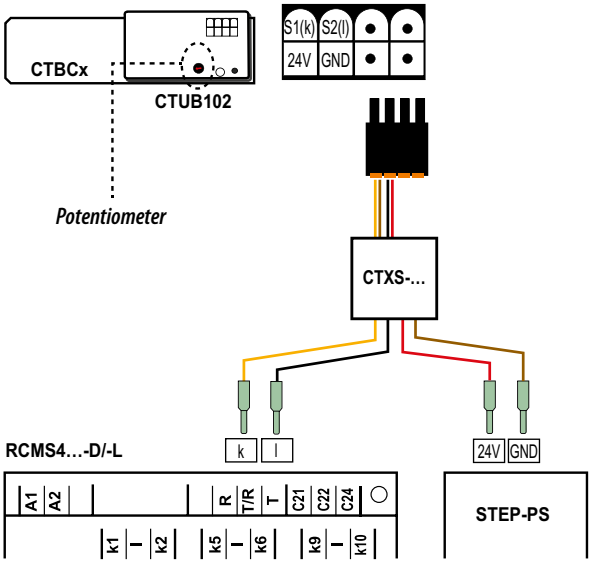

Connection WF… series measuring current transformers

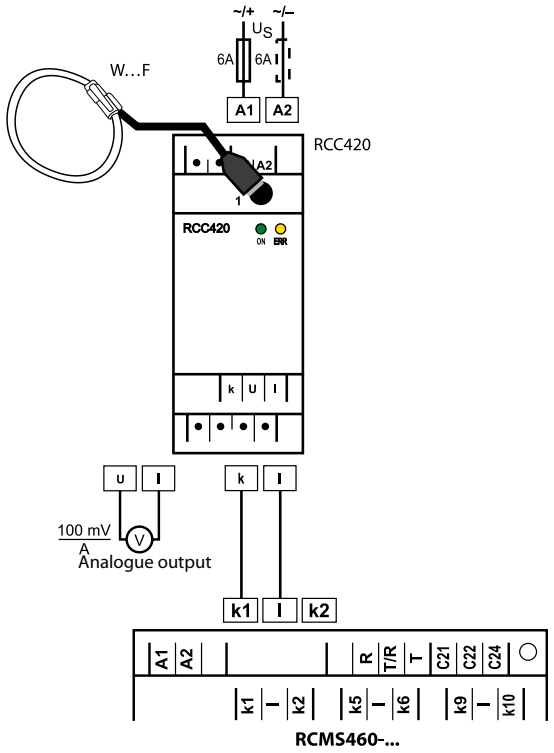

Connection CTUB100 series measuring current transformer (AC/DC current sensitive)

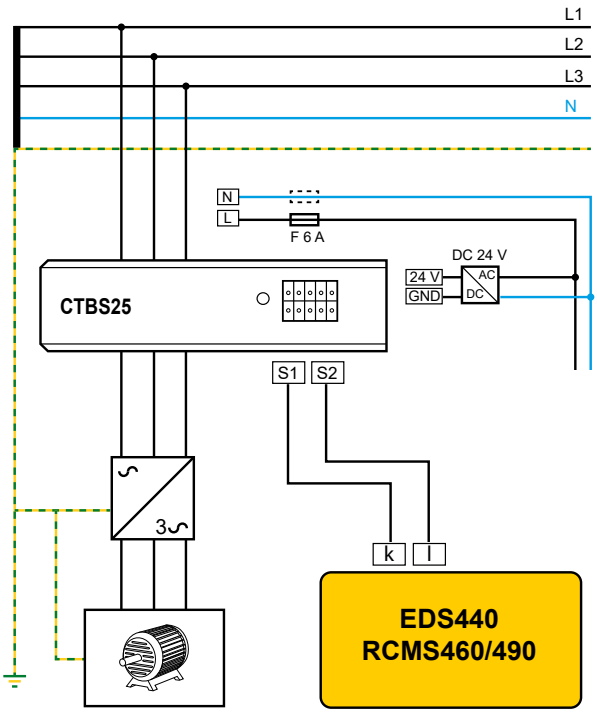

Example for a system design – minimum system consisting of an RCMS460-D and 12 measuring points

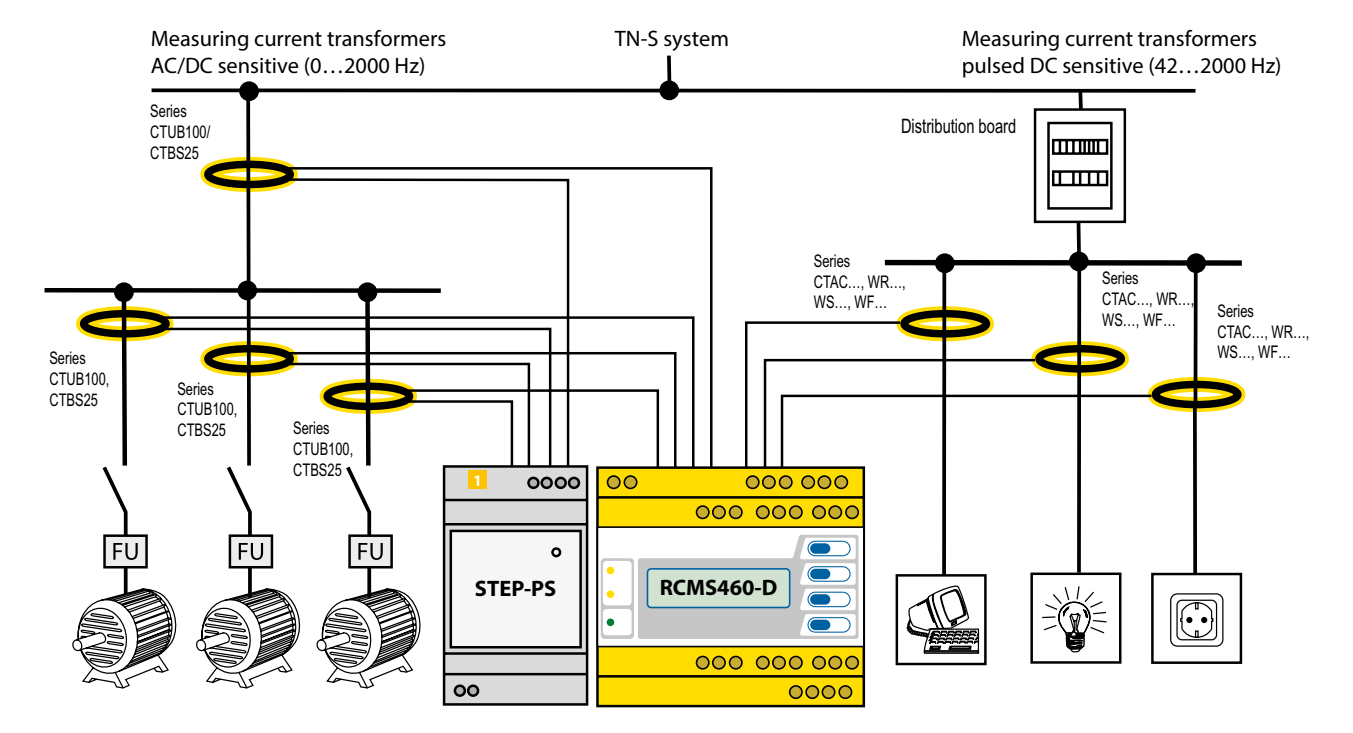

Example for a system design of – standard system consisting of an RCMS460-D and RCMS460-L and a protocol converter COM460IP

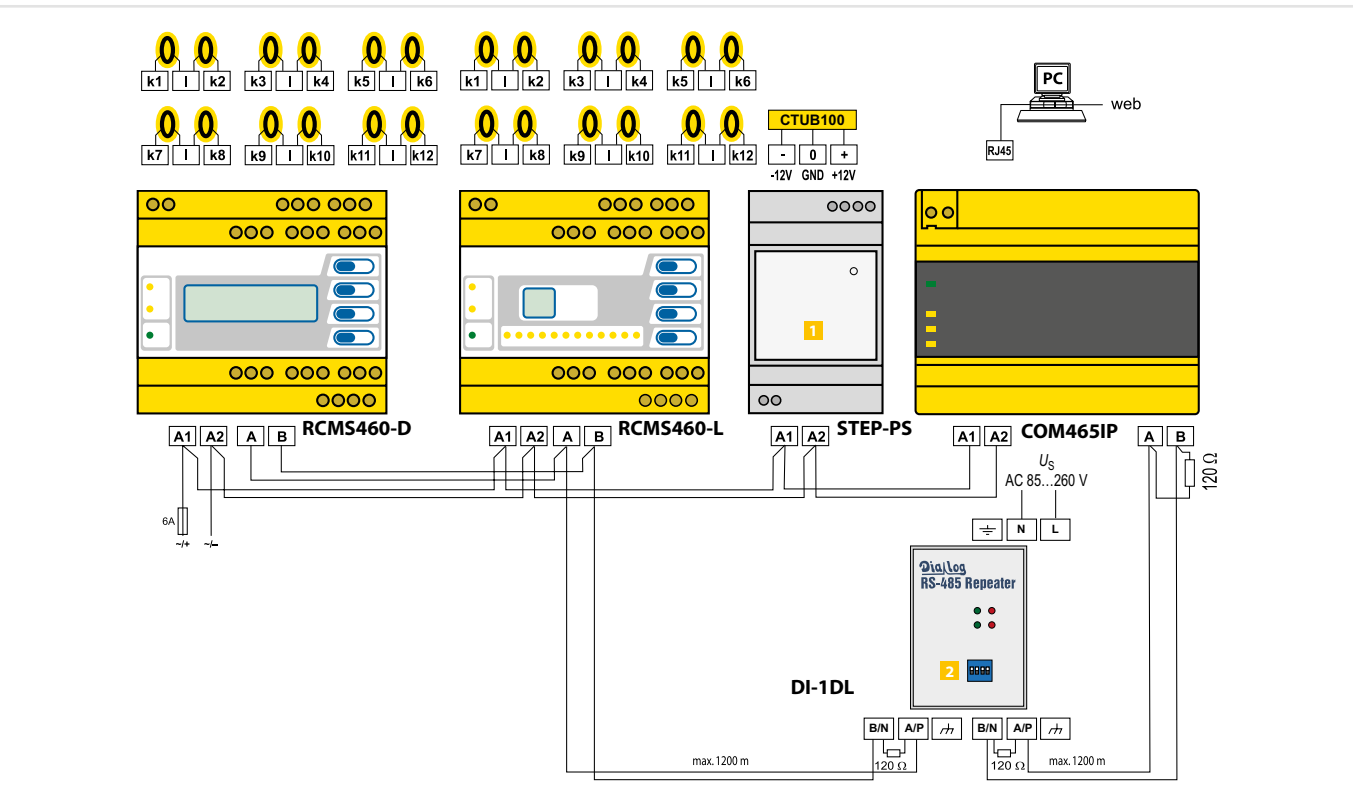

Note:

1 When usingAC/DC current sensitive measuring current transformers of the CTUB100 and CTBS25 series , a DC 24 V power supply unit (e.g. STEP-PS series) is required to supply the measuring current transformers with voltage. For this purpose, the technical data of the respective measuring current transformer series must be observed.

2 The DI-1DL repeater only is required when the length of the cable exceeds 1200 m.

LINETRAXX® RCMS150 series

Residual current monitor type B with integrated measuring current transformers
for unearthed AC/DC systems (TN and TT systems)

Typical applications

- Residual current monitoring system for current outlets and final circuits
- Monitoring residual currents of stationary electrical installations and equipment to determine practice-oriented test intervals in accordance with DGUV Regulation 3 (German Social Accident Insurance) and BetrSichV (Occupational Safety and Health Regulation)
- EMC monitoring of TN-S systems for „stray" currents and additional unwanted N-PE bridges
- Monitoring currents regarded as fire hazards in flammable atmospheres
- Monitoring the PE to ensure that there is no current flow

Device features

- Continuous residual current monitoring in compliance with DGUV Vorschrift 3 (German Social Accident Insurance Regulation 3)
- AC/DC sensitive residual current monitor type B with 6 channels K1…6 (each channel features 2 measuring channels: 1 x r.m.s., 1 x DC)
- Ideal for applications with space limitations
- Easy DIN rail or screw mounting to standard distribution panels
- 2 separately adjustable response values (RMS or DC) per channel
- Continuous self monitoring
- Fully shielded measuring current transformers to avoid external influences due to magnetic fields that may cause disturbances
- Compatible with Bender gateways of type COM465IP, CP9…
- **RCMS150** (RS-485 interface with BMS protocol)
  - In the system network compatible with RCMS460/490
  - Address range 2…90, can be set directly on the unit
  - Up to 89 RCMS150 can be used on the bus
- **RCMS150-01** (RS-485 interface with Modbus RTU protocol)
  - In the system network, compatible with other Modbus RTU-capable device series from Bender, including the RCMB300 series and RCMB13…-01
  - Address range1…99 can be set directly on the unit by means of a detent potentiometer
  - Address range1…247 adjustable via the bus
  - Up to 247 RCMS150-01 can be used on the bus

Further information

For further information refer to our product range on www.bender.de.

Approvals

only B94053025

LR in preparation

Ordering information

Type	Supply voltage U_S	Protocol	Art. No.
RCMS150	DC 24 V	BMS	B94053025
RCMS150-01		Modbus RTU	B94053026

Accessories

Description	Art. No.
Mounting clip for DIN rail mounting	B91080110

Suitable system components

Description	RCMS 150	RCMS 150-01	Type	Art. No.	Page
Power supply	✓	✓	STEP-PS	B940531…	**381**
Condition Monitor with integrated gateway	✓	✓	COM465IP[1]	B95061065	**394**
Condition Monitor	✓	✓	CP9…-I	B9506103…	**408**
RS-485 repeater	✓	✓	DI-1DL	B95012047	**389**
Residual current monitor[2]	✓	–	RCMS460-D	B940530…	**176**
			RCMS490-D	B940530…	**176**

[1] from function module C
[2] In this case no Condition Monitor/Gateway necessary.
Suitable for measured value and alarm indication only, not suitable for parameter setting

Insulation coordination according to IEC 60664-1

The data are valid for the monitored primary circuit to the output circuit	
Primary circuit	Primary conductors routed through the transformer
Output circuit	(+, –, A, B)
Rated insulation voltage	300 V
Overvoltage category	III
Rated impulse withstand voltage monitored circuit/output circuit	4 kV
Range of use	≤ 2000 m AMSL
Rated insulation voltage	250 V
Pollution degree	3
Insulation	
To achieve double insulation (DI) for overvoltage category III, insulated primary conductors with sufficient rated voltage must be used on the application side.	
BI	Overvoltage category III
DI	Overvoltage category II
Voltage test acc. to IEC 61010-1	AC 2.2 kV

Power supply

Nominal supply voltage U_s with galvanic separation	DC 24 V
Operating range U_s	±20 %
Power consumption	< 4 W

Residual current measuring range

Frequency range	0…2000 Hz
Measuring range	±500 mA
Resolution measured value	1 % of the set response value

Response values

Residual current $I_{\Delta N2}$	RMS 0…300 mA (30 mA)*
Residual current $I_{\Delta N2}$	DC 3…300 mA (6 mA)*
Ratio $I_{\Delta N2}$ RMS/$I_{\Delta N2}$ DC	0.2…5
Prewarning $I_{\Delta N1}$ RMS/DC	50…100 % of $I_{\Delta N2}$ (50 %)*
Response tolerance $I_{\Delta N2}$	
DC 10…500 Hz	-20…0 %
500 Hz…1 kHz	-20…+100 %
Hysteresis	10…25 % (15 %)

Time response

Start-up delay $t_{start\text{-}up}$	0.5…600 s (0.5 s)*
Response delay	
t_{on1} RMS/DC	0…600 s (0 s)*
t_{on2} RMS/DC	0…600 s (0 s)*
Delay on release	
t_{off} DC	0…600 s (1 s)*

Indication (LEDs)

ON	green
ALARM K1…6	yellow

Interface

Interface/protocol	RS-485
Connection	terminals A/B
Cable	Shield on one side connected to PE
recommended:	CAT6/CAT7 min. AWG 23
alternative:	twisted pair, J-Y(St)Y min. 2x0,8
Bus terminating resistor external	(2x) 120 Ω (0.25 W)
Protocol	BMS
Cable length	≤ 1200 m
Device address	2…90 (2)*
Protocol	Modbus RTU
Cable length	≤ 1200 m
Device address	1…247 (last 2 digits of serial number + 100)*

Environment/EMC

EMC	
Immunity	IEC 62020-1
Emission	IEC 62020-1
Operating temperature	-25…+70 °C
for UL applications	-25…+65 °C

Classification of climatic conditions acc. to IEC 60721 (related to temperature and relative humidity)**:**

Stationary use (IEC 60721-3-3)	3K22
Transport (IEC 60721-3-2)	2K11
Long-term storage (IEC 60721-3-1)	1K22

Classification of mechanical conditions acc. to IEC 60721:

Stationary use (IEC 60721-3-3)	3M11
Transport (IEC 60721-3-2)	2M4
Long-term storage (IEC 60721-3-1)	1M12

Connection

Connection type	pluggable double push-wire terminal
Connection properties:	
rigid, flexible/conductor sizes	0.2…1.5 mm² (AWG 24-16)
Multi-conductor connection (2 conductors with the same cross section):	
rigid	0.2…1.5 mm²
flexible	0.2…1.5 mm²
flexible with ferrule without plastic sleeve	0.25…1.5 mm²
flexible with ferrule with plastic sleeve	0.25…0.75 mm²
Stripping length	10 mm

Other

Operating mode	continuous operation
Position of normal use	any
Enclosure material	polycarbonate
Flammability class	UL94 V-0
Screw mounting to standard distribution panels with 12 TE	2 x M6
DIN rail mounting	mounting clip (accessories)
Tightening torque	1.5 Nm
Documentation number	D00259
Weight	170 g

Measuring current transformer

Diameter cable gland	10 mm
Load current	32 A

Bus parameter

Alarm	threshold value exceeded, system fault
Measured value	measured value, DC component, RMS (resolution 0.1 mA)
Times	response delay, delay on release, start-up delay

( )* = factory settings

Dimension diagrams (dimensions in mm)

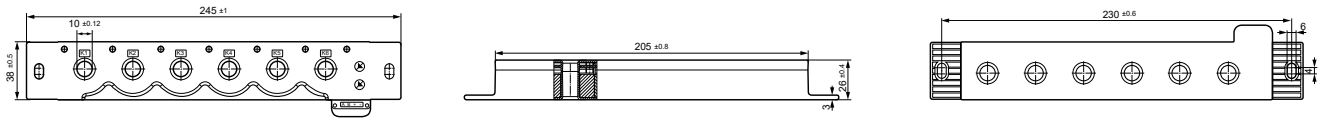

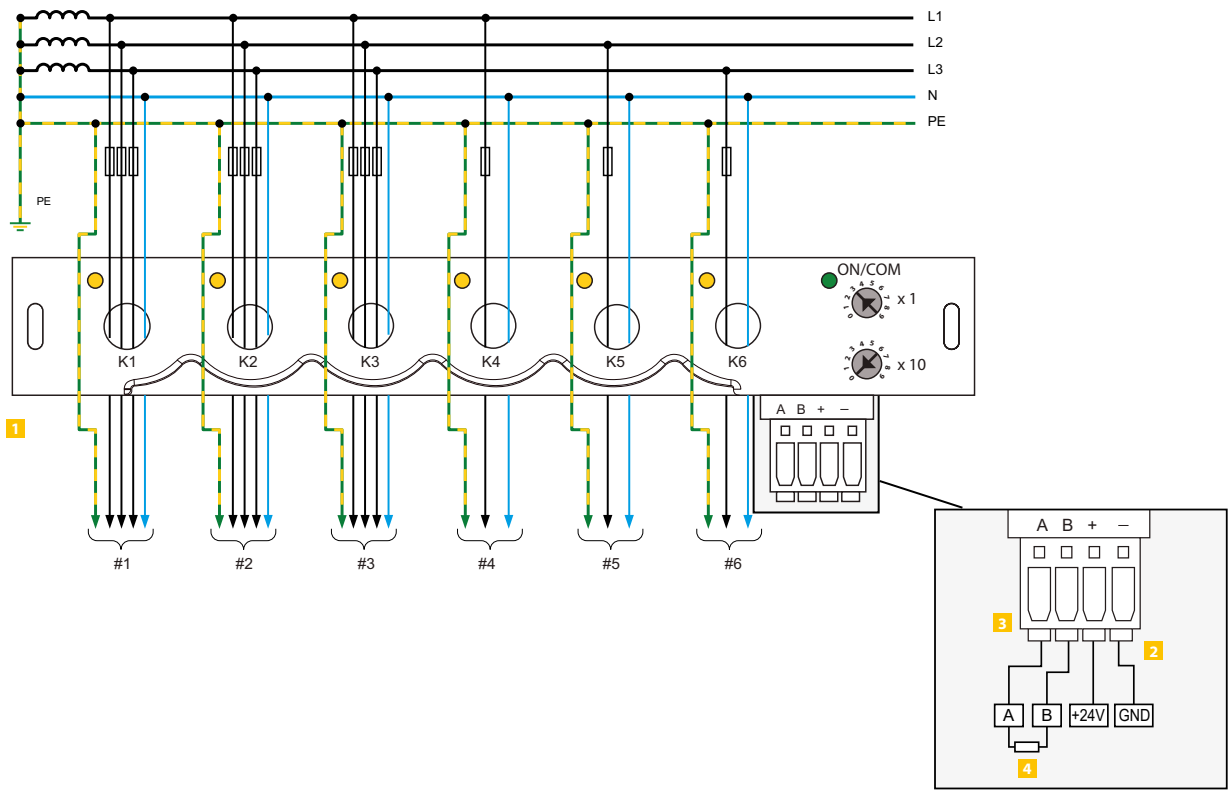

1 Residual current monitor RCMS150

2 Supply voltage *Us* DC 24 V

3 RS-485 interface with BMS bus (Modbus RTU on request)

4 Terminating resistor (required at the beginning and at the end of the bus)

Note:
Only insulated primary conductors suited for the indicated rated voltages are to be used!

LINETRAXX® MRCDB423

Modular residual current device type B for additional protection (protection against indirect contact) in earthed systems (TN and TT systems)

Typical applications

- Additional protection (protection against indirect contact) in earthed systems (TN and TT systems)

Approvals

Device features

- AC/DC sensitive MRCD type B in accordance with IEC 60947-2 Annex M
- Use as modular residual current protective device for additional protection in earthed systems
- Operating characteristic type B in accordance with IEC 60755
- RMS value measurement of the residual current
- Alarm and prewarning indication via display and LEDs
- Alarm and prewarning output via relays (K1/K2)
- Control of a switching element with isolating properties via relay K2
- Measuring current transformer connection monitoring
- Fault memory

Further information

For further information refer to our product range on www.bender.de.

Ordering information

MRCDB423

Type	Supply voltage U_s[1]	Response range $I_{\Delta n}$	Rated frequency	Art. No.
MRCDB423-D-1	DC 9.6…94 V / AC 42…460 Hz, 16…72 V	30 mA…3 A	0…2000 Hz	B94043055
MRCDB423-D-2	DC 70…300 V / AC 42…460 Hz, 70…300 V			B94043056

[1] Absolute values of the voltage range

External measuring current transformers

Type	CT diameter	Shield	Art. No.	Page
CTUB101-CTBC20	ø 20	–	B78120010	**345**
CTUB101-CTBC20P		✓	B78120020	**345**
CTUB101-CTBC35	ø 35	–	B78120012	**345**
CTUB101-CTBC35P		✓	B78120022	**345**
CTUB101-CTBC60	ø 60	–	B78120014	**345**
CTUB101-CTBC60P		✓	B78120024	**345**

Type	CT diameter	Shield	Art. No.	Page
CTUB101-CTBC120	ø 120	–	B78120016	**345**
CTUB101-CTBC120P		✓	B78120026	**345**
CTUB101-CTBC210	ø 210	–	B78120018	**345**
CTUB101-CTBC210P		✓	B78120028	**345**

Insulation coordination acc. to IEC 60664-1/IEC 60664-3

MRCDB423-D-1:

Rated voltage	100 V
Overvoltage category/pollution degree	III/2
Rated impulse voltage	2.5 kV

MRCDB423-D-2:

Rated voltage	250 V
Overvoltage category/pollution degree	III/2
Rated impulse voltage	4 kV
Protective separation (reinforced insulation) between	(A1, A2) - (k, l, T/R) - (11, 12, 14) - (21, 22, 24)
Voltage tests acc. to IEC 61010-1	2.21 kV

Supply voltage

MRCDB42-D-1:

Supply voltage range U_s	AC 24…60 V/DC 24…78 V
Operating range supply voltage U_s	AC 16…72 V/DC 9.6…94 V
Frequency range U_s	DC, 42…460 Hz

MRCDB423-D-2:

Supply voltage range U_s	AC/DC 100…250 V
Operating range supply voltage U_s	AC/DC 70…300 V
Frequency range U_s	DC, 42…460 Hz
Power consumption	≤ 6.5 VA

Measuring circuit

External measuring current transformer type	CTUB101-CTBCxx(P); CTUB101-CTBCxxx(P)
Rated voltage (measuring current transformer)	800 V
Operating characteristic type B in accordance with IEC 60755	type B
Rated frequency	0…2000 Hz
Operating uncertainty	0…35 %

Response values

Rated residual operating current $I_{\Delta n1}$	50…100 % of $I_{\Delta n2}$ (50 %)*
Rated residual operating current $I_{\Delta n2}$	30 mA…3 A (30 mA)*

Time response

Start-up delay t	(1 s)*
Response delay t_{on1}	0…10 s (1 s)*
Response delay t_{on2}	0…10 s (0 s)*
Operating time t_{ae} at $I_{\Delta n} = 1 \times I_{\Delta n1/2}$	≤ 180 ms
Operating time t_{ae} at $I_{\Delta n} = 5 \times I_{\Delta n1/2}$	≤ 23 ms
Response time t_{an}	$t_{an} = t_{ae} + t_{on1/2}$
Recovery time t_b	≤ 300 ms

Displays, memory

Display range measured value AC/DC	0…6 A
Error of measured value indication	±17.5 %/±2 digits
Measured-value memory for alarm value	Data record measured values
Password	off/0…999 (on)*
Fault memory output relay	yes

Inputs/outputs

Cable length for external test/reset button	0…3 m
Cable length for measuring current transformer connection	0…3 m

Switching elements

Number of switching elements	2 x 1 changeover contact
Operating principle	N/C operation
Electrical endurance, number of cycles	10000

Contact data acc. to IEC 60947-5-1:

Utilisation category	AC-13	AC-14	DC-12	DC-12	DC-12
Rated operational voltage	230 V	230 V	24 V	110 V	220 V
Rated operational voltage UL	200 V	200 V	24 V	110 V	200 V
Rated operational current	5 A	3 A	1 A	0.2 A	0.1 A
Minimum contact rating	1 mA at AC/DC ≥ 10 V				

Environment/EMC

EMC	IEC 60947-2 annex M (limit value class A according to CISPR11)
Operating temperature	-25...+55 °C
Transport	-25…+70 °C
Long-term storage	-25…+55 °C

Classification of climatic conditions acc. to IEC 60721 (related to temperature and relative humidity)**:**

Stationary use (IEC 60721-3-3)	3K22
Transport (IEC 60721-3-2)	2K11
Long-term storage (IEC 60721-3-1)	1K22

Classification of mechanical conditions acc. to IEC 60721

Stationary use (IEC 60721-3-3)	3M11
Transport (IEC 60721-3-2)	2M4
Long-term storage (IEC 60721-3-1)	1M12

Connection

Connection type	screw-type terminals
Connection properties:	
Rigid/flexible	0.2…4/0.2…2.5 mm² (AWG 24-12)
Multi-conductor connection (2 conductors with the same cross section):	
Rigid/flexible	0.2…1.5/0.2…1.5 mm²
Stripping length	8…9 mm
Tightening torque	0.5…0.6 Nm

Other

Operating mode	continuous operation
Position of normal use	display-oriented
Degree of protection, internal components (IEC 60529)	IP30
Degree of protection, terminals (IEC 60529)	IP20
Enclosure material	polycarbonate
Flammability class	UL94V-0
DIN rail mounting acc. to	IEC 60715
Screw fixing	2 x M4 with mounting clip
Documentation number	D00396
Weight	≤ 150 g

( )* = Factory setting

Dimension diagram (dimensions in mm)

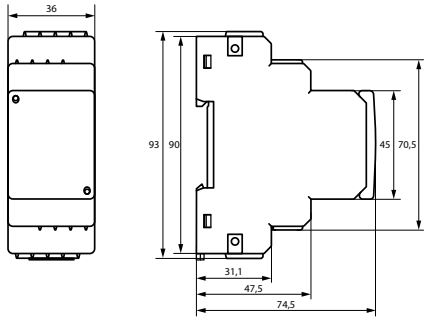

Dimension diagram CTUB10…-CTBC…

A

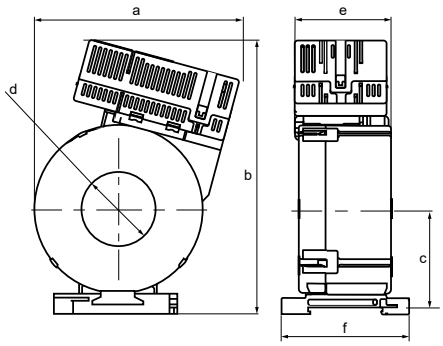

B

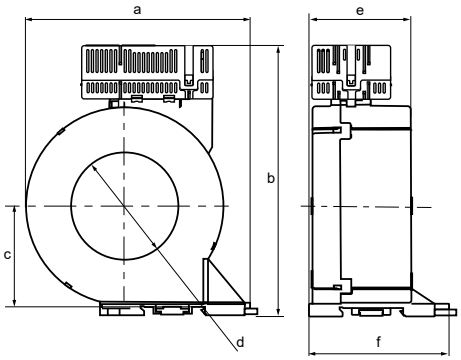

C

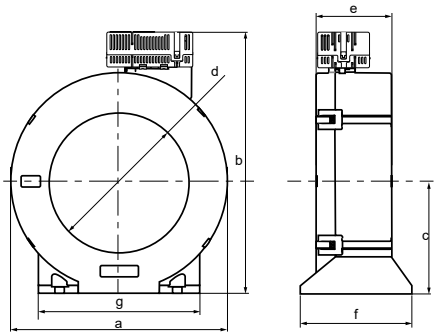

D

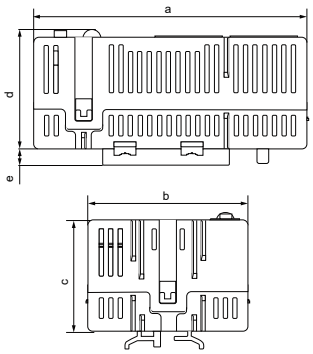

Dimensions (mm)								
	Type	**a**	**b**	**c**	**d**	**e**	**f**	**g**
A	CTUB10…-CTBC20(P)	75	83	37	ø 20	46	60,5	–
	CTUB10…-CTBC35(P)	97	130	47	ø 35	46	61	–
B	CTUB10…-CTBC60(P)	126	151	57	ø 60	56	78	–
C	CTUB10…-CTBC120(P)	188	225	96	ø 120	65	96	139
	CTUB10…-CTBC210(P)	302	339	153	ø 210	67	113	277
D	CTUB10…	74	44	30	32	4,6	–	–

Tolerance:: ±0,5 mm

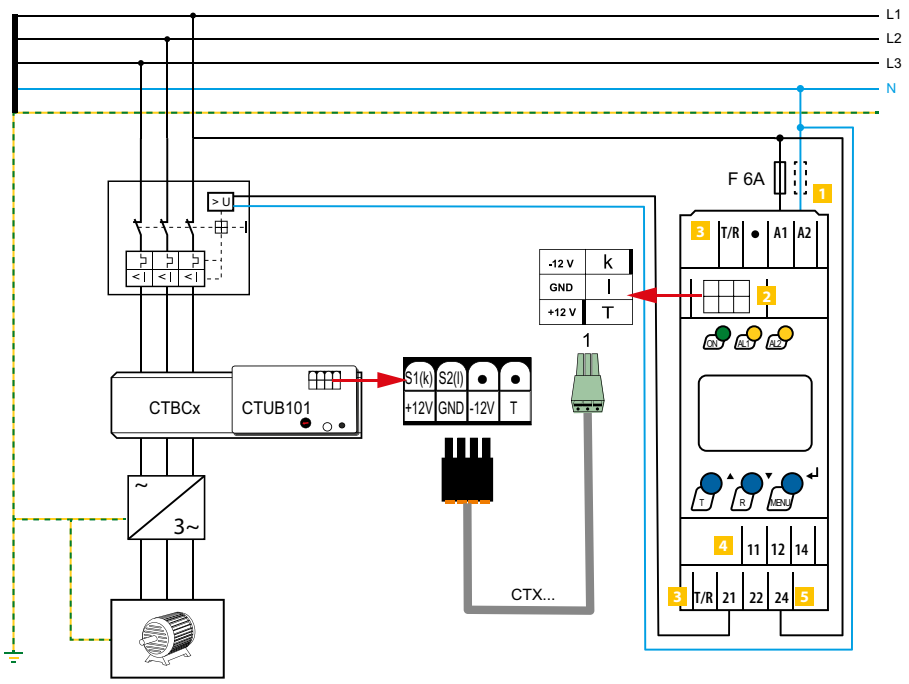

1	**A1, A2**	Connection to supply voltage U_s	4	**11, 12, 14**	Alarm relay K1 (alarm)
2	**1**	Socket for connection cable of measuring current transformer	5	**21, 22, 24**	Alarm relay K2
3	**T/R**	Connection for a combined external test and reset button			

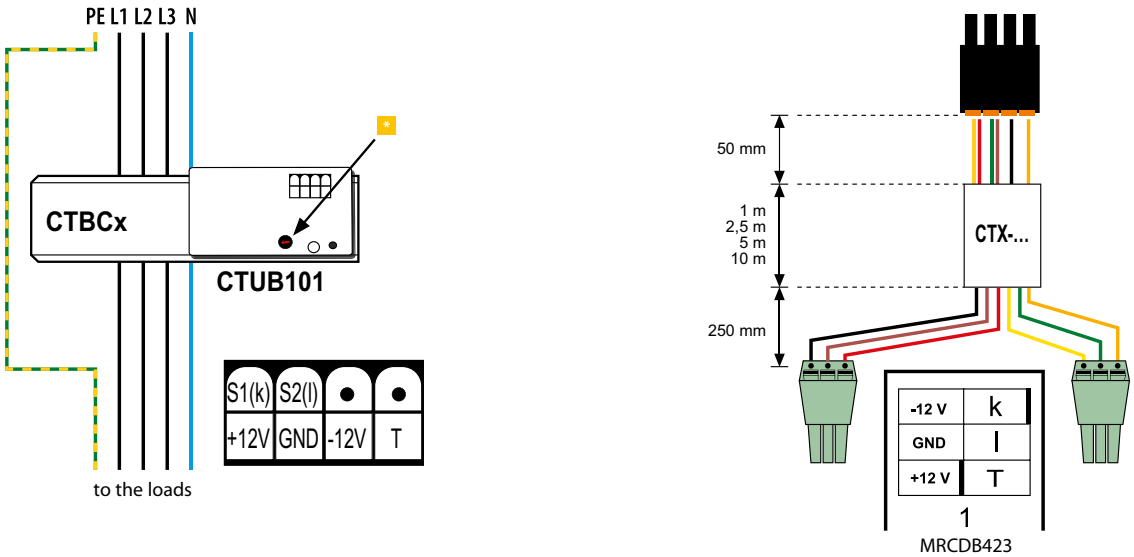

* The measuring range must be set according to the response value in the evaluator.

LINETRAXX® MRCDB300 series

AC/DC sensitive residual current monitoring modules for MRCD applications

Typical applications

- for MRCD applications

Approvals

Device features

- Structure of a protective device in accordance with IEC 60947-2 Annex M in combination with a circuit breaker providing isolating properties
- Monitoring of the connected circuit breaker by means of contact feedback
- RS-485 interface with Modbus RTU (reading out measured values/setting parameters)
- Integrated switching outputs with two changeover contacts K1 and K2 (galvanically isolated)
- Fulfils the protection goals protection of persons, fire protection and plant protection (depending on the variant)
- Frequency range DC…100 kHz
- Combined test and reset button
- Multicolour LED indicating operation, exceeded response value, disturbances and status messages
- AC/DC sensitive type B measured value acquisition acc. to IEC 60755
- AC/DC sensitive type B+ measured value acquisition acc. to VDE 0664-400
- Exchangeable electronic enclosure without mechanical separation of the primary conductors
- Extension/retrofitting or modification of functionalities in case of changed monitoring requirements
- Insensitive to load currents due to full magnetic shield (CTBC20P…210P only)
- Connection monitoring of the measuring current transformer with cyclical test current
- Use of all MRCDB300 for all CTBC… measuring current transformer sizes
- Supply voltage DC 24

Standards

The variants B74043120, B74043121 and B74043122 of the MRCDB300 series comply with the requirements of the standard:

- DIN EN 45545-2.

Further information

For further information refer to our product range on www.bender.de.

Ordering information

Electronic modules

Type	Supply voltage U_s	Variant	Art. No.
MRCDB301	DC 24 V (19.2…28.8 V)	Protection of persons	B74043120
MRCDB302		Fire protection	B74043121
MRCDB303		Protection of persons, fire protection and plant protection (freely configurable)	B74043122
MRCDB305		Protection of persons for applications with pulsed, very high peak load currents (> 1 kA for < 1 s), e.g. welding applications	B74043125

Required terminals are included in the scope of delivery.

Measuring current transformers

Type	Internal diameter	Art. No.
CTBC20	20 mm	B98120001
CTBC20P		B98120002
CTBC35	35 mm	B98120003
CTBC35P		B98120004
CTBC60	60 mm	B98120005
CTBC60P		B98120006
CTBC120	120 mm	B98120007
CTBC120P		B98120020
CTBC210	210 mm	B98120008
CTBC210P		B98120021

P = full magnetic shield

Accessories

Description	Art. No.
Interface converter USB to RS-485	B95012045
Terminal block for MRCD module[1)]	B74043124
Snap-on mounting for CTBC20 and CTBC20P[1)]	B91080111
Snap-on mounting for CTBC35 and CTBC35P[1)]	B91080112

[1)] Included in scope of delivery

Suitable system components

Description	max. connected current transformers	Type	Art. No.	Page
Voltage supply	14	STEP-PS/1 AC/24 DC/1.75	B94053111	**381**
	34	STEP-PS/1 AC/24 DC/4.2	B94053112	**381**

Insulation coordination acc. to IEC 60664-1/IEC 60664-3

Definitions:	
Measuring circuit (IC1)	Primary conductors routed through the current transformer
Secondary (IC2)	Terminal block 1 (24 V, GND, D1, DG, T/R, GND, A, B, X1, X2)
Control circuit 1 (IC3)	Terminal block 2 (11,12,14)
Control circuit 2 (IC4)	Terminal block 3 (21,22,24)
Rated insulation voltage	800 V
Overvoltage category	III
Area of application	≤ 2000 m AMSL
Rated impulse voltage:	
IC1((IC2-IC4)	8 kV
IC2/(IC3-IC4)	4 kV
IC3/IC4	4 kV
Rated insulation voltage:	
IC1/(IC2-IC4)	800 V
IC2/(IC3-IC4)	250 V
IC3/IC4	250 V
Pollution degree	2
Safe isolation (reinforced insulation) between:	
IC2/(IC3-IC4)	300 V
Basic insulation between:	
IC1/(I2-IC4)	800 V
IC3/IC4	300 V
Voltage test (routine test) acc. to IEC 61010-1:	
IC2/(IC3-IC4)	AC 2.2 kV
IC3/IC4	AC 2.2 kV

Supply voltage

Supply voltage U_s	DC 24 V
Operating range of U_s	±20 %
Ripple U_s	≤ 1 %
Power consumption	≤ 2.5 W
Inrush current	1.7 A for 1 ms

Measuring circuit

Internal diameter measuring current transformer	see dimension diagrams page 193
Characteristics according to IEC 62020 and IEC/TR 60755	AC/DC sensitive, type B
Measuring range	5 mA…20 A
Response value $I_{\Delta n}$	see frequency responses in manual
MRCDB301 (protection of persons)	30 mA
MRCDB302 (fire protection)	300 mA
MRCDB303 (plant protection)	30 mA…3 A (freely configurable), (30 mA)*
MRCDB305 (protection of persons)	30 mA
Prewarning	50 %…100 % $I_{\Delta n}$ (freely configurable), (60 %)*
Rated current I_n	
CTBC20 at $I_{\Delta n}$ = 30 mA	40 A
CTBC20 at $I_{\Delta n}$ = 300 mA	63 A
CTBC20P	80 A
CTBC35 at $I_{\Delta n}$ = 30 mA	80 A
CTBC35 at $I_{\Delta n}$ = 300 mA	125 A
CTBC35P	160 A
CTBC60 at $I_{\Delta n}$ = 30 mA	160 A
CTBC60 at $I_{\Delta n}$ = 300 mA	250 A
CTBC60P	320 A
CTBC120 at $I_{\Delta n}$ = 100 mA	330 A
CTBC120P at $I_{\Delta n}$ = 100 mA	630 A
CTBC210 at $I_{\Delta n}$ = 300 mA	630 A
CTBC210P at $I_{\Delta n}$ = 100 mA	630 A
CTBC210P at $I_{\Delta n}$ = 300 mA	1000 A
Operating uncertainty	±17.5 %
Relative uncertainty	0…-35 %
Test winding	yes

Possible response values (to be set on the evaluator)

CTBC20, CTBC20P	10…500 mA
CTBC35, CTBC35P, CTUBC60, CTBC60P	30 mA…10 A
CTBC120P, CTBC210P	100 mA…10 A
CTBC120, CTBC210	300 mA…10 A

Time response

Response delay t_{on}	
MRCDB301, MRCDB302, MRCDB305	0 s
MRCDB303	0 s…60 min (freely configurable), (0 s)*
Start-up delay t_{an}	0 s…60 min (freely configurable), (0 s)*
Delay on release t_{off}	2 s after reset
Operating time t_{ae}	
at 1 x $I_{\Delta n}$	≤ 180 ms
at 2 x $I_{\Delta n}$	≤ 130 ms
at 5 x $I_{\Delta n}$	≤ 20 ms
Response time	$t_{an} = t_{ae} + t_{on}$
Recovery time t_b	≤ 1 s

Indication

Multicolour LED	red/green, see table "System states: LED and output relays" on page 192

Inputs

	T/R, GND, D1, DG
Maximum length connecting cable	10 m

Outputs

Number of changeover contacts	2
Operating principle	
MRCDB301, MRCDB302, MRCDB305	N/C principle
MRCDB303	N/C principle or N/O principle, (freely configurable), (N/C principle)*
Switching outputs (K1, K2)	250 V, 5 A
Switching capacity	1500 VA/144 W

Contact data acc. to IEC 60947-5-1

Utilisation category	AC-13	AC-14	DC-12	DC-12	DC-12
Rated operational voltage	250 V	250 V	24 V	110 V	220 V
Rated operational current	5 A	3 A	1 A	0.2 A	0.1 A
(for UL applications)	3 A	3 A			
Minimum current	10 mA at DC 5 V				
Electrical endurance, number of cycles	10,000				

Environment/EMC

EMC	IEC 60947-2 Annex M
Operating temperature	-25…70 °C

Classification of climatic conditions acc. to IEC 60721 (related to temperature and relative humidity)**:**

Stationary use (IEC 60721-3-3)	3K22
Transport (IEC 60721-3-2)	2K11
Long-term storage (IEC 60721-3-1)	1K22

Classification of mechanical conditions acc. to IEC 60721

Stationary use (IEC 60721-3-3)	3M11
Transport (IEC 60721-3-2)	2M4
Long-term storage (IEC 60721-3-1)	1M12

Connection

Required terminals are included in the scope of delivery.

Terminal block 1

Manufacturer	Phoenix Contact
Type	DFMC 1.5/5-ST-3.5 BK
The connection conditions of the manufacturer apply.	
Connection properties	
rigid	0.2…1.5 mm² (AWG 24-16)
flexible	0.2…1.5 mm² (AWG 24-16)
with ferrule	0.25…0.75 mm² (AWG 24-19)

Terminal block 2, 3

Manufacturer	Phoenix Contact
Type	FKCVW 2.5/ 3-ST-5.08
The connection conditions of the manufacturer apply.	
Connection capacity	
rigid	0.2…2.5 mm² (AWG 24-13)
flexible	0.2…2.5 mm² (AWG 24-13)
with ferrule	0.25…2.5 mm² (AWG 24-13)

Mounting CTBC…

Screw type	
CTBC20…60(P)	DIN EN ISO 7045 - M5
CTCB120…210(P)	DIN EN ISO 7045 - M6
Washer type	
CTBC20…60(P)	DIN EN ISO 7089/7090 - 5
CTCB120…210(P)	DIN EN ISO 7089/7090 - 6
Tightening torque	
CTBC20…35 (P)	0.6 Nm
CTCB60…210(P)	1 Nm

Other

Operating mode	continuous operation
Mounting	any position
Degree of protection, internal components (DIN EN 60529)	IP40
Degree of protection, terminals (DIN EN 60529)	IP20
Flammability class	UL94 V-0
Software	D0579
Documentation number	D00343
Weight	
MRCDB300	≤ 100 g
CTBC20	≤ 160 g
CTBC20P	≤ 220 g
CTBC35	≤ 240 g
CTBC35P	≤ 320 g
CTBC60	≤ 460 g
CTBC60P	≤ 620 g
CTBC120	≤ 1390 g
CTBC120P	≤ 1750 g
CTBC210	≤ 4220 g
CTBC210P	≤ 4870 g

( )* Factory setting

The use of the power supply units listed at "Accessories" is recommended.
The use of a surge protection device is mandatory for these power supply units.

Dimension diagram

A

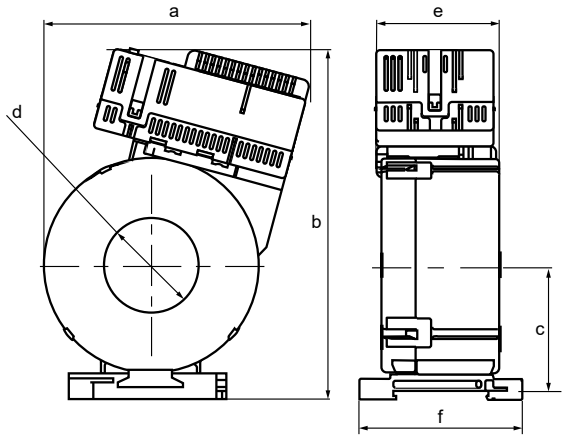

B

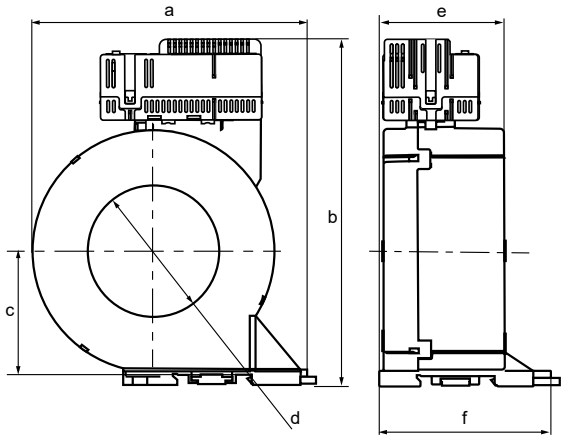

C

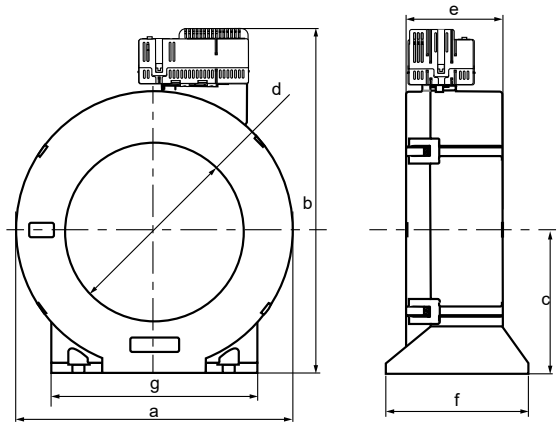

D

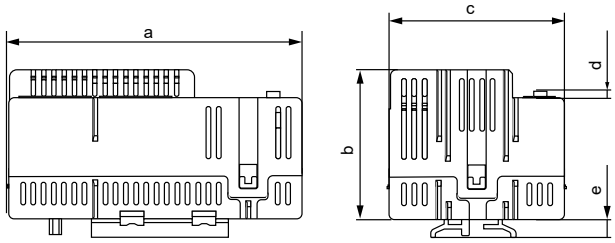

Dimensions (mm)								
	Type	**a**	**b**	**c**	**d**	**e**	**f**	**g**
A	MRCDB30…-CTBC20(P)	81	112	37	ø 20	46	60	–
	MRCDB30…-CTBC35(P)	97	130	47	ø 35	46	61	–
B	MRCDB30…-CTBC60(P)	126	158	57	ø 60	56	78	–
C	MRCDB30…-CTBC120(P)	188	232	96	ø 120	65	96	139
	MRCDB30…-CTBC210(P)	302	346	153	ø 210	67	113	277
D	MRCDB30…	74	37	44	2	4,6	–	–

Tolerance: ±0.5 mm

System states: LED and output relays

The LED indicates the system state by means of colours and lighting/flashing. The N/O contacts of relay outputs K1 and K2 have defined switching positions for each system state.

System state	LED		Notes	Changeover contact	
	green (ON)	red (alarm)		K1	K2
Device switched off	off	off	Device is deenergised, no monitoring, no monitoring function	de-energised	de-energised
Normal operating state	lights	off	The device is supplied with the specified voltage and monitors the primary circuit. No residual current flows which would lead to tripping.	energised	energised
Prewarning	lights	Flashes briefly	The device is supplied with the specified voltage and monitors the primary circuit. A fault current flows which exceeds the set limit of the prewarning.	de-energised	energised
Alarm state	off	lights	The device is supplied with the specified voltage and monitors the primary circuit. A fault current flows which exceeds the set limit of the alarm.	de-energised	de-energised

N/C principle

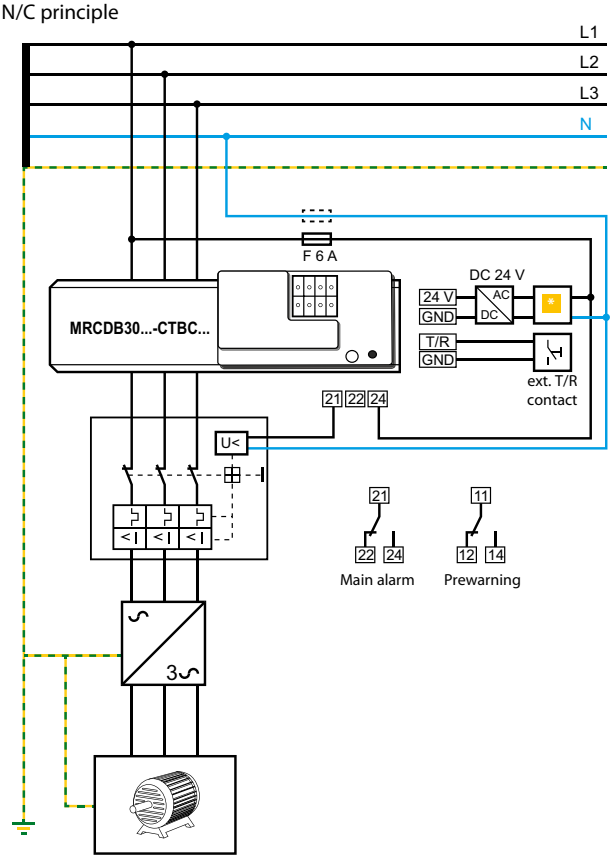

N/C principle, contact feedback

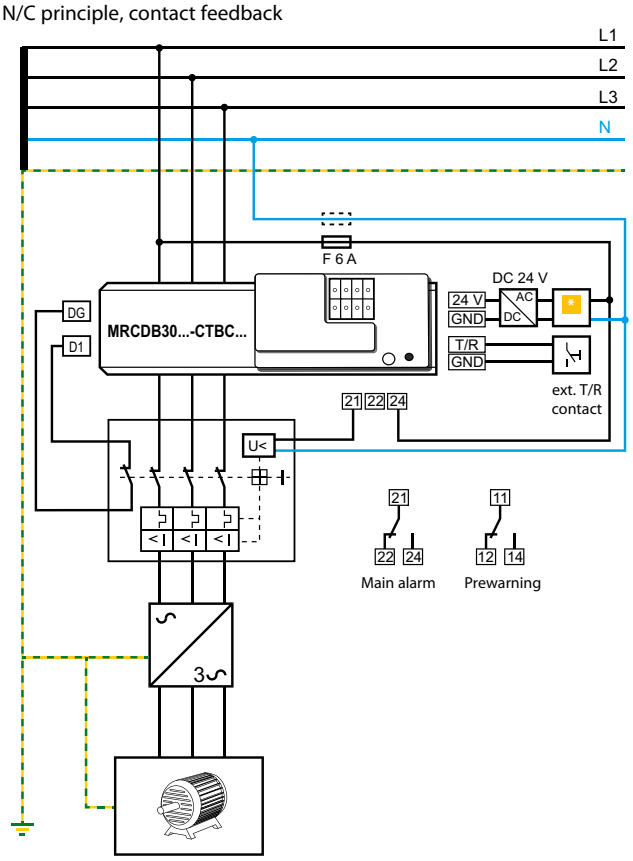

N/O principle

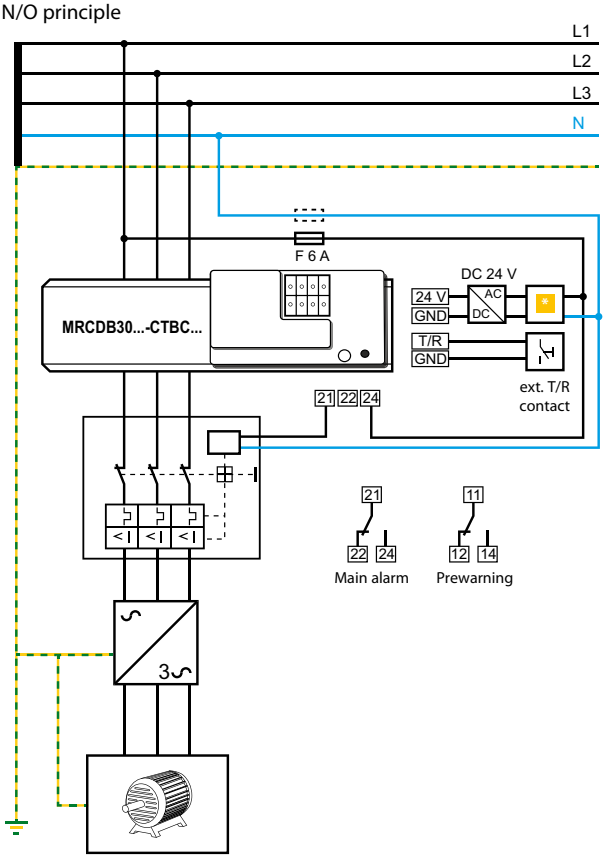

N/O principle, contact feedback

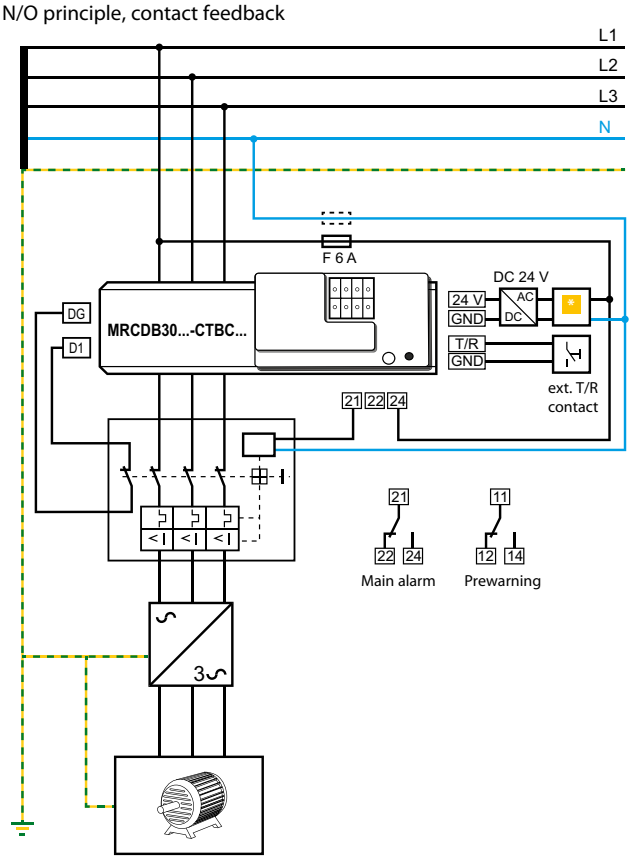

* – The use of a type 2 surge protection device (SPD) is mandatory due to possible impulse voltages and in order to comply with normative requirements.

– The surge protection device must be connected upstream of the power supply unit on the supply side.

– Features of the surge protection device:
Nominal discharge current I_n (8/20 µs): 20 kA
Response time: 25 ns
two-stage: 1 varistor + 1 spark gab
Alternatively, the power supply unit must be connected to a CAT II supply without a surge protection device.

LINETRAXX® RCMB300 series

AC/DC sensitive residual current monitoring modules with an integrated measuring current transformer

Typical applications

- AC and DC fault currents in earthed systems (TN and TT systems).

Approvals

UL File number: E493737, E173157

Device features

- Continuous residual current monitoring in compliance with DGUV Vorschrift 3 (German Social Accident Insurance Regulation 3)
- Easy DIN rail or screw mounting
- RS-485 interface with Modbus RTU (reading out measured values/setting parameters)
- Integrated switching outputs with two changeover contacts K1 and K2 (galvanically isolated)
- Frequency range DC…100 kHz
- Combined test and reset button
- Multicolour LED indicating operation, exceeded response value, disturbances and status messages
- AC/DC sensitive type B measured value acquisition acc. to IEC 60755
- AC/DC sensitive type B+ measured value acquisition acc. to VDE 0664-400
- The AC and DC components as well as the r.m.s. value of the residual current can be evaluated separately
- Exchangeable electronic enclosure without mechanical separation of the primary conductors
- Extension/retrofitting or modification of functionalities in case of changed monitoring requirements
- Insensitive to load currents due to full magnetic shield (CTBC…**P** only)
- Connection monitoring of the measuring current transformer with cyclical test current
- Use of the RCMB301 for all CTBC… measuring current transformer sizes
- Supply voltage DC 24 V

Further information

For further information refer to our product range on www.bender.de.

Ordering information

Evaluation electronics

Type	Supply voltage U_s	Variant	Art. No.
RCMB301	DC 24 V (19.2…28.8 V)	Modbus RTU	B74043100

Required terminals are included in the scope of delivery.

Measuring current transformers

Type	Internal diameter	Art. No.
CTBC20	20 mm	B98120001
CTBC20P		B98120002
CTBC35	35 mm	B98120003
CTBC35P		B98120004
CTBC60	60 mm	B98120005
CTBC60P		B98120006
CTBC120	120 mm	B98120007
CTBC120P		B98120020
CTBC210	210 mm	B98120008
CTBC210P		B98120021

P = full magnetic shield

Accessories

Description	Art. No.
Interface converter USB to RS-485	B95012045
Terminal block for RCMB301 module[1)]	B74043124
Snap-on mounting for CTBC20 and CTBC20P[1)]	B91080111
Snap-on mounting for CTBC35 and CTBC35P[1)]	B91080112

[1)] Included in scope of delivery

Suitable system components

Description	max. connected current transformers	Type	Art. No.	Page
Voltage supply	4	STEP-PS/1 AC/24 DC/0.5	B94053110	**381**
	14	STEP-PS/1 AC/24 DC/1.75	B94053111	**381**
	34	STEP-PS/1 AC/24 DC/4.2	B94053112	**381**

Insulation coordination acc. to IEC 60664-1/IEC 60664-3

Definitions:	
Measuring circuit (IC1)	Primary conductors routed through the current transformer
Secondary (IC2)	Terminal block 1 (24 V, GND, T/R, GND, A, B, X1, X2)
Control circuit 1 (IC3)	Terminal block 1 (11,12,14)
Control circuit 2 (IC4)	Terminal block 2 (21,22,24)
Rated insulation voltage	800 V
Overvoltage category	III
Area of application	≤ 2000 m AMSL
Rated impulse voltage:	
IC1((IC2-IC4)	8 kV
IC2/(IC3-IC4)	4 kV
IC3/IC4	4 kV
Rated insulation voltage:	
IC1/(IC2-IC4)	800 V
IC2/(IC3-IC4)	250 V
IC3/IC4	250 V
Pollution degree	2
Safe isolation (reinforced insulation) between:	
IC2/(IC3-IC4)	300 V
Basic insulation between:	
IC1/(I2-IC4)	800 V
IC3/IC4	300 V
Voltage test (routine test) acc. to IEC 61010-1:	
IC2/(IC3-IC4)	AC 2.2 kV
IC3/IC4	AC 2.2 kV

Supply voltage

Supply voltage U_s	DC 24 V
Operating range of U_s	±20 %
Ripple U_s	≤ 1 %
Power consumption	≤ 2.5 W
Inrush current	1.7 A for 1 ms

Measuring circuit

Internal diameter measuring current transformer	see dimension diagrams on page 196
Characteristics according to IEC 62020-1 and IEC/TR 60755	AC/DC sensitive, type B
Measuring range	5 mA…20 A
Response value $I_{\Delta n}$	30 mA…3 A (freely configurable), (30 mA)*
Prewarning	50…100 % $I_{\Delta n}$ (freely configurable), (60 %)*
Rated current I_n	
CTBC20 at $I_{\Delta n}$ = 30 mA	40 A
CTBC20 at $I_{\Delta n}$ = 300 mA	63 A
CTBC20P	80 A
CTBC35 at $I_{\Delta n}$ = 30 mA	80 A
CTBC35 at $I_{\Delta n}$ = 300 mA	125 A
CTBC35P	160 A
CTBC60 at $I_{\Delta n}$ = 30 mA	160 A
CTBC60 at $I_{\Delta n}$ = 300 mA	250 A
CTBC60P	320 A
CTBC120 at $I_{\Delta n}$ = 100 mA	330 A
CTBC120P at $I_{\Delta n}$ = 100 mA	630 A
CTBC210 at $I_{\Delta n}$ = 300 mA	630 A
CTBC210P at $I_{\Delta n}$ = 100 mA	630 A
CTBC210P at $I_{\Delta n}$ = 300 mA	1000 A
Operating uncertainty	±17.5 %
Relative uncertainty	0…-35 %
Test winding	yes

Possible response values (to be set on the evaluator)

CTBC20, CTBC20P	10 mA…500 mA
CTBC35, CTBC35P, CTUBC60, CTBC60P	30 mA…10 A
CTBC120P, CTBC210P	100 mA…10 A
CTBC120, CTBC210	300 mA…10 A

Time response

Response delay t_{on}	50 ms…60 min (freely configurable), (0 s)*
Start-up delay t_{an}	0 s…60 min (freely configurable), (0 s)*
Delay on release t_{off}	0 s…60 min (freely configurable), (1 s)*
Operating time t_{ae}	
at 1 x $I_{\Delta n}$	≤ 230 ms
at 2 x $I_{\Delta n}$	≤ 180 ms
at 5 x $I_{\Delta n}$	≤ 70 ms
Response time	$t_{an} = t_{ae} + t_{on}$
Recovery time t_b	≤ 1 s

Indication

Multicolour LED	Refer to "System states: LED and output relays" on page196

Inputs

	T/R, GND

Outputs

Number of changeover contacts	2
Operating principle	N/C or N/O principle (freely configurable), (N/C principle)*
Switching outputs (K1, K2)	250 V, 5 A
Switching capacity	1500 VA/144 W

Contact data acc. to IEC 60947-5-1

Utilisation category	AC-13	AC-14	DC-12	DC-12	DC-12
Rated operational voltage	250 V	250 V	220 V	110 V	24 V
Rated operational current	5 A	3 A	0.1 A	0.2 A	1 A
(for UL applications)	3 A	3 A			
Minimum current					10 mA at DC 5 V
Electrical endurance, number of cycles					10,000

Environment/EMC

EMC	IEC 62020-1:2020
Operating temperature	-25…70 °C

Classification of climatic conditions acc. to IEC 60721 (related to temperature and relative humidity)**:**

Stationary use (IEC 60721-3-3)	3K22
Transport (IEC 60721-3-2)	2K11
Long-term storage (IEC 60721-3-1)	1K22

Classification of mechanical conditions acc. to IEC 60721

Stationary use (IEC 60721-3-3)	3M11
Transport (IEC 60721-3-2)	2M4
Long-term storage (IEC 60721-3-1)	1M12

Connection

Required terminals are included in the scope of delivery.

Terminal block 1

Manufacturer	Phoenix Contact
Type	DFMC 1.5/5-ST-3.5 BK
The connection conditions of the manufacturer apply.	
Connection properties	
rigid	0.2…1.5 mm² (AWG 24-16)
flexible	0.2…1.5 mm² (AWG 24-16)
with ferrule	0.25…0.75 mm² (AWG 24-19)

Terminal block 2, 3

Manufacturer	Phoenix Contact
Type	FKCVW 2.5/ 3-ST-5.08
The connection conditions of the manufacturer apply.	
Connection capacity	
rigid	0.2…2.5 mm² (AWG 24-13)
flexible	0.2…2.5 mm² (AWG 24-13)
with ferrule	0.25…2.5 mm² (AWG 24-13)

Mounting CTBC…

Screw type	
CTBC20…60(P)	DIN EN ISO 7045 - M5
CTCB120…210(P)	DIN EN ISO 7045 - M6
Washer type	
CTBC20…60(P)	DIN EN ISO 7089/7090 - 5
CTCB120…210(P)	DIN EN ISO 7089/7090 - 6
Tightening torque	
CTBC20…35 (P)	0.6 Nm
CTCB60…210(P)	1 Nm

Other

Operating mode	continuous operation
Mounting	any position
Degree of protection, internal components (DIN EN 60529)	IP40
Degree of protection, terminals (DIN EN 60529)	IP20
Flammability class	UL94 V-0
Software	D0610
Documentation number	D00372
Weight	
RCMB301	≤ 100 g
CTBC20	≤ 160 g
CTBC20P	≤ 220 g
CTBC35	≤ 240 g
CTBC35P	≤ 320 g
CTBC60	≤ 460 g
CTBC60P	≤ 620 g
CTBC120	≤ 1390 g
CTBC120P	≤ 1750 g
CTBC210	≤ 4220 g
CTBC210P	≤ 4870 g

( )* Factory setting

The use of the power supply units listed at "Accessories" is recommended.
The use of a surge protection device is mandatory for these power supply units.

Dimension diagram

A

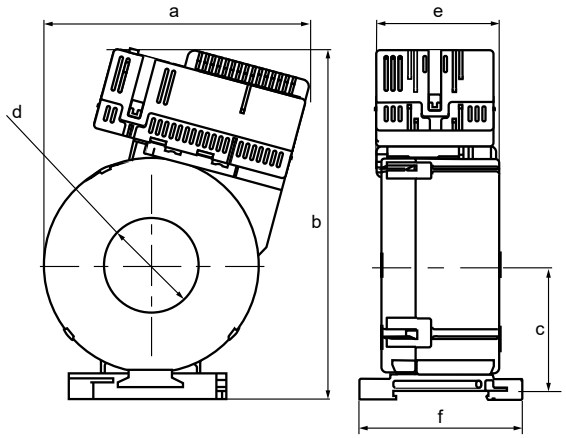

B

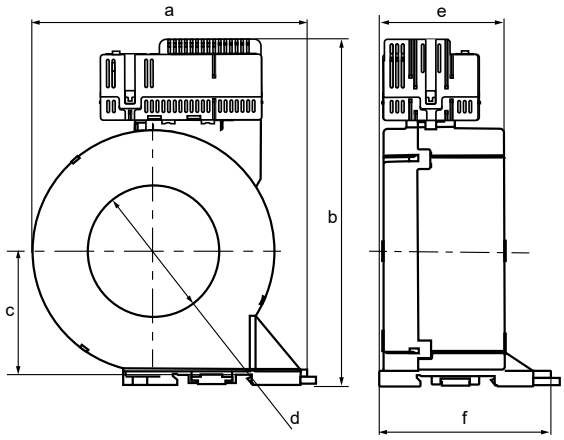

C

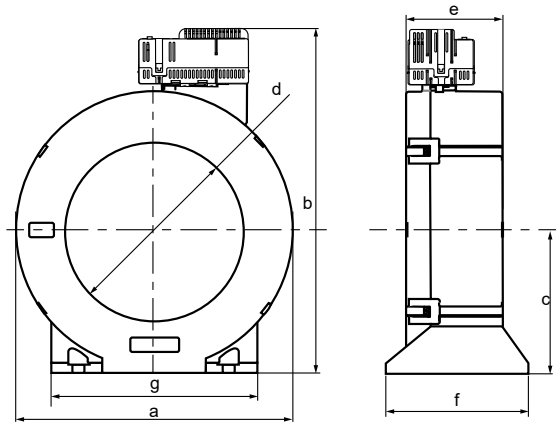

D

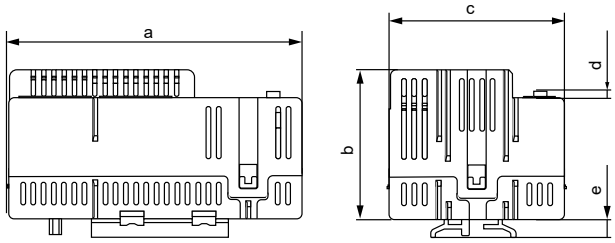

Dimensions (mm)								
	Type	**a**	**b**	**c**	**d**	**e**	**f**	**g**
A	RCMB301-CTBC20(P)	81	112	37	ø 20	46	60	–
	RCMB301-CTBC35(P)	97	130	47	ø 35	46	61	–
B	RCMB301-CTBC60(P)	126	158	57	ø 60	56	78	–
C	RCMB301-CTBC120(P)	188	232	96	ø 120	65	96	139
	RCMB301-CTBC210(P)	302	346	153	ø 210	67	113	277
D	RCMB301	74	37	44	2	4.6	–	–

Tolerance: ±0.5 mm

System states: LED and output relays

The LED indicates the system state by means of colours and lighting/flashing. The N/O contacts of relay outputs K1 and K2 have defined switching positions for each system state.

System state	LED		Notes	Changeover contact	
	green (ON)	red (alarm)		K1	K2
Device switched off	off	off	Device is de-energised, no monitoring, no monitoring function	de-energised	de-energised
Normal operating state	lights	off	The device is supplied with the specified voltage and monitors the primary circuit. No residual current flows which would lead to tripping.	energised	energised
Prewarning	lights	Flashes briefly	The device is supplied with the specified voltage and monitors the primary circuit. A fault current flows which exceeds the set limit of the prewarning.	de-energised	energised
Alarm state	off	lights	The device is supplied with the specified voltage and monitors the primary circuit. A fault current flows which exceeds the set limit of the alarm.	de-energised	de-energised

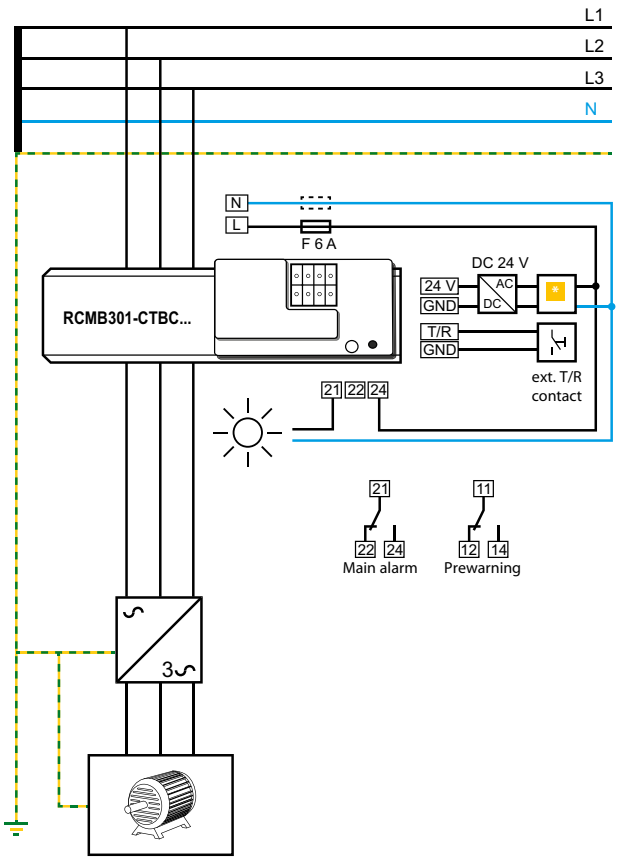

* – The use of a type 2 surge protection device (SPD) is mandatory due to possible impulse voltages and in order to comply with normative requirements.

– The surge protection device must be connected upstream of the power supply unit on the supply side.

– Features of the surge protection device:
Nominal discharge current I_n (8/20 µs): 20 kA
Response time: 25 ns
two-stage: 1 varistor + 1 spark gab
Alternatively, the power supply unit must be connected to a CAT II supply without a surge protection device.

LINETRAXX® RCMB330

AC/DC sensitive residual current monitoring module
with integrated split-core measuring current transformer

Typical applications

- Measuring AC and DC fault currents in earthed systems (TN and TT systems)

Approvals

Device features

- Continuous residual current monitoring in compliance with DGUV Vorschrift 3 (German Accident Prevention Regulation 3)
- Easy DIN rail or screw mounting
- RS-485 interface with Modbus RTU (reading out measured values/setting parameters)
- Frequency range DC…100 kHz
- Multicolour LED for operation and status messages
- Digitally adjustable filters for AC/DC sensitive measured value acquisition (lowpass filters, type B acc. to IEC 60755, type B+ acc. to VDE 0664-400)
- Separate evaluation of the AC and DC components as well as the RMS value of the residual current possible
- Installation without mechanical separation of the primary conductors
- Extension or modification of functionalities through software updates via Modbus
- Insensitive to load currents due to magnetic screen
- Supply voltage DC 24 V

Normen

The RCMB330 residual current monitoring modules comply with the device standard:

- IEC 62020-1

Further information

For further information refer to our product range on www.bender.de.

Ordering information

Type	Supply voltage U_s	Variant	Art. No.
RCMB330	DC 24 V (19,2…28,8 V)	Modbus RTU	B74043160

Accessories

Description	Art. No.
RS-485/USB interface converter	B95012045

Suitable system components

The use of the listed power supply units is recommended.
The use of a surge protection device is mandatory for these power supply units.

Description	max. connected current transformers	Type	Art. No.	Page
Voltage supply	4	STEP-PS/1 AC/24 DC/0.5	B94053110	**381**
	14	STEP-PS/1 AC/24 DC/1.75	B94053111	**381**
	34	STEP-PS/1 AC/24 DC/4.2	B94053112	**381**

Insulation coordination acc. to IEC 60664-1/IEC 60664-3

Definitions	
Measuring circuit (IC1)	Primary conductors routed through the current transformer
Secondary (IC2)	terminal block (24 V, GND, A, B, X1, X2)
Rated voltage	300 V
Overvoltage category	III
Operating altitude	≤ 2000 m AMSL
Rated impulse voltage	
IC1/IC2	4 kV
Rated insulation voltage	
IC1/IC2	300 V
Pollution degree	2
Basic insulation between	
IC1/IC2	300 V

Supply voltage

Supply voltage U_s	DC 24 V
Operating range of U_s	±5 %
Ripple U_s	≤ 2 %
Power consumption	≤ 0.5 W typ. (2.5 W max.)
Inrush current	10 A for 25 µs

Measuring circuit

Measuring current transformer, internal diameter	25 mm
Characteristics according to IEC 62020-1	AC/DC sensitive, type B
Measuring range	10…500 mA
Residual operating current $I_{\Delta n}$	30…500 mA (freely configurable), (30 mA)*
Prewarning	50…100 % $I_{\Delta n}$ (freely configurable), (60 %)*
Rated current I_n	100 A
Operating uncertainty	
DC…50 kHz	±17.5 %
50…100 kHz	0…+55 %
Relative uncertainty	
DC…50 kHz	0…–35 %
50…100 kHz	–15…+35 %

Time response

Response delay t_{on} (prewarning)	50 ms…60 min (1 s)*
Response delay t_{on} (main alarm)	50 ms…60 min (50 ms)*
Start-up delay t_{an}	0 s…60 min (freely configurable), (0 s)*
Delay on release t_{off}	0 s…60 min (freely configurable), (1 s)*
Operating time t_{ae}	
at 1 x $I_{\Delta n}$	≤ 500 ms
at 2 x $I_{\Delta n}$	≤ 230 ms
at 5 x $I_{\Delta n}$	≤ 100 ms
Response time	$t_{an} = t_{ae} + t_{on}$
Recovery time t_b	≤ 1 s

Dimension diagram (dimensions in mm, tolerance ±0.5 mm)

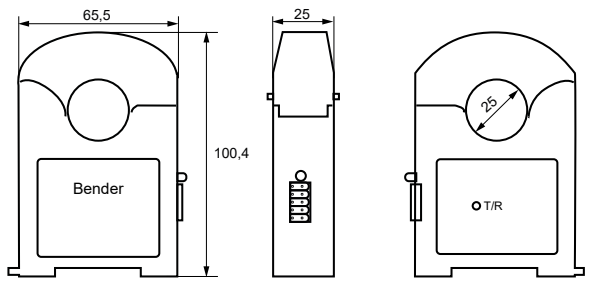

Displays

Multicolour LED	Refer to chapter "LED" in the manual.

Interface

Interface/protocol	RS-485/Modbus RTU
Baud rate	1.2…57.6 kbit/s
Cable length	0…1200 m

Environment/EMC

EMC	IEC 62020-1
Operating temperature	-25…70 °C

Classification of climatic conditions acc. to IEC 60721 (related to temperature and relative humidity)**:**

Stationary use (IEC 60721-3-3)	3K22
Transport (IEC 60721-3-2)	2K11
Long-term storage (IEC 60721-3-1)	1K22

Classification of mechanical conditions acc. to IEC 60721

Stationary use (IEC 60721-3-3)	3M11
Transport (IEC 60721-3-2)	2M4
Long-term storage (IEC 60721-3-1)	1M12

Connection

Required terminals are included in the scope of delivery

Terminal block

Manufacturer	Phoenix Contact
Type	PCB plug-in connector - DFMC 0.5/ 8-ST-2.54
The connection conditions of the manufacturer apply.	
Connection properties	
rigid	0.14…0.5 mm² (AWG 26-20)
flexible	0.14…0.5 mm² (AWG 26-20)
with ferrules	0.25…0.34 mm² (AWG 24-22)

Other

Operating mode	continuous operation
Mounting	any position
Degree of protection, internal components (DIN EN 60529)	IP40
Degree of protection, terminals (DIN EN 60529)	IP20
Flammability class	UL94 V-0
Software	D0609
Documentation number	D00389
Weight	≤ 170 g

( )* factory setting

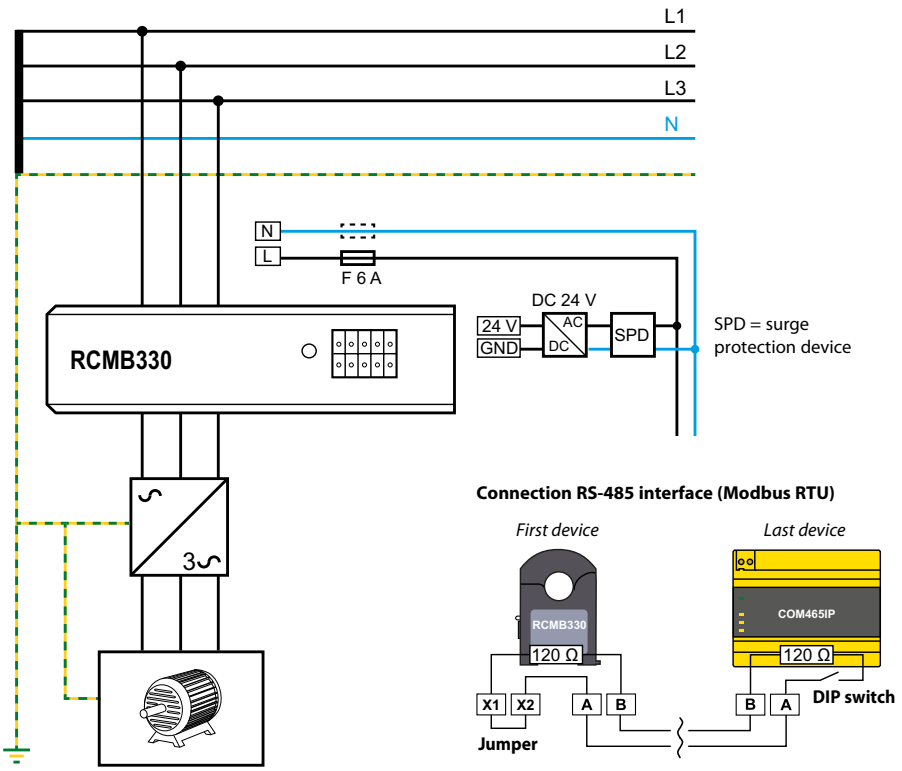

RCMB330
By using the jumper, the internal 120 Ω terminating resistor can be connected.

COM465IP
By means of the **DIP switch**, the internal 120 Ω terminating resistor can be connected.

*The **connections** for the power supply (X1, X2) and the RS-485 interface (A, B) are **doubled**, so that the wiring can be carried out directly on the device according to the **daisy-chain** principle required for **Modbus**.*

LINETRAXX® RCM410R-24/-2

Single-channel AC and pulsed DC sensitive residual current monitor for AC systems
(Earth leakage relay/monitor (ELR/ELM) / Ground fault relay)

Typical applications

- Fault or residual current monitoring in earthed systems (TN/TT)

Approvals

Device features

- AC and pulsed DC sensitive residual current monitor type A according to DIN EN IEC 62020-1
- r.m.s. value measurement
- Up to 247 monitors in the system
- Residual operating current $I_{\Delta n}$ adjustable: 10 mA…30 A (42…70 Hz)
- Supply voltage DC 24 V (-24) or AC/DC 100…240 V (-2)
- LED strip measured value display
- Adjustable response delay
- One alarm relay (changeover contact)
- N/C or N/O operation and fault memory behaviour selectable
- RS-485 with Modbus RTU
- Continuous measuring current transformer connection monitoring
- NFC interface for configuration of the unit in energised and de-energised state

Bender Connect App

Download on the App Store

GET IT ON Google Play

Licences

Software information:
https://www.bender.de/fileadmin/content/Products/t/0/Software-information.pdf

Standards

Devices of the RCM410R series have been developed according to the following standards:

- IEC 62020-1

Further information

For further information refer to our product range on www.bender.de.

Ordering information

Type	Supply voltage U_s	Art. No.
RCM410R-24	DC 24 V	B74602000
RCM410R-2	AC/DC 100…240 V / DC 24 V	B74603000

Insulation coordination acc. to IEC 60664-1/IEC 60664-3

RCM410R-24:

Definitions:	
Measuring & control circuit (IC1)	S1, S2, +, –, A, B
Output circuit (IC2)	11, 14, 12
Rated voltage	250 V
Overvoltage category	III
Operating altitude	≤ 2000 m AMSL
Rated impulse voltage:	
IC1/IC2	4 kV
Rated insulation voltage:	
IC1/IC2	250 V
Pollution degree	2
Protective separation (reinforced insulation) between:	
IC1/IC2	Overvoltage category III, 300 V
Voltage test (routine test) acc. to IEC 61010-1:	
IC1/IC2	AC 2.2 kV

RCM410R-2:

Definitions:	
Supply circuit (IC1)	A1, A2
Output circuit (IC2)	11, 14, 12
Measuring & control circuit (IC3)	S1, S2, +, –, A, B
Rated voltage	250 V
Overvoltage category	III
Operating altitude	≤ 2000 m AMSL
Rated impulse voltage:	
IC1/(IC2-3)	4 kV
IC2/IC3	4 kV
Rated insulation voltage:	
IC1/(IC2-3)	250 V
IC2/IC3	250 V
Pollution degree	2
Protective separation (reinforced insulation) between:	
IC1/(IC2-3)	Overvoltage category III, 300 V
IC2/IC3	Overvoltage category III, 300 V
Voltage test (routine test) acc. to IEC 61010-1:	
IC1/(IC2-3)	AC 2.2 kV
IC2/IC3	AC 2.2 kV

Supply voltage

RCM410R-24:

Supply voltage U_s	DC 24 V
Tolerance of U_s	-30…+25 %
Power consumption	≤ 2 W
Inrush current (< 5 ms)	< 10 A

RCM410R-2:

Supply voltage U_s	AC/DC 100…240 V (47…63 Hz)
Tolerance of U_s	±15 %
Power consumption	≤ 2 W / ≤ 3.5 VA
Inrush current (< 2 ms)	< 1.8 A

Measuring circuit

External measuring current transformer (type A)	CTAC…, W…, WR…, WS… series
Measuring current transformer monitoring[1]	on*/off
Load	33 Ω
Rated voltage Un	see datasheet measuring current transformer
Operating characteristics	type A
Frequency range	42…70 Hz
Measuring range (Peak)	2 mA…70 A
Measuring range (RMS)	2 mA…50 A
Rated residual operating current	30 A
Residual operating current $I_{\Delta n}$ (AL2)	10 mA…30 A (10 mA)*
Prewarning (AL1)[1]	50…100 % x $I_{\Delta n}$ (50 %)*
Operating uncertainty	±10 % (at 0.5…5 x $I_{\Delta n}$)
Relative uncertainty	0…-20 %
Hysteresis [1]	10…25 % (15 %)*

Time response

Start-up delay t [1]	0…999 s (0 s)*
Response delay t_{on}	0…10 s (0 s)*
Delay on release t_{off} [1]	0…999 s (0 s)*
Operating time	
t_{ae} at $I_{\Delta n}$ = 1 x $I_{\Delta n}$	≤ 250 ms
t_{ae} at $I_{\Delta n}$ = 5 x $I_{\Delta n}$	≤ 100 ms
Recovery time t_b [4]	≤ 3 s
Response time for measuring current transformer monitoring	≤ 10 s

Displays, memory

Display	status LED incl. LED bar graph
Display range measured value	0…100 %
Fault memory alarm messages	on/off (off)*

Cable lengths for measuring current transformers

Single wire ≥ 0.75 mm²	0…1 m
Single wire, twisted ≥ 0.75 mm²	0…10 m
Shielded cable ≥ 0.75 mm²	0…40 m

RS-485 interface

Protocol	Modbus RTU
Baud rate	max 115.2 kbits/s (19.2 kbits/s)*
Parity	even, no, odd (even)*
Stop bits	1/2/auto (auto)*
Cable length (at 9.6 kbits/s)	≤ 1200 m
Cable: twisted pair	min. J-Y(St)Y 2 x 0.6 mm²
Required terminating resistor	120 Ω (0.25 W)
Device address [3]	1…247 (100+SN)*

Switching elements

Switching elements	1 changeover contact
Operating principle	N/C or N/O operation (N/C operation)*
Electrical endurance, number of cycles	10000

Contact data acc. to IEC 60947-5-1:

Utilisation category	AC-13	AC-14	DC-12	DC-12	DC-12
Rated operational voltage	230 V	230 V	24 V	110 V	220 V
Rated operational current	5 A	3 A	1 A	0.2 A	0.1 A
Minimum contact rating [2]	1 mA at AC/DC ≥ 10 V				

Environment/EMC

EMC	IEC 62020-1

Ambient temperatures

Operation	-25…+55 °C
Transport	-40…+85 °C
Storage	-40…+70 °C

Classification of climatic conditions acc. to IEC 60721
(except condensation and formation of ice)

Stationary use (IEC 60721-3-3)	3K23
Transport (IEC 60721-3-2)	2K11
Long-term storage (IEC 60721-3-1)	1K22

Classification of mechanical conditions acc. to IEC 60721

Stationary use (IEC 60721-3-3)	3M11
Transport (IEC 60721-3-2)	2M4
Long-term storage (IEC 60721-3-1)	1M12

Connection

Connection type	push-in
Nominal current	≤ 10 A
Connection properties	
rigid	0.2…1.5 mm² (AWG 24-16)
flexible	0.2…1.5 mm² (AWG 24-16)
with ferrule without plastic sleeve	0.2…1.5 mm² (AWG24-16)[5]
with ferrule with plastic sleeve	0,2…0,75 mm²
Stripping length	8 mm

Other

Operating mode	continuous operation
Mounting	vertical
Degree of protection, internal components (DIN EN 60529)	IP30
Degree of protection, terminals (DIN EN 60529)	IP20
Enclosure material	polycarbonate
DIN rail mounting acc. to	IEC 60715
Flammability class	UL94 V-0
Documentation number	D00403
Weight	≤ 100 g

* Factory setting
1) Can only be configured via RS-485
2) Refers to relays that have not been operated with high contact currents
3) Factory setting: 100 + last two digits of serial number
4) See chapter 2.2.5.1 in the manual
5) > 0,75 mm² use crimping pliers similar to CRIMPFOX 6 / Weidmüller PZ6/PZ6/5 only.

Dimension diagram (dimensions in mm)

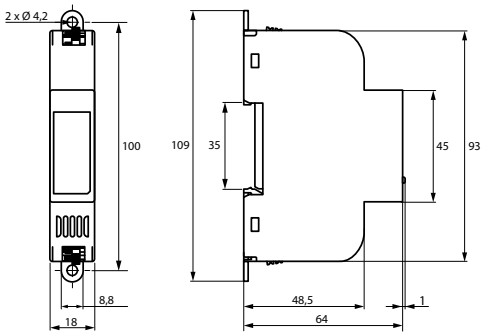

Wiring diagram

RCM410R-24

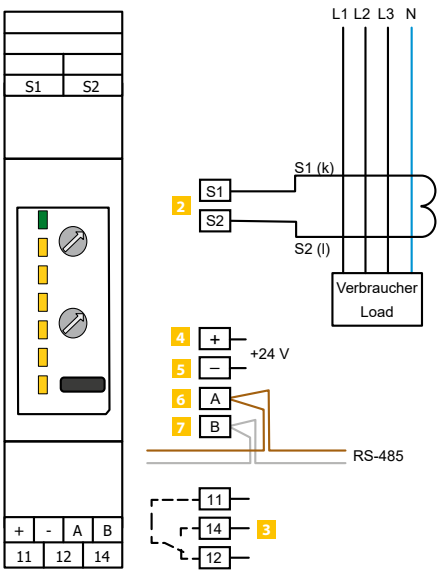

RCM410R-2

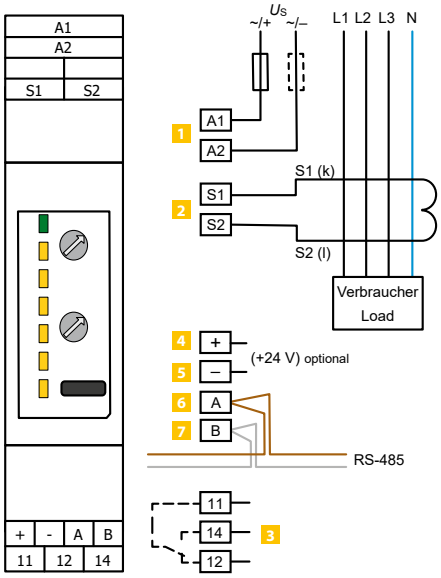

1	**A1, A2**	Supply voltage U_S	5	**–**	Ground
2	**S1, S2**	Measuring current transformer	6	**A**	RS-485 A
3	**11, 14, 12**	Alarm relay K1	7	**B**	RS-485 B
4	**+**	+24 V			

RCMB131-01

AC/DC sensitive residual current monitoring module
for measuring AC and DC currents up to ±100 mA

Typical applications

- Designed for installation in PDUs and outlet boxes
- Communication with a master via an RS-485 interface via Modbus RTU

Approvals

Device features

- AC/DC sensitive leakage and fault current monitoring for preventive maintenance
- Suitable for PCB mounting
- High resolution for implementing equipment leakage current monitoring
- Measured value and alarm transmission via Modbus RTU (RS-485)
- Frequency range DC…2 kHz
- Compact design for monitoring nominal loads up to I_n = 32 A
- Low load current sensitivity due to fully shielded measuring current transformer
- Continuous monitoring of the connection to the measuring current transformer
- Integrated test function
- Supply voltage DC 12…24 V

Further information

For further information refer to our product range on www.bender.de.

Ordering information

Type	Output range	Supply voltage U_s	Art. No.
RCMB131-01	0…100 mA (r.m.s.)	DC 12…24 V	B94042131

Technical data

Insulation coordination according to IEC 60664-1

Primary circuit	monitored primary conductors
Secondary circuit	Connections Vcc, GND, A, B, S1, S2
All following specifications apply to the insulation between the primary and secondary circuit	
Rated voltage	300 V
Overvoltage category	III
Rated impulse voltage	4 kV
Operating altitude	up to 3000 m AMSL
Rated insulation voltage	320 V
Pollution degree	2
Safe separation (reinforced insulation)	between primary and secondary circuit
Voltage test acc. to IEC 61010-1	AC 2.2 kV

Voltage supply

Supply voltage U_s	DC 12…24 V
Operating range of the supply voltage	±20 %
Ripple	100 mV
Power consumption	< 0.75 W

Measuring circuit

Internal diameter primary conductor opening	15 mm
Measured value evaluation	DC, r.m.s.
Measuring range	AC/DC ±300 mA
Characteristics according to IEC 60755	AC/DC sensitive, type B
$I_{\Delta n1}$	
Response value	DC 3.5…100 mA (* 6 mA)
Response tolerance	0.7…1.0 x $I_{\Delta n1}$
$I_{\Delta n2}$	
Response value	r.m.s. 3.5…100 mA (* 30 mA)
Response tolerance	
DC…1 kHz	0.7…1.0 x $I_{\Delta n2}$
1…2 kHz	1.0…2.0 x $I_{\Delta n2}$
Output range	0…100 mA (r.m.s.)
Resolution	< 0.2 mA
Frequency range	DC…2 kHz
Measuring time	180 ms

Operating uncertainty

DC…500 Hz	±(5 % +0.5 mA)
501…1000 Hz	±(15 % +0.5 mA)
1…2 kHz	-(50 % ±0.5 mA)

Time response

Response time tae (relay switching time of 10 ms considered)	
for 1 x $I_{\Delta n}$	≤ 290 ms
for 2 x $I_{\Delta n}$	≤ 140 ms
for 5 x $I_{\Delta n}$	≤ 30 ms
Recovery time t_b	≤ 2s

Disturbances

Load current I_n	32 A

Response value assignment

$I_{\Delta n1}$ (DC)	S1
$I_{\Delta n2}$ (r.m.s.)	S2

Outputs

Interface	RS-485
Protocol	Modbus RTU
Switching outputs	Open Collector, not short-circuit-proof
Switching capacity	40 V / 50 mA
Output voltage LOW level	0…0.6 V
Output voltage HIGH level	3.1…3.6 V
Hysteresis	≤ 30 %

Environment/EMC

EMC	DIN EN 62020:2003 (VDE 0663), where applicable
Ambient temperature (incl. primary conductors routed through module)	-25…+70 °C
Classification of climatic conditions acc. to IEC 60721 (related to temperature and relative humidity)**:**	
Stationary use (IEC 60721-3-3)	3K22
Transport (IEC 60721-3-2)	2K11
Long-term storage (IEC 60271-3-1)	1K22
Classification of mechanical conditions acc. to IEC 60271	
Stationary use (IEC 60721-3-3)	3M11
Transport (IEC 60721-3-2)	2M4
Long-term storage (IEC 60271-3-1)	1M12

Other

Operating mode	continuous operation
Mounting	any position
Protection class	IP 30
Flammability rating	UL94 V-0
Service life at 40 °C	10 years
Software	D0604
Documentation number	D00358

* = factory settings

Dimension diagram (dimensions in mm)

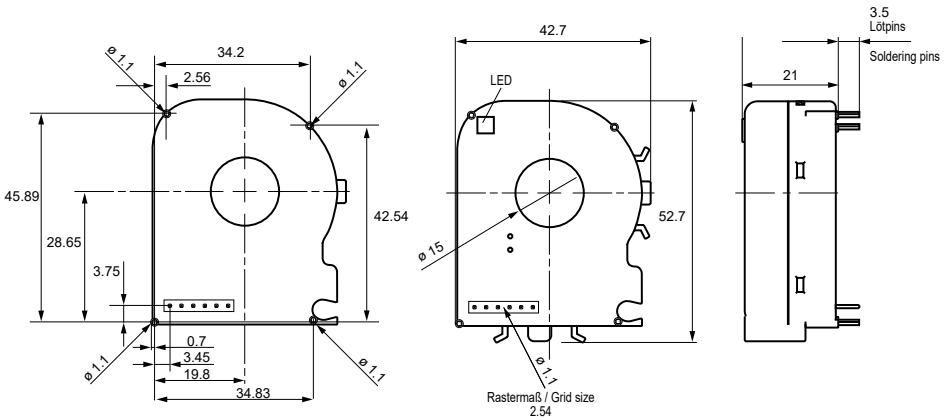

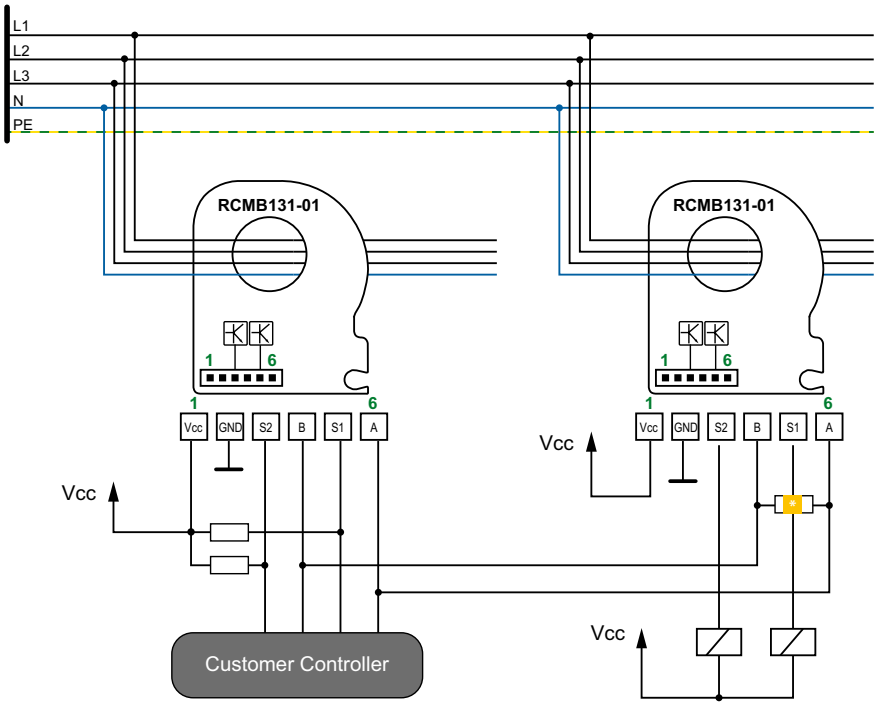

* Terminating resistor 120 Ω must only be set on the last device in the RS-485 bus chain

RCMB131-02

AC/DC sensitive residual current monitoring module
for measuring AC and DC currents up to ±100 mA

Typical applications

- Designed for installation in PDUs and outlet boxes
- Outputs the r.m.s. value of the residual current via a PWM output, which is read out and evaluated by a higher-level circuit

Approvals

Device features

- AC/DC sensitive leakage and fault current monitoring for preventive maintenance
- Suitable for PCB mounting
- High resolution for implementing equipment leakage current monitoring
- Measurement signal output via PWM output
- Frequency range DC…2 kHz
- Compact design for monitoring nominal loads up to I_n = 32 A
- Low load current sensitivity due to fully shielded measuring current transformer
- Continuous monitoring of the connection to the measuring current transformer
- Integrated test function
- Supply voltage DC 12…24 V

Further information

For further information refer to our product range on www.bender.de.

Ordering information

Type	Output range	Supply voltage U_s	Art. No.
RCMB131-02	0…100 mA (r.m.s.)	DC 12…24 V	B94042132

Technical data

Insulation coordination according to IEC 60664-1

Primary circuit	monitored primary conductors
Secondary circuit	Connections Vcc, GND, T, PWM, S1, ERR
All following specifications apply to the insulation between the primary and secondary circuit	
Rated voltage	300 V
Overvoltage category	III
Rated impulse voltage	4 kV
Operating altitude	up to 3000 m AMSL
Rated insulation voltage	320 V
Pollution degree	2
Safe separation (reinforced insulation)	between primary and secondary circuit
Voltage test acc. to IEC 61010-1	AC 2.2 kV

Voltage supply

Supply voltage U_s	DC 12…24 V
Operating range of the supply voltage	±20 %
Ripple	100 mV
Power consumption	< 0.75 W

Measuring circuit

Internal diameter primary conductor opening	15 mm
Measured value evaluation	DC, r.m.s.
Characteristics according to IEC 60755	AC/DC sensitive, type B
Response value $I_{\Delta n1}$	DC 3.5…100 mA (* 6 mA)
Response tolerance $I_{\Delta n1}$	0.7…1.0 x $I_{\Delta n1}$
Measuring range	AC/DC ±300 mA
Resolution	< 0.2 mA
Frequency range	DC…2 kHz
Measuring time	180 ms

Operating uncertainty

DC…500 Hz	±(5 % + 0.5 mA)
501…1000 Hz	±(15 % + 0.5 mA)
1001…2000 Hz	±(50 % + 0.5 mA)

Time response

Response time t_{ae} (relay switching time of 10 ms considered)	
for 1 x $I_{\Delta n}$	≤ 290 ms
for 2 x $I_{\Delta n}$	≤ 140 ms
for 5 x $I_{\Delta n}$	≤ 30 ms
Recovery time t_b	≤ 2s

Disturbances

Load current I_n	32 A

Outputs

Switching outputs S1, ERR	Open Collector, not short-circuit-proof
Switching capacity	40 V / 50 mA
Hysteresis	≤ 30 %
PWM	PWM signal, push pull
Internal resistance PWM signal	4.7 kΩ
Voltage HIGH level	3.1…3.6 V
Voltage LOW level	0…0.6 V
Frequency PWM signal	8 kHz
Specification of the PWM signal	(0…100) % = (0…100) mA
Output resistance	not short-circuit-proof

Response value assignment

$I_{\Delta n1}$ (DC)	S1
Internal error	ERR

Environment/EMC

EMC	DIN EN 62020:2003 (VDE 0663), where applicable
Ambient temperature (incl. primary conductors routed through module)	-25…+70 °C

Classification of climatic conditions acc. to IEC 60721 (related to temperature and relative humidity)**:**

Stationary use (IEC 60721-3-3)	3K22
Transport (IEC 60721-3-2)	2K11
Long-term storage (IEC 60271-3-1)	1K22

Classification of mechanical conditions acc. to IEC 60271

Stationary use (IEC 60721-3-3)	3M11
Transport (IEC 60721-3-2)	2M4
Long-term storage (IEC 60271-3-1)	1M12

Other

Operating mode	continuous operation
Mounting	any position
Protection class	IP 30
Flammability rating	UL94 V-0
Service life at 40 °C	10 years
Software	D0604
Documentation number	D00354

* = factory settings

Dimension diagram (dimensions in mm)

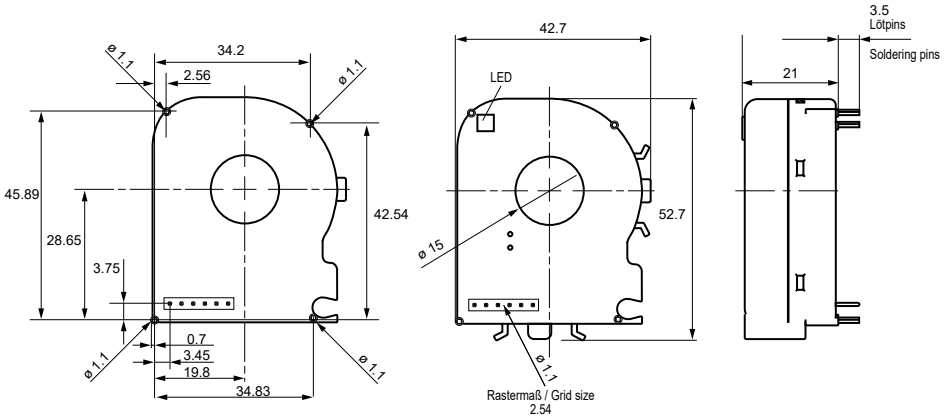

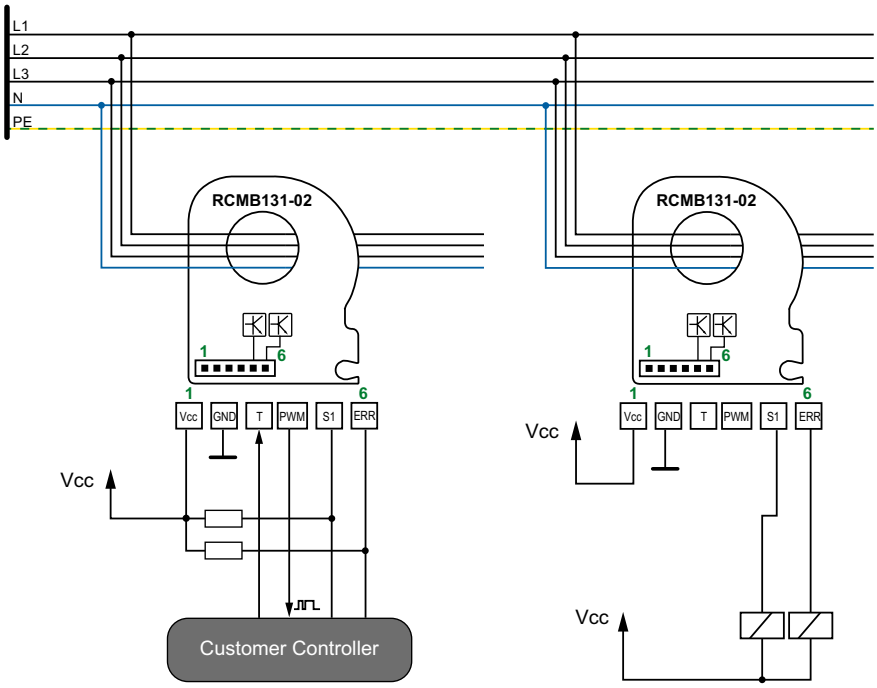
L1
L2
L3
N
PE
RCMB131-02
RCMB131-02
1
6
Vcc
GND
T
PWM
S1
ERR
Vcc
Customer Controller

RCMB132-01

AC/DC sensitive residual current monitoring module
for measuring AC and DC currents up to ±100 mA

Typical applications

- Designed for installation in PDUs and outlet boxes
- Communication with a master via an RS-485 interface via Modbus RTU
- Connection of several devices in a daisy chain. For this purpose, the RCMB132-01 provides two identical connectors for RS-485 (incl. power supply)

Approvals

Device features

- AC/DC sensitive leakage and fault current monitoring for preventive maintenance
- High resolution for implementing equipment leakage current monitoring
- Measured value and alarm transmission via Modbus RTU (RS-485)
- Frequency range DC…2 kHz
- Compact design for monitoring nominal loads up to I_n = 32 A
- Low load current sensitivity due to fully shielded measuring current transformer
- Continuous monitoring of the connection to the measuring current transformer
- Integrated test function
- Supply voltage DC 12…24 V

Further information

For further information refer to our product range on www.bender.de.

Ordering information

Type	Measuring range	Supply voltage U_s	Art. No.
RCMB132-01	AC/DC ±100 mA	DC12…24 V	B94042136
Mounting foot MCCT20			B91080111

Technical data

Insulation coordination according to IEC 60664-1

Primary circuit	monitored primary conductors
Secondary circuit	Connections Vcc, GND, A, B, S1, S2
All following specifications apply to the insulation between the primary and secondary circuit	
Rated voltage	300 V
Overvoltage category	III
Rated impulse voltage	4 kV
Operating altitude	up to 3000 m AMSL
Rated insulation voltage	320 V
Pollution degree	2
Safe separation (reinforced insulation)	between primary and secondary circuit
Voltage test acc. to IEC 61010-1	AC 2.2 kV

Voltage supply

Supply voltage U_s	DC 12…24 V
Operating range of the supply voltage	±20 %
Ripple	100 mV
Power consumption	< 0.75 W

Measuring circuit

Internal diameter primary conductor opening	15 mm
Measured value evaluation	DC, r.m.s.
Measuring range	AC/DC ±300 mA
Characteristics according to IEC 60755	AC/DC sensitive, type B
$I_{\Delta n1}$	
Response value	DC 3.5…100 mA (* 6 mA)
Response tolerance	0.7…1.0 x $I_{\Delta n1}$
$I_{\Delta n2}$	
Response value	r.m.s. 3.5…100 mA (* 30 mA)
Response tolerance	
DC…1 kHz	0.7…1.0 x $I_{\Delta n2}$
1…2 kHz	1.0…2.0 x $I_{\Delta n2}$
Output range	0…100 mA (r.m.s.)
Resolution	< 0.2 mA
Frequency range	DC…2 kHz
Measuring time	180 ms

Operating uncertainty

DC…500 Hz	±(5 % + 0.5 mA)
501…1000 Hz	±(15 % + 0.5 mA)
1…2 kHz	-(50 % ± 0.5 mA)

Time response

Response time t_{ae} (relay switching time of 10 ms considered)	
for 1 x $I_{\Delta n}$	≤ 290 ms
for 2 x $I_{\Delta n}$	≤ 140 ms
for 5 x $I_{\Delta n}$	≤ 30 ms
Recovery time t_b	≤ 2 s

Disturbances

Load current I_n	32 A

Response value assignment

$I_{\Delta n1}$ (DC)	S1
$I_{\Delta n2}$ (r.m.s.)	S2

Outputs

Interface	RS-485
Protocol	Modbus RTU
Switching outputs	Open Collector, not short-circuit-proof
Switching capacity	40 V / 50 mA
Output voltage LOW level	0…0.6 V
Output voltage HIGH level	3.1…3.6 V
Hysteresis	≤ 30 %

Environment/EMC

EMC	DIN EN 62020:2003 (VDE 0663), where applicable
Ambient temperature (incl. primary conductors routed through module)	-25…+70 °C
Classification of climatic conditions acc. to IEC 60721 (related to temperature and relative humidity)**:**	
Stationary use (IEC 60721-3-3)	3K22
Transport (IEC 60721-3-2)	2K11
Long-term storage (IEC 60271-3-1)	1K22
Classification of mechanical conditions acc. to IEC 60271	
Stationary use (IEC 60721-3-3)	3M11
Transport (IEC 60721-3-2)	2M4
Long-term storage (IEC 60271-3-1)	1M12

Other

Operating mode	continuous operation
Mounting	any position
Protection class	IP 30
Flammability rating	UL94 V-0
Service life at 70 °C acc. to IEC 61709	20 years
Software	D0604
Plug (included in scope of delivery)	Phoenix Contact, PTSM 0.5/4-P-2.5
Documentation number	D00356

* = factory settings

Dimension diagram (dimensions in mm)

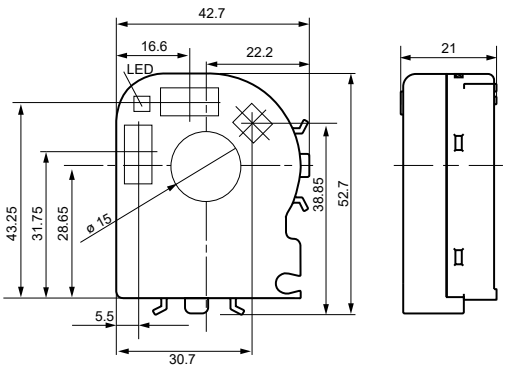

Rail mounting

with mounting foot MCCT20 (accessories, see ordering data)

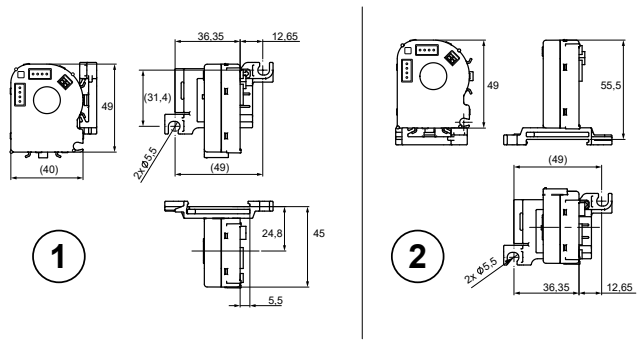

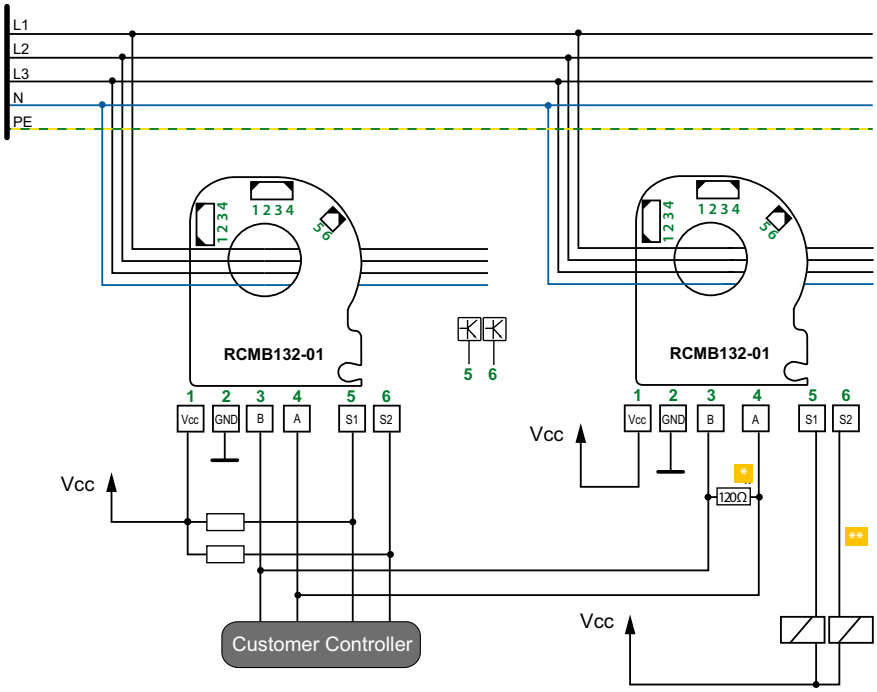

* Terminating resistor 120 Ω must only be set on the last device in the RS-485 bus chain.

** An external protective circuit is especially required for inductive loads.

RCMB104

AC/DC sensitive residual current monitoring module for electric vehicle charging systems

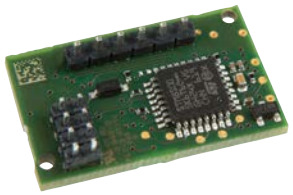

Typical applications

- AC charging systems for electric vehicles

Approvals

eccept RCMB104-1

Device features

- Four outputs (Switch1, Switch2, Error, PWM)
- Measuring range ±300 mA
- Residual current resolution < 0.2 mA
- Patented measurement technology
- Load current up to 32 A or 80 A* RMS (singlephase) or 3 x 32 A RMS (three-phase)
- Fault output (integrated self monitoring and test functions)
- High insensitivity to external interferences
- Available variants for application according to IEC 62752 and UL 2231-2
- Wide range of use even in severe environments (e.g. in the event of external fields)
- In applications according to IEC 62752, the device can replace a type B RCD when combined with a type A RCD and a suitable switching device (e.g. a power relay)

* Only in case of use according to UL2231-2

Standards

The monitoring modules compliens, depending on the variant, with the following device standards:

RCMB104-1:

IEC 62752 In-cable control and protection device for mode 2 charging of electric road vehicles (IC-CPD)

RCMB104-2:

CCID20 acc. to UL 2231-2 (Personnel Protection Systems for Electric Vehicle (EV) Supply Circuits: Particular Requirements for Protection Devices for Use in Charging Systems)

RCMB104-2

CCID5 acc. to UL 2231-2 (Personnel Protection Systems for Electric Vehicle (EV) Supply Circuits: Particular Requirements for Protection Devices for Use in Charging Systems)

Patents

EP 2 571 128 / US 9,397,494 / ZL 201210157968.6 / CN 103001175, EP 2 813 856

Further information

For further information refer to our product range on www.bender.de.

Ordering information RCMB104

Type	Description	Art. No.
RCMB104-1	0…2000 Hz IEC 6/30 mA	B94042480
RCMB104-2	0…2000 Hz UL 2231 5/20 mA	B94042481

Ordering information Measuring current transformer

Description	Diameter/ Connection cable	Type	Art. No.	Page
Measuring current transformer	17 mm/–	CTBC17	B98080070	**262**
Connection cable CTBC17	–/180 ± 30 mm	CTBC17-Kabel180MM	B98080540	**262**
	–/325 ± 25 mm	CTBC17-Kabel325MM	B98080541	**262**
	–/600 ± 30 mm	CTBC17- Kabel600MM	B98080543	**262**
	–/1470 ± 30 mm	CTBC17-Kabel1470MM	B98080542	**262**

Main circuit (current paths trough CT)

Rated operational voltage U_e	230/400 V
Rated current I_n	single-phase: 32 A (80 A) three-phase: 32 A

Insulation coordination according to IEC 60664-1/IEC 60664-3

Definitions:	
Main circuit IC1	(L1, L2, L3, N)
Control circuit IC2	(a…f, Test, Error, Switch2, Switch1, Vcc, GND, PWM)
Rated voltage	250 V
Overvoltage category (ÜK)	III
Rated impulse voltage:	
IC1/IC2	4 kV
Rated insulation voltage U_i:	
IC1/IC2	250 V
Pollution degree	2
Protective separation (reinforced insulation) between:	
IC/IC2	ÜK III, 250 V

The data are valid from the main circuit to the control circuit.

Power supply

Nominal supply voltage V_{cc}	DC 5 V
Tolerance of the supply voltage V_{cc}	±5 %
Voltage ripple V_{cc}	< 100 mV
Absolute maximum supply voltage V_{cc}	DC 5.5 V
Supply current I_{cc}	45 mA

Residual current measuring range

Rated frequency $I_{\Delta n}$	0…2000 Hz
Measuring range $I_{\Delta n}$	±300 mA
Resolution $I_{\Delta n}$	< 0.2 mA

Response values

RCMB104-1 (Switch1)

Rated residual operating current $I_{\Delta rms1}$	RMS 30 mA
Response tolerance $I_{\Delta rms1}$	
for f = DC …≤ 100 Hz	0.7…1 x $I_{\Delta rms1}$
for f = 100…≤ 400 Hz	0.8…2.5 x $I_{\Delta rms1}$
for f = 400…2000 Hz	1.5…6 x $I_{\Delta rms1}$
Restart value $I_{\Delta rms1}$	< 10 mA
Operating time t_{ae} (DC…≤ 100 Hz)	
1x $I_{\Delta n1}$	< 270 ms
2x $I_{\Delta n1}$	< 80 ms
5x $I_{\Delta n1}$	< 20 ms

RCMB104-1 (Switch2, IEC 62752)

Rated residual operating current $I_{\Delta dc2}$	DC 6 mA
Response tolerance $I_{\Delta dc2}$	> 0.5…1 x $I_{\Delta dc2}$
Rated residual operating current $I_{\Delta rms2}$	RMS 30 mA
Response tolerance $I_{\Delta rms2}$	
for f = DC …≤ 100 Hz	0.7…1 x $I_{\Delta rms2}$
for f = 100…≤ 400 Hz	0.8…2.5 x $I_{\Delta rms2}$
for f = 400…2000 Hz	1.5…6 x $I_{\Delta rms2}$
Restart value	
$I_{\Delta dc2}$	< 2.5 mA
$I_{\Delta rms2}$	< 10 mA
Operating time t_{ae}	
DC 6 mA	< 700 ms
DC 60 mA	< 240 ms
DC 300 mA	< 20 ms
Operating time t_{ae} (DC…≤ 100 Hz)	
1x $I_{\Delta rms2}$	< 270 ms
2x $I_{\Delta rms2}$	< 80 ms
5x $I_{\Delta rms2}$	< 20 ms

RCMB104-2 (Switch1, CCID20 acc. to UL 2231-2)

Ground fault threshold I_1	
60 Hz	RMS 20 mA
DC	40 mA x 1.141
Response tolerance I_1	
for f = 60 Hz	0.75…1 x I1
for f = > 60…≤ 2000 Hz	0.8…3.5 x I1
Restart value I_1	< 10 mA
Operating time t_{ae} (DC…≤ 100 Hz)	
All fault current except pure DC	< $(20/I)^{1.43}$ –10 ms
DC > 30…≤ 100.6 mA	< $(40 \times 1.414/I)^4$ –10 ms
DC > 100.6 mA	< $(20/I)^{1.43}$ –10 ms
Release time t_{off}	< 2.5 s

RCMB104-2 (Switch2, CCID5 acc. to UL 2231-2)

Ground fault threshold I_2	
60 Hz	RMS 5 mA
DC	30 mA
Response tolerance I_2	
for f = ≥ 60…≤ 500 Hz	0.94…1.1 x I_2
for f = > 500…≤ 2000 Hz	0.8…2 x I_2
Restart value I_2	< 2 mA
Operating time t_{ae} (DC…≤ 100 Hz)	
All fault current except pure DC	< $(20/I)^{1.43}$ –10 ms
DC > 30…≤ 100.6 mA	< $(40 \times 1.414/I)^4$ –10 ms
DC > 100.6 mA	< $(20/I)^{1.43}$ –10 ms
Release time t_{off}	< 2.5 s

Outputs Switch1, Switch2, Error

Type	Open Collector (NPN)
Switching capacity	DC 40 V/20 mA*
Signalling times in the event of module and hardware errors	
Error	≤ 1.5 s
Switch1	≤ 2.5 s
Switch2	≤ 2.5 s

PMW output

Type	PushPull
HIGH level	3.1…3.5 V*
LOW level	0…0.5 V*
PWM frequency	8000 Hz
Scaling	
RCMB104-1	0…100 % = DC 0…30 mA
RCMB104-2	0…100 % = RMS 0…50 mA
Maximum current-carrying ability	10 mA

* The overvoltage protection must be ensured by the customer.

Control input (TEST)

Type	LOW: activated state HIGH: deactivated state
Switching thresholds	HIGH: 3.1… 5.5 V LOW: 0… 0.6 V

EMV (IEC 62752, UL 2231-2)

ESD **restrictions**: The device must be mounted in an enclosure that complies with the mentioned standards.

Restrictions line-conducted interferences:

Maximum connection length:	100 mm
ESD immunity acc. to Human Body Model JESD22-A114	±2 kV (air) ±2 kV (contact)
Operating temperature	–30…80 °C
Storage temperature	–40…85 °C

Climatic class

Stationary use (IEC 60721-3-3)	3K24 (except condensation, water and formation of ice)
Transport (IEC 60721-3-2)	2K11
Long-term storage (IEC 60721-3-1)	1K21

Classification of mechanical conditions

Stationary use (IEC 60721-3-3)	3M11
Transport (IEC 60721-3-2)	2M4
Long-term storage (IEC 60721-3-1)	1M12
Range of use	< 4000 m

Degree of protection

RCMB104	IP00
Measuring current transformer (without connector plug)	IP55

Connections

Measuring current transformer

Connection type	PCB plug-in connector 0.65 x 0.65 mm
Modular dimensions	single row 6 x 2.54 mm
Contact surface	tinned
Pin length	2.5 mm

Inputs/outputs

Connection type	PCB plug-in connector 0.5 x 0.5 mm
Arrangement of connections	double row 2 x 4 pins
Modular dimensions	2.00 mm
Contact surface	tinned
Pin length	2.5 mm
Soldering process for PCB	recommended: selective soldering

Connection measuring current transformer CTBC17

Maximum distance to connector	100 mm
Connection type	PCB plug-in connector
Number of poles	6 (2x3 poles)
Modular dimensions	3.0 mm
Number of mating cycles	30
Manufacturer type designation	Molex MicroFit 3.0 Header
Article number	43045-0607

The connector is not included in the scope of delivery.
For further information, refer to the original data sheet created by Molex.

Dimension diagram (dimensions in mm)

Side view;
Recommended drilling diameter: Ø 1,1mm

Front view

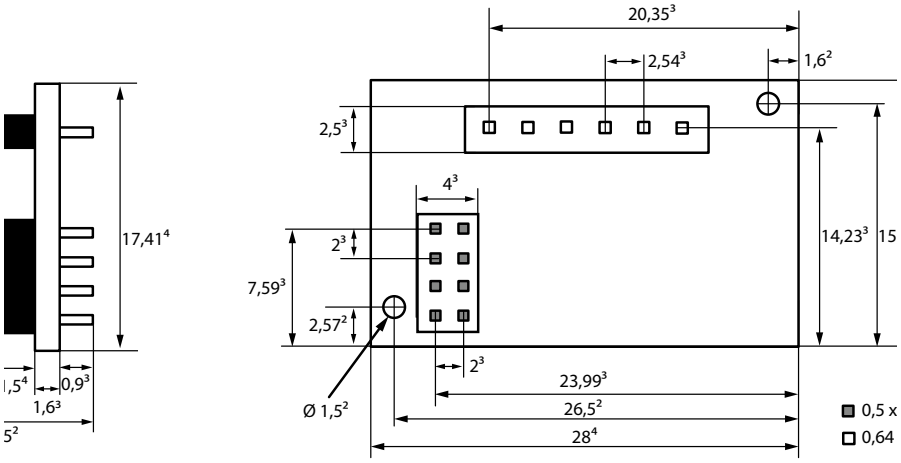

Tolerances dimensions	
x¹	± 0,05
x²	± 0,1
x³	± 0,2
x4	± 0,3

Wiring diagram

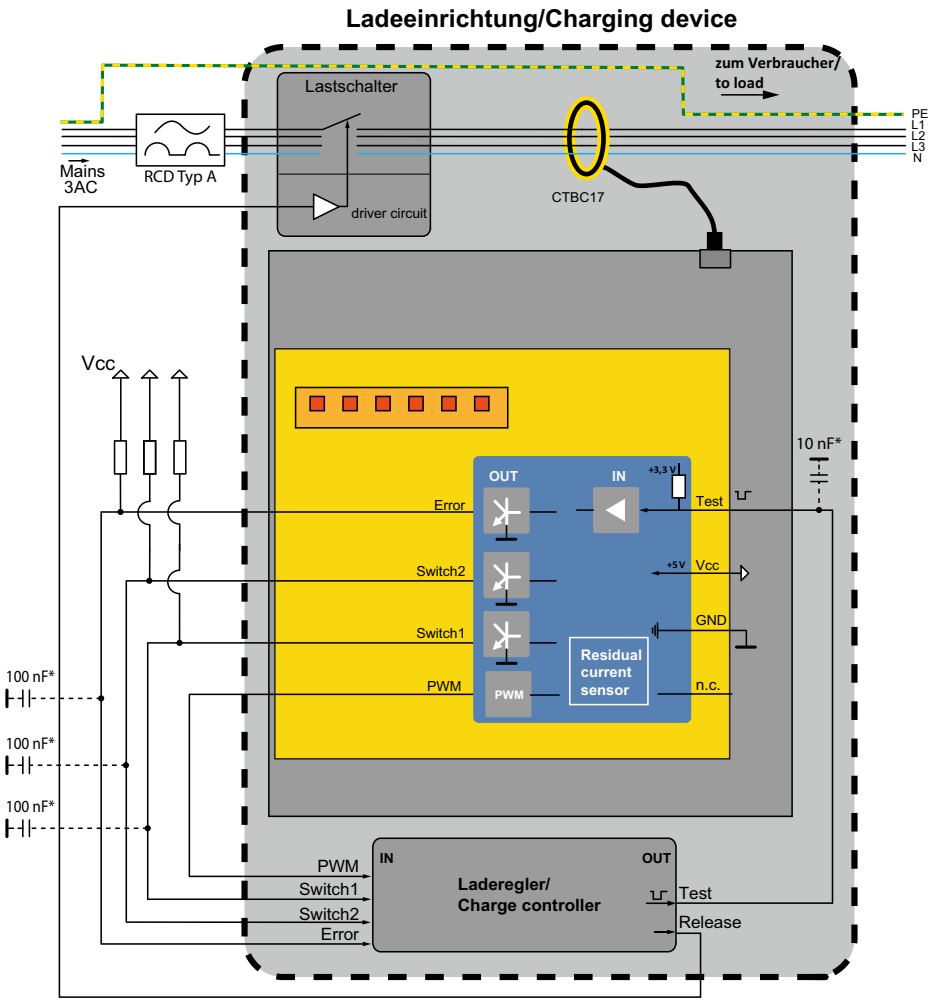

* Optional capacities for EMC optimisation

RDC104-4

DC sensitive residual current monitoring module for electric vehicle charging systems

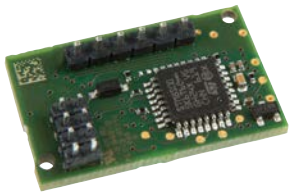

Typical applications

- DC fault current monitoring of AC charging systems for electric vehicles

Approvals

Device features

- Four outputs (Switch1, Switch2, Error, PWM)
- Measuring range ±300 mA
- Residual current resolution < 0.2 mA
- Patented measurement technology
- Rated current up to 32 A (singlephase) or 3 x 32 A RMS (three-phase)
- Fault output (integrated self monitoring and test functions)
- High insensitivity to external interferences
- Available variants for application according to IEC 62955
- Wide range of use even in severe environments (e.g. in the event of external fields)
- In applications according to IEC 62955, the device can replace a type B RCD when combined with a type A RCD and a suitable switching device (e.g. a power relay)

Standards

The monitoring modules compliens, depending on the variant, with the following device standards:

RDC104- 4:

IEC 62955 Residual direct current detecting device (RDC-DD) to be used for mode 3 charging of electric vehicles)

Patents

EP 2 571 128 / US 9,397,494 / ZL 201210157968.6 / CN 103001175, EP 2 813 856.

Further information

For further information refer to our product range on www.bender.de.

Ordering information RDC104-4

Type	Description	Art. No.
RDC104-4	RDC-M module acc. to IEC 62955	B94042483

Ordering information Measuring current transformer

Description	Diameter/ Connection cable	Type	Art. No.	Page
Measuring current transformer	17 mm/–	CTBC17	B98080070	**262**
Connection cable CTBC17	–/180 ± 30 mm	CTBC17-Kabel180MM	B98080540	**262**
	–/325 ± 25 mm	CTBC17-Kabel325MM	B98080541	**262**
	–/600 ± 30 mm	CTBC17- Kabel600MM	B98080543	**262**
	–/1470 ± 30 mm	CTBC17-Kabel1470MM	B98080542	**262**

Main circuit (current paths trough CT)

Rated operational voltage U_e	230/400 V
Rated current I_n	single-phase: 32 A (80 A) three-phase: 32 A

Insulation coordination according to IEC 60664-1/IEC 60664-3

Definitions:	
Main circuit IC1	(L1, L2, L3, N)
Control circuit IC2	(a…f, Test, Error, Switch2, Switch1, Vcc, GND, PWM)
Rated voltage	250 V
Overvoltage category (ÜK)	III
Rated impulse voltage:	
IC1/IC2	4 kV
Rated insulation voltage U_i:	
IC1/IC2	250 V
Pollution degree	2
Protective separation (reinforced insulation) between:	
IC/IC2	ÜK III, 250 V

The data are valid from the main circuit to the control circuit.

Power supply

Nominal supply voltage V_{cc}	DC 5 V
Tolerance of the supply voltage V_{cc}	±5 %
Voltage ripple V_{cc}	< 100 mV
Absolute maximum supply voltage V_{cc}	DC 5.5 V
Supply current I_{cc}	45 mA

Residual current measuring range

Rated frequency $I_{\Delta n}$	0…2000 Hz
Measuring range $I_{\Delta n}$	100 mA
Resolution $I_{\Delta n}$	< 0.2 mA

Response values

RDC104-4 (Switch1)

Rated residual operating current I_{dc1}	DC 6 mA
Response tolerance $I_{\Delta dc1}$	0.5…1 x $I_{\Delta dc1}$
Restart value $I_{\Delta dc1}$	< 2.5 mA
Operating time t_{ae}	
DC 6 mA	< 480 ms
DC 12 mA	< 240 ms
DC 30 mA	< 120 ms
DC 60 mA	< 70 ms
DC 200 mA	< 30 ms
DC 300 mA	< 30 ms

RDC104-4 (Switch2, IEC 62955)

Rated residual operating current $I_{\Delta dc2}$	DC 6 mA
Response tolerance $I_{\Delta dc2}$	> 0.5…1 x $I_{\Delta dc2}$
Restart value $I_{\Delta dc2}$	< 2.5 mA
Operating time t_{ae}	
DC 6 mA	< 480 ms
DC 12 mA	< 240 ms
DC 30 mA	< 120 ms
DC 60 mA	< 70 ms
DC 200 mA	< 30 ms
DC 300 mA	< 30 ms

Outputs Switch1, Switch2, Error

Type	Open Collector (NPN)
Switching capacity	DC 40 V/20 mA*
Signalling times in the event of module and hardware errors	
Error	≤ 1.5 s
Switch1	≤ 1.5 s
Switch2	≤ 1.5 s

PMW output

Type	PushPull
HIGH level	3.1…3.5 V*
LOW level	0…0.5 V*
PWM frequency	8000 Hz
Scaling	
RDC104-4	0…100 % = DC 0…30 mA
Maximum current-carrying ability	10 mA

* The overvoltage protection must be ensured by the customer.

Control input (TEST)

Type	LOW: activated state HIGH: deactivated state
Switching thresholds	HIGH: 3.1… 5.5 V LOW: 0… 0.6 V

EMV (IEC 62955)

ESD **restrictions**: The device must be mounted in an enclosure that complies with the mentioned standards.

Restrictions line-conducted interferences:

Maximum connection length:	100 mm
ESD immunity acc. to Human Body Model JESD22-A114	±2 kV (air) ±2 kV (contact)
Operating temperature	–30…80 °C
Storage temperature	–40…85 °C

Climatic class

Stationary use (IEC 60721-3-3)	3K24 (except condensation, water and formation of ice)
Transport (IEC 60721-3-2)	2K11
Long-term storage (IEC 60721-3-1)	1K21

Classification of mechanical conditions

Stationary use (IEC 60721-3-3)	3M11
Transport (IEC 60721-3-2)	2M4
Long-term storage (IEC 60721-3-1)	1M12
Range of use	< 4000 m

Degree of protection

RDC104-4	IP00

Connections

Inputs/outputs

Connection type	PCB plug-in connector 0.5 x 0.5 mm
Arrangement of connections	double row 2 x 4 pins
Modular dimensions	2.00 mm
Contact surface	tinned
Pin length	2.5 mm
Soldering process for PCB	recommended: selective soldering

Connection measuring current transformer CTBC17

Maximum distance to connector	100 mm
Manufacturer type designation	Molex MicroFit 3.0 Header
Article number	43045-0607

The connector is not included in the scope of delivery.
For further information, refer to the original data sheet created by Molex.

Dimension diagram (dimensions in mm)

Side view;
Recommended drilling diameter: Ø 1,1mm

Front view

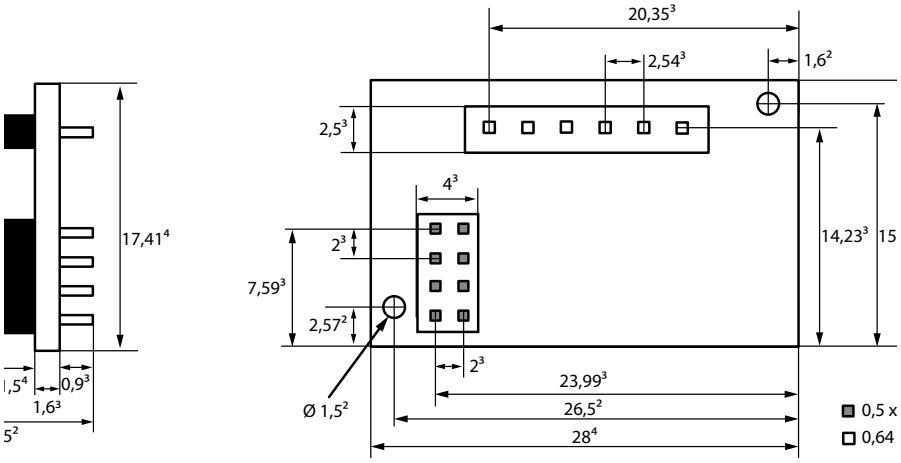

Tolerances dimensions	
x¹	± 0,05
x²	± 0,1
x³	± 0,2
x4	± 0,3

Wiring diagram

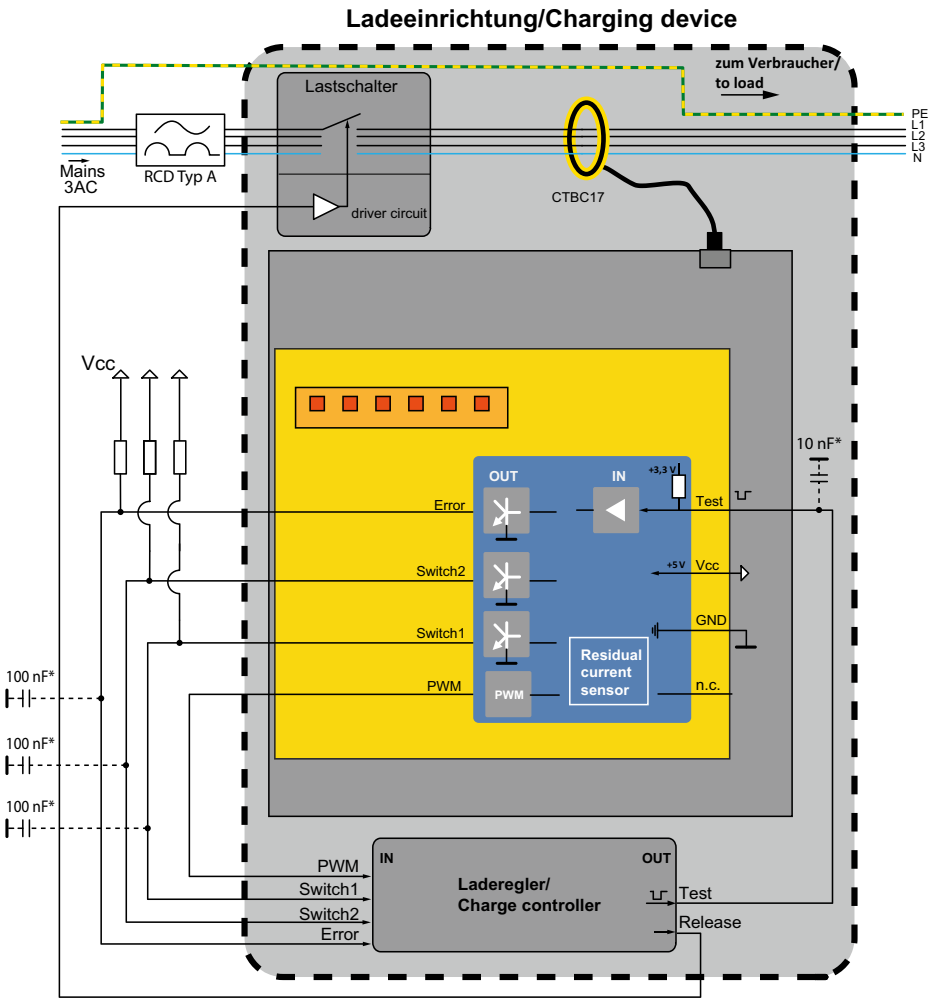

* Optional capacities for EMC optimisation

LINETRAXX® RCMB42…

AC/DC sensitive residual current monitor

Typical applications

- Residual current monitoring of AC charging stations for electric vehicles

Approvals

Device features

- DC sensor with additional AC tripping (type B characteristic)
- Response value 2 – AC/DC 30 mA: r.m.s. value measurement
- Response value 1: DC 6 mA
- Frequency range residual current 0…2000 Hz
- Frequency range load current 45…65 Hz
- Monitoring of the connection to the measuring current transformer
- Fully shielded residual current transformer to avoid influences due to external disturbances
- Connection via push-wire terminals
- Variants: One-channel and two-channel residual current measurement

Sandards

The LINETRAXX® RCMB42… series complies with the following device standard:

- IEC 62752

Further information

For further information refer to our product range on www.bender.de.

Ordering information

Type	Measuring range	Frequency range	Number of measuring current transformers (Ø 15 mm, 1.5 m cable)	Channels	Supply voltage U_s	Art. No.
RCMB420-2	DC 0…6 mA RMS 0…30 mA	0…2000 Hz	2	2 x residual current	AC 110…240 V, 50/60 Hz / DC 150…220 V	B74042500
RCMB420-25					DC 18…36 V	B74042503
RCMB422-2			1	1 x residual current	AC 110…240 V, 50/60 Hz / DC 150…220 V	B74042502
RCMB422-25					DC 18…36 V	B74042504

Delivery incl. measuring current transformers.
Measuring current transformers available with shorter cable on request (minimum order quantity 250 pcs.)

Accessories

Description	Art. No.
Mounting clip for screw mounting (1 piece per device)	B98060008

Insulation coordination according to IEC 60664-1

Definitions	
Supply circuit (IC1)	A1, A2
Measuring circuit (IC2)	Id1, Id2 Err, Test, GND
Output circuit 1 (IC3)	13, 14
Output circuit 2 (IC4)	23, 24
Monitored current circuit (IC5)	Un
Rated voltage	250 V
Overvoltage category (OVC)	III
Pollution degree	2
RCMB42…-25	
Rated insulation voltage	
IC1/IC2	40 V
(IC1-IC2)/(IC3-IC5)	250 V
IC3/(IC4-IC5)	250 V
IC4/IC5	250 V
Rated impulse voltage	
IC1/IC2	800 V
(IC1-IC2)/(IC3-IC5)	4 kV
IC3/(IC4-IC5)	4 kV
IC4/IC5	4 kV
Safe isolation (reinforced insulation) between	
(IC1-IC2)/(IC3-IC5)	OVC III, 250 V
(IC3-IC4)-IC5	OVC III, 250 V
Basic insulation between	
IC3/IC4	OVC III, 250 V
Functional insulation between	
IC1/IC2	DC 1 kV 60 s
Voltage tests (routine test) acc. to IEC 61010-1	
(IC1-IC2)/(IC3-IC4)	AC 2.2 kV
IC2-IC5	AC 2.2 kV
IC3/IC4	AC 2.2 kV
RCMB42…-2	
Rated insulation voltage	
IC1/(IC2-IC5)	250 V
IC2/(IC3-IC5)	250 V
IC3/IC4-IC5	250 V
IC4/IC5	250 V
Rated impulse voltage	
IC1/(IC2-IC5)	4 kV
IC2/(IC3-IC5)	4 kV
IC3/IC4-IC5	4 kV
IC4/IC5	4 kV
Safe isolation (reinforced insulation) between	
IC1/(IC2-IC5)	OVC III, 250 V
IC2-(IC3-IC5)	OVC III, 250 V
IC3-(IC4-IC5)	OVC III, 250 V
(IC3-IC4)-IC5	OVC III, 250 V
Basic insulation between	
IC3/IC4	OVC III, 250 V
Voltage tests (routine test) acc. to IEC 61010-1	
IC1/(IC2-IC5)	AC 2.2 kV
IC2/(IC3-IC5)	AC 2.2 kV
IC2/(IC3-IC4)	AC 2.2 kV
IC4-IC5	AC 2.2 kV

Supply voltage

RCMB42…-25	
Nominal voltage U_s	DC 24 V
Nominal voltage range U_s	DC 18…36 V
Nominal current	110 mA (RCMB420-25) 70 mA (RCMB422-25)
Internal protection against reverse polarity and short circuit	
RCMB42…-2	
Nominal voltage range U_s	AC 110…240 V, 50/60 Hz DC 150…220 V
Tolerance of the nominal voltage range of U_s	-5…+15 %
Nominal current	30 mA

Residual current measuring range

Rated frequency	0…2000 Hz
Measuring range	±300 mA

Response values

Residual current $I_{\Delta n1}$	6 mA
Response tolerance $I_{\Delta n1}$	-50…0 %
Residual current $I_{\Delta n2}$	30 mA (r.m.s.)
Response tolerance $I_{\Delta n2}$	
for $f \leq 1$ kHz	-20…0 %
for $f > 1$ kHz	-20…+100 %
Restart sequence value	
DC 6 mA	< 3 mA
AC/DC 30 mA (r.m.s.) for $f \leq 1$ kHz	< 12 mA
AC/DC 30 mA (r.m.s.) for $f > 1$ kHz	< 22 mA
Operating time t_{ae1} for 1 x $I_{\Delta n1}$	< 600 ms
Operating time t_{ae2} for	
1 x $I_{\Delta n2}$	< 180 ms
2 x $I_{\Delta n2}$	< 70 ms
5 x $I_{\Delta n2}$	< 20 ms

Inputs and operation

Test button	on front side
Test	internal/external
Cable length Test/Err, GND	< 10 m
Transformer connection	external
LED device function	green
LED alarm channel 1	yellow
LED alarm channel 2	yellow

Output

Common alarm signal Err	Open-Collector (npn)
No error	0…0.6 V
Error	11.4…12.6 V

Switching elements

Alarm relays K1, K2	$I_{\Delta n} \geq 6$ mA DC; $I_{\Delta n} \geq 30$ mA r.m.s.
Switching elements	2 x 1 N/O contacts
Operating principle	N/C operation
Electrical endurance, number of cycles	10,000

Contact data according to IEC 60947-5-1

Utilisation category	AC-14/DC-13
Rated operational voltage U_e	250 V
Rated operational current I_e	5 A
Minimum contact rating	1 mA at AC/DC ≥ 10 V

Environment/EMC

EMC	IEC 61851-1, IEC 61851-22
Operating temperature	-30…+75 °C

Classification of climatic conditions acc. to IEC 60721 (related to temperature and relative humidity)**:**

Stationary use (IEC 60721-3-3)	3K22
Transport (IEC 60721-3-2)	2K11
Long-term storage (IEC 60721-3-1)	1K21

Classification of mechanical conditions acc. to IEC 60721

Stationary use (IEC 60721-3-3)	3M11
Transport (IEC 60721-3-2)	2M4
Long-term storage (IEC 60721-3-1)	1M12

Connection

Connection type	push-wire terminals
Connection properties	
Rigid	0.2…2.5 mm² (AWG 24-14)
Flexible without ferrules	0.75…2.5 mm² (AWG 19-14)
Flexible with ferrules	0.2…1.5 mm² (AWG 24-16)
Stripping length	10 mm
Opening force	50 N
Test opening, diameter	2.1 mm

Technical data (continued)

Other	
Operating mode	continuous operation
Degree of protection, internal components	IP 30
Degree of protection, terminals	IP 20
Area of application	≤ 2000 m AMSL
Quick DIN rail mounting acc. to	IEC 60715
Screw mounting	2 x M4 with mounting clip
Documentation number	D00167

Measuring current transformer	
Diameter cable gland measuring current transformer	15 mm
Cable length	1.5 m
Max. cable cross section	4 x 6 mm²
Mounting	with cable ties
Connection to RCMB42…	plug-in connector with 6 poles
Rated voltage U_n	3/(N) AC 400/230 V
Rated current I_n	3x32 A
Rated impulse withstand voltage U_{imp}	4 kV

Dimension diagram (dimensions in mm)

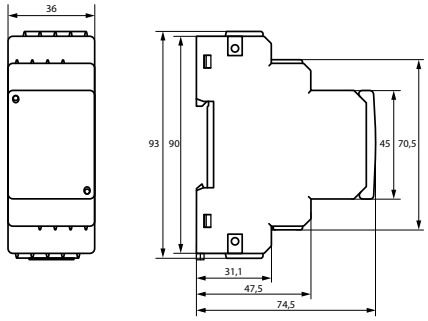

Wiring diagrams

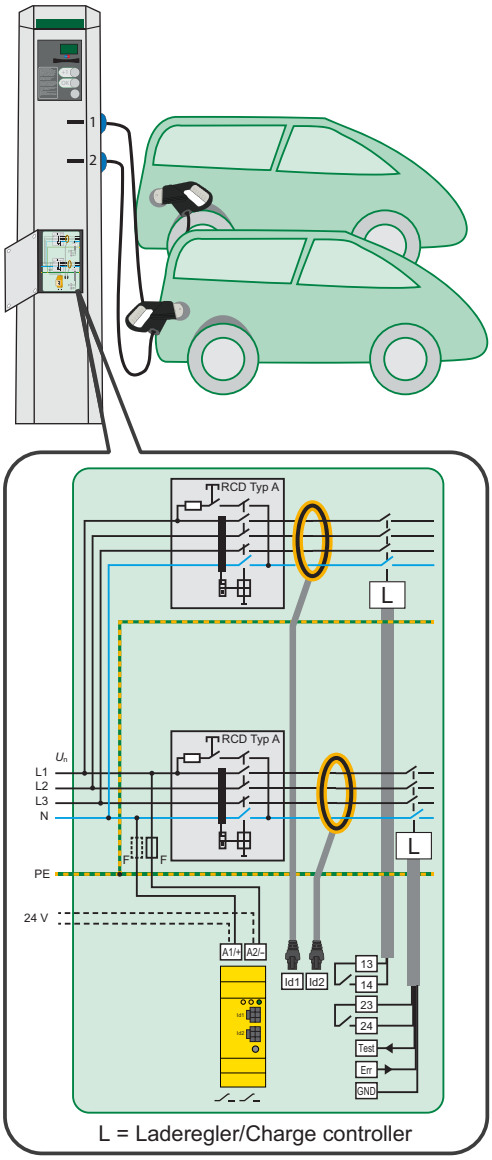

RCMB420EC with 2 channels with I_Δ = DC ≥ 6 mA and I_Δ = AC/DC ≥ 30 mA (r.m.s.)

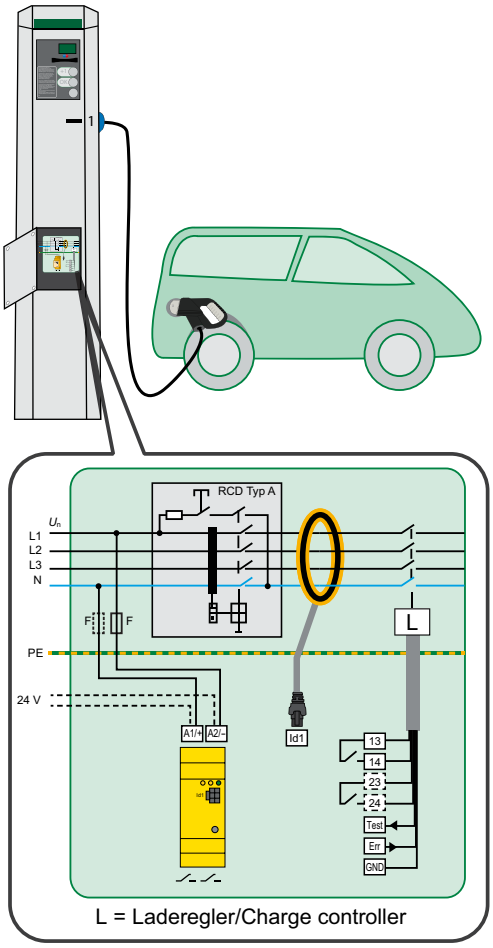

RCMB422EC with 1 channel with I_Δ = DC ≥ 6 mA and I_Δ = AC/DC ≥ 30 mA (r.m.s.)

Device overview neutral grounding resistance monitoring (NGR) LINETRAXX®

					
		LINETRAXX® NGRM500	**LINETRAXX® NGRM550**	**LINETRAXX® NGRM700**	**LINETRAXX® NGRM750**
Catalogue page		**224**	**224**	**229**	**229**
Special applications		Neutral grounding resistance monitoring (NGR monitoring)	Neutral grounding resistance monitoring (NGR monitoring)	Neutral grounding resistance monitoring (NGR monitoring)	Neutral grounding resistance monitoring (NGR monitoring)
System type	**HRG**	✓	–	✓	–
	LRG	–	✓	–	✓
Fault currents	∼	✓	✓	✓	✓
	⎓	✓	✓	✓	✓
Phase monitoring L1, L2, L3		–	–	✓	✓
System voltage L-L*		600…25000 V	600…25000 V	600…25000 V	600…25000 V
Harmonic analysis	**RMS 0…32**	✓	✓	✓	✓
	Analysis range	✓	✓	✓	✓
Relay operating mode		Configurable fail-safe or non-fail-safe	Configurable fail-safe or non-fail-safe	Configurable fail-safe or non-fail-safe	Configurable fail-safe or non-fail-safe
Communication		Webserver, BCOM, Modbus RTU, Modbus TCP	Webserver, BCOM, Modbus RTU, Modbus TCP	Webserver, BCOM, Modbus RTU, Modbus TCP	Webserver, BCOM, Modbus RTU, Modbus TCP
Maximum altitude		2000 m	2000 m	5000 m	5000 m
Mounting	**Detachable HMI for front panel mounting**	–	–	✓	✓
	DIN rail	✓	✓	–	–
	Screw mounting	–	–	✓	✓
Product details (Products on www.bender.de/en)					

* Freely configurable in the device, taking suitable coupling devices into account.

Device overview coupling devices for NGR monitoring

	CTUB103	RC48N	CD1000	CD1000-2	CD5000	CD14400	CD25000
							
Catalogue page	**235**	**238**	**241**	**243**	**245**	**247**	**249**
Special applications	AC/DC sensitive measuring current transformer	Ground-fault neutral-grounding monitor	Coupling device for HRG applications	Coupling device for HRG applications	Coupling device for HRG applications	Coupling device for HRG applications	Coupling device for HRG applications
System voltage L-L (U_{NGR} voltage)	–	–	Up to U_{LL} = 690 V (U_{NGR} = 400 V)	Up to U_{LL} =1000 V (U_{NGR} = 600 V)	Up to U_{LL} = 4300 V (U_{NGR} = 2500 V)	Up to U_{LL} =14400 V (U_{NGR} = 8400 V)	Up to U_{LL} =25 kV (U_{NGR} = 14.5 kV)
Mounting – **Screw mounting**	✓	✓	✓	✓	✓	✓	✓
Mounting – **DIN rail mounting**	✓	✓	–	–	–	–	–
Product details (Products on www.bender.de/en)							

Recommended minimum value R_{NGR} (tripping level 50 %)

		CD1000			CD1000-2				CD5000		CD14400					CD25000
	U_{sys}	400 V	600 V	690 V	400 V	600 V	690 V	1000 V	2400 V	4200 V	6 kV	6.6 V	7.2 kV	11 kV	14.4 kV	25 kV
I_{NGR}	1 A	231 Ω	346 Ω	398 Ω	231 Ω	346 Ω	398 Ω	577 Ω	1386 Ω	–	–	–	–	–	–	–
	5 A	46 Ω	69 Ω	80 Ω	46 Ω	69 Ω	80 Ω	115 Ω	277 Ω	485 Ω	693 Ω	762 Ω	831 Ω	1270 Ω	1663 Ω	–
	10 A	*(23 Ω)*	35 Ω	40 Ω	*(23 Ω)*	35 Ω	40 Ω	58 Ω	139 Ω	242 Ω	346 Ω	381 Ω	416 Ω	635 Ω	831 Ω	1443 Ω
	15 A	*(15 Ω)*	*(23 Ω)*	*(27 Ω)*	*(15 Ω)*	*(23 Ω)*	*(27 Ω)*	38 Ω	92 Ω	162 Ω	231 Ω	254 Ω	277 Ω	423 Ω	554 Ω	962 Ω
	20 A	–	*(17 Ω)*	*(20 Ω)*	–	*(17 Ω)*	*(20 Ω)*	29 Ω	69 Ω	121 Ω	*(173 Ω)*	191 Ω	208 Ω	318 Ω	416 Ω	722 Ω
	25 A	–	–	*(16 Ω)*	–	–	*(16 Ω)*	*(23 Ω)*	55 Ω	97 Ω	*(139 Ω)*	*(152 Ω)*	*(166 Ω)*	254 Ω	333 Ω	577 Ω
	30 A	–	–	–	–	–	–	*(19 Ω)*	*(46 Ω)*	81 Ω	*(115 Ω)*	*(127 Ω)*	*(139 Ω)*	212 Ω	277 Ω	481 Ω
	40 A	–	–	–	–	–	–	–	*(35 Ω)*	61 Ω	*(87 Ω)*	*(95 Ω)*	*(104 Ω)*	*(159 Ω)*	208 Ω	361 Ω
	50 A	–	–	–	–	–	–	–	*(28 Ω)*	*(48 Ω)*	–	*(76 Ω)*	*(83 Ω)*	*(127 Ω)*	*(166 Ω)*	289 Ω
	100 A	–	–	–	–	–	–	–	–	*(24 Ω)*	–	–	–	–	*(83 Ω)*	*(144 Ω)*

Temperature range -40…+70 °C, field calibration at 25 °C

(Limited temperature range 0…+40 °C, field calibration at 25 °C)

LINETRAXX® NGRM500 (HRG)/NGRM550 (LRG)

Neutral Grounding Resistor Monitor

Typical applications

- For use in high-resistance grounded systems (NGRM500)
- For use in low-resistance grounded systems (NGRM550)

Approvals

UL File Number: E493737, E173157

Device features

- Determination of R_{NGR} with passive and active measurement methods
- Continuous monitoring of the R_{NGR} even if the installation is de-energized;
- Alarm or trip on ground fault
- Monitoring of the current I_{NGR}
- Monitoring of the voltage U_{NGR}
- Ethernet communication
- Web server
- Language selection (German, English GB and US, Spanish, French)
- Test button (internal, external) with/without tripping
- FFT analysis of neutral current and voltage
- Pulser control for manual ground fault location
- Relay outputs for detection of ground faults and resistor faults
- Relay output for shutdown of the installation after a configurable time
- Can be combined with RCMS… for automatic shutdown of feeders
- Graphical user interface
- Wide supply voltage range for operating the NGR monitor
- Range of use up to 2000 m AMSL
- Fault/History memory
- Analogue output of measured values (0…10 V, 4…20 mA, etc., selectable parameters)
- Password protection
- Tripping on RMS, fundamental component signal or harmonics
- Detection of AC and DC ground faults
- Variants High Resistance Grounded (HRG), Low Resistance Grounded (LRG)

	HRG		LRG	
	NGRM500	NGRM700	NGRM550	NGRM750
$U_{sys\ LL}$	400…25000V			
$I_{NGR\ nom}$	0…100 A		10…2000 A	
$R_{NGR\ nom}$	15…5000 Ω		0,1…200 Ω	

Further information

For further information refer to our product range on www.bender.de.

Ordering information

Type	System type	Supply voltage U_s / Frequency range Hz	Art. No.
NGRM500	HRG	AC 48…240 V, 40…70 Hz DC 48…240 V	B94013500
NGRM550	LRG		B94013550

Suitable system components

Description	Type	Art. No.	Page
Coupling device	CD…	B980390…	**247**
Measuring current transformer	CTAC…	B981100…	**342**
	CTAS…	B981100…	**351**
	CTB31…CTB51	B980860…	**283**
	CTUB103…	B781200…	**241**
Voltage supply for measuring current transformers	STEP-PS	B940531…	**381**

Insulation coordination according to IEC 60664-1/IEC 60664-3/DIN EN 50178

Definitions	
Supply circuit (IC1)	(A1, A2)
Measuring circuit/Control circuit (IC2)	(RS, E, CT), (X1, ETH)
Output circuit 1 (IC3)	(11, 12, 14)
Output circuit 2 (IC4)	(21, 22, 24)
Output circuit 3 (IC5)	(31, 32, 34)
Rated voltage	250 V
Overvoltage category	III
Rated impulse voltage	
IC1/(IC2…5)	4 kV
IC2/(IC3…5)	4 kV
IC3/(IC4…5)	4 kV
IC4/(IC5)	4 kV
Rated insulation voltage	
IC1/(IC2…5)	250 V
IC2/(IC3…5)	250 V
IC3/(IC4…5)	250 V
IC4/(IC5)	250 V
Pollution degree exterior	3
Safe isolation (reinforced insulation) between	
IC1/(IC2…5)	overvoltage category III, 300 V
IC2/(IC3…5)	overvoltage category III, 300 V
IC3/(IC4…5)	overvoltage category III, 300 V
IC4/(IC5)	overvoltage category III, 300 V
Voltage tests (routine test) acc. to IEC 61010-1	
IC1/(IC2…5)	AC 2.2 kV
IC2/(IC3…5)	AC 2.2 kV
IC3/(IC4…5)	AC 2.2 kV
IC4/(IC5)	AC 2.2 kV

Supply voltage

Nominal supply voltage U_s	AC/DC, 48…240 V
for UL applications	AC/DC, 48…240 V
for AS/NZS 2081 applications	AC/DC, 48…230 V
Tolerance U_s	±15 %
Tolerance U_s (for UL applications)	–50…+15 %
Tolerance U_s (for AS/NZS 2081 applications)	–25…+20 %
Frequency range U_s	DC, 40…70 Hz
Power consumption (max.)	≤ 7 W / 16 VA

Monitoring R_{NGR}

Measuring input R_S	< 33 V RMS
Measuring range NGR (with R_S = 20 kΩ) active	0…10 kΩ
Measurement uncertainty for T = 0…+40 °C	±20 Ω
Measurement uncertainty for T = –40…+70 °C	±40 Ω
Measuring range NGR (with R_S = 100 kΩ) active	0…10 kΩ
Measurement uncertainty for T = 0…+40 °C	±30 Ω
Measurement uncertainty for T = –40…+70 °C	±80 Ω
HRG	
Setting range $R_{NGR\ nom}$	15 Ω…5 kΩ
Response value <$R_{NGR\ nom}$	10…90 % $R_{NGR\ nom}$
Response value >$R_{NGR\ nom}$	110…200 % $R_{NGR\ nom}$
LRG	
Setting range $R_{NGR\ nom}$	0.1…200 Ω
Response value >$R_{NGR\ nom}$	200…500 Ω
Response delay, NGR-fault relay	7 s (±2.5 s)
Response delay, trip relay	0…48 h

Monitoring I_{NGR}

Measuring circuit 5 A	
Nominal measuring current I_n	DC / 50/60 Hz / 10…3200 Hz 5 A
Maximum continuous current	2 x I_n
Overload capacity	10 x I_n for 0.03 s
Measurement accuracy	±2 % of I_n
Load	10 mΩ
Measuring circuit 50 mA	
Nominal measuring current I_n	DC / 50/60 Hz / 10…3200 Hz 50 mA
Maximum continuous current	2 x I_n
Overload capacity	10 x I_n for 2 s
Measurement accuracy	±2 % of I_n
Load	68 Ω
Measuring circuits 5 A and 50 mA	
Response value I_{NGR}	10…90 % $I_{NGR\ nom}$
Response delay, ground-fault relay	≤ 40 ms (±10 ms)
Response delay, trip relay (configurable)	100 ms…48 h, ∞
Tolerance t_{trip} when set to	
RMS	–20…0 ms
Fundamental	0…+150 ms (filter time)
Harmonics	0…+150 ms (filter time)
Measuring current transformer ratio primary	1…10,000
Measuring current transformer ratio secondary	1…10,000
Measuring range	2 x $I_{NGR\ nom}$

Coupling

R_S for U_{sys} ≤ 4.3 kV	CD1000, CD1000-2, CD5000 (20 kΩ)
R_S for U_{sys} > 4.3 kV	CD14400, CD25000 (100 kΩ)

Monitoring U_{NGR}

U_{NGR} with R_S = 20 kΩ	DC / 50/60 Hz / 10…3200 Hz; (400/√3) … ≤ (4300/√3) V
U_{NGR} with R_S = 100 kΩ	DC / 50/60 Hz / 10…3200 Hz; > (4.3 /√3) …(25/√3) kV
Measuring range	1.2 x $U_{NGR\ nom}$
Overload capacity	2 x U_{NGR} for 10 s
Measurement accuracy	2 % of $U_{NGR\ nom}$ with $U_{NGR\ nom}$ = ($U_{sys\ (L-L)}$/√3)
Voltage response value	10…90 % $U_{NGR\ nom}$
Response delay, ground-fault relay	≤ 40 ms (±10 ms)
Response delay, trip relay (configurable)	100 ms…48 h, ∞
Tolerance ttrip when set to	
RMS	–20…0 ms
Fundamental	0…+150 ms (filter time)
Harmonics	0…+150 ms (filter time)
DC immunity in case of active R_{NGR} measurement	
with R_S = 20 kΩ	DC ±12 V
with RS = 100 kΩ	DC ±60 V

Digital inputs

Galvanic separation	no
Length connecting cables	max. 10 m
U_{in}	DC 0 V, 24 V
Overload capacity	–5…32 V

Digital outputs

Galvanic separation	no
Length connecting cables	max. 10 m
Currents (sink) for each output	max. 300 mA
Voltage	24 V
Overload capacity	–5…32 V

Analogue output (M+)

Operating principle	linear
Functions	I_{NGR}, R_{NGR}
Current	0…20 mA (≤ 600 Ω), 4…20 mA (≤ 600 Ω), 0…400 µA (≤ 4 kΩ)
Voltage	0…10 V (≥ 1 kΩ), 2…10 V (≥ 1 kΩ)
Tolerance related to the current/voltage end value	±20 %

Ground-fault, NGR, trip relay

Switching elements	changeover contacts
Operating mode	configurable fail-safe/non-fail-safe
Electrical endurance, number of cycles	10,000
Switching capacity	2000 VA / 150 W

Contact data acc. to IEC 60947-5-1

Rated operational voltage AC	250 V/250 V
Utilisation category	AC-13/AC-14
Rated operational current AC	5 A/3 A
Rated operational current AC (for UL applications)	3 A/3 A
Rated operational voltage DC	220/110/24 V
Utilisation category	DC12
Rated operational current DC	0.1/0.2/1 A
Minimum current	1 mA at AC/DC > 10 V

Environment/EMC

EMC immunity (IEC 61000-6-2 / IEC 60255-26 Ed. 3.0)	DIN EN 61000-6-2
EMC emission (IEC 61000-6-4 / IEC 60255-26 Ed. 3.0)	DIN EN 61000-6-4
Operating temperature	-40…+60 °C
Operating temperature for UL applications	-40…+60 °C
Transport	–40…+85 °C
Long-term storage	–40…+70 °C
Humidity	≤ 98 %

Classification of climatic conditions acc. to IEC 60721 (related to temperature and relative humidity)**:**

Stationary use (IEC 60721-3-3)	3K22
Transport (IEC 60721-3-2)	2K11
Long-term storage (IEC 60721-3-1)	1K22

Technical data (continued)

Classification of mechanical conditions acc. to IEC 60721 / IEC 60255-21 / DIN EN 60068-2-6	
Stationary use	3M7
Transport	2M4
Long-term storage	1M12

Connection	
Screw-type terminals	
Tightening torque	0.5…0.6 Nm (5…7 lb-in)
Stripping length	7 mm
Recommended connecting cables	see overview in the manual
rigid/flexible	0.2…2.5 mm² (AWG 24-13)
flexible with ferrule with/without plastic sleeve	0.25…2.5 mm² (AWG 24-13)
Multiple conductor rigid	0.2…1 mm² (AWG 24-18)
Multiple conductor flexible	0.2…1.5 mm² (AWG 24-16)
Multiple conductor, flexible with ferrule without plastic sleeve	0.25…1 mm² (AWG 24-18)
Multiple conductor, flexible with TWIN ferrule with plastic sleeve	0.5…1,5 mm² (AWG 21-16)

Push-wire terminal X1	
Stripping length	10 mm
rigid/flexible	0.2…1.5 mm² (AWG 24-16)
flexible with ferrule without plastic sleeve	0.25…1.5 mm² (AWG 24-16)
flexible with ferrule with plastic sleeve	0.25…0.75 mm² (AWG 24-18)

Other	
Operating mode	continuous operation
Mounting	display-oriented
Operating altitude	≤ 2000 m AMSL
Degree of protection, internal components (DIN EN 60529)	IP30
Flammability class	UL 94V-0
Protective coating measurement equipment	SL1307, UL file E80315
Documentation number	D00373
Weight	< 500 g

Dimension diagram (dimensions in mm)

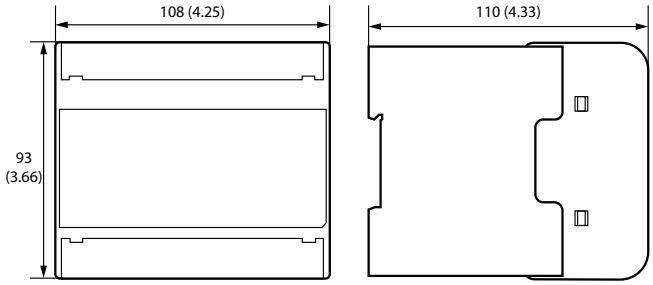

Connection star connection

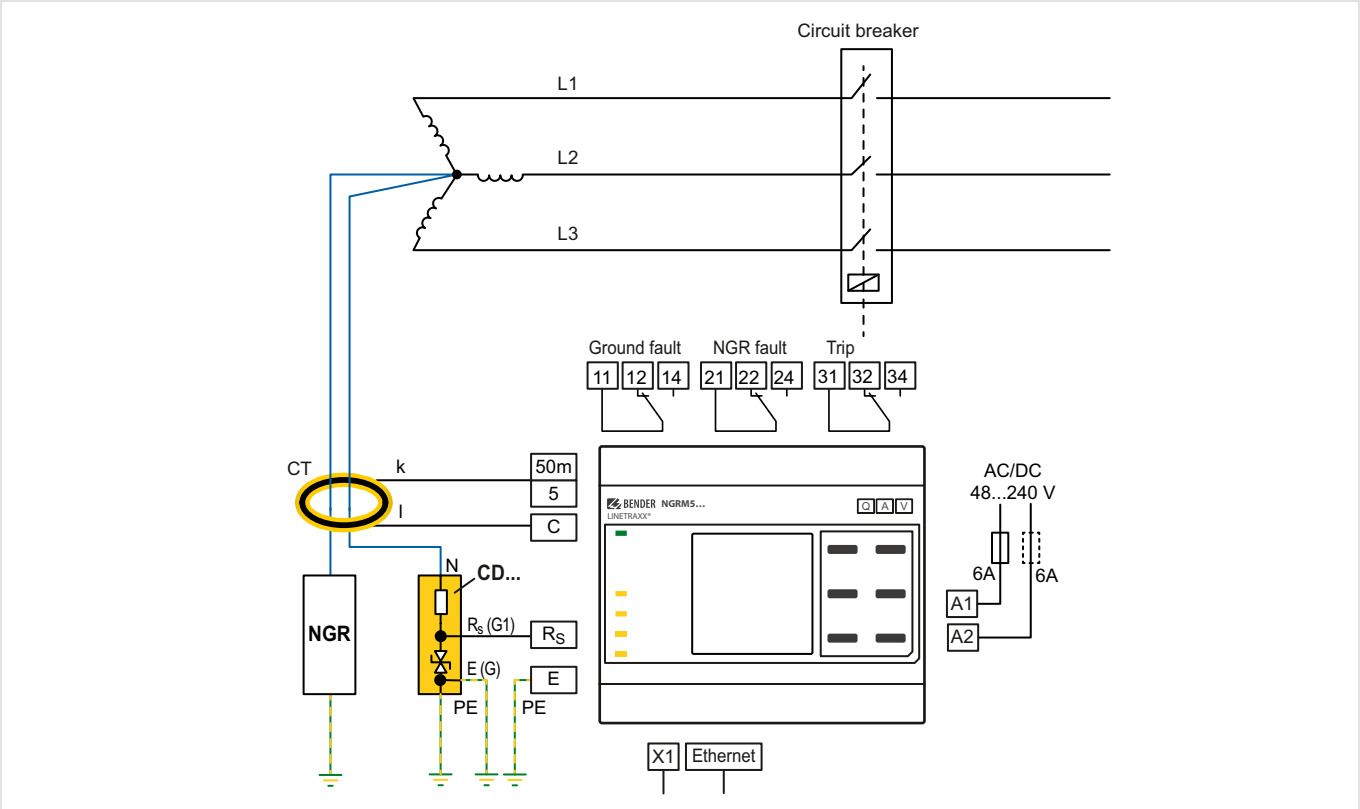

The "N" connection of the CD-series coupling device should be as close to the transformer star point as possible.

Connection Star connection with pulser

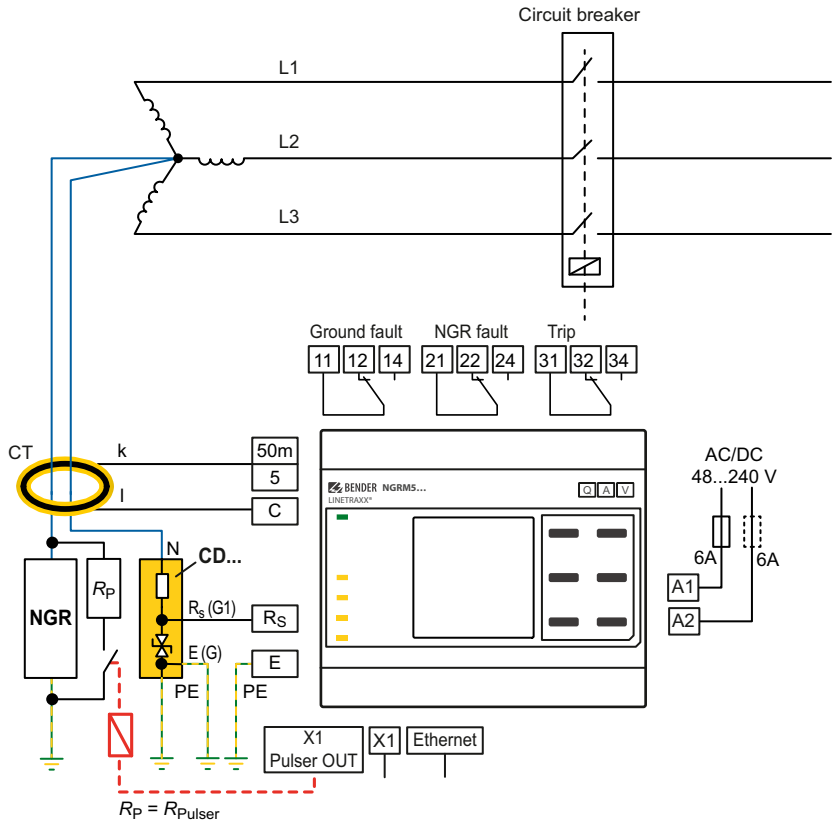

The "N" connection of the CD-series coupling device should be as close to the transformer star point as possible.
An intermediate relay may be required between the power contactor of the pulser and the digital output at X1 of the FP200-NGRM.

Connection artificial neutral (delta connection): zigzag transformer

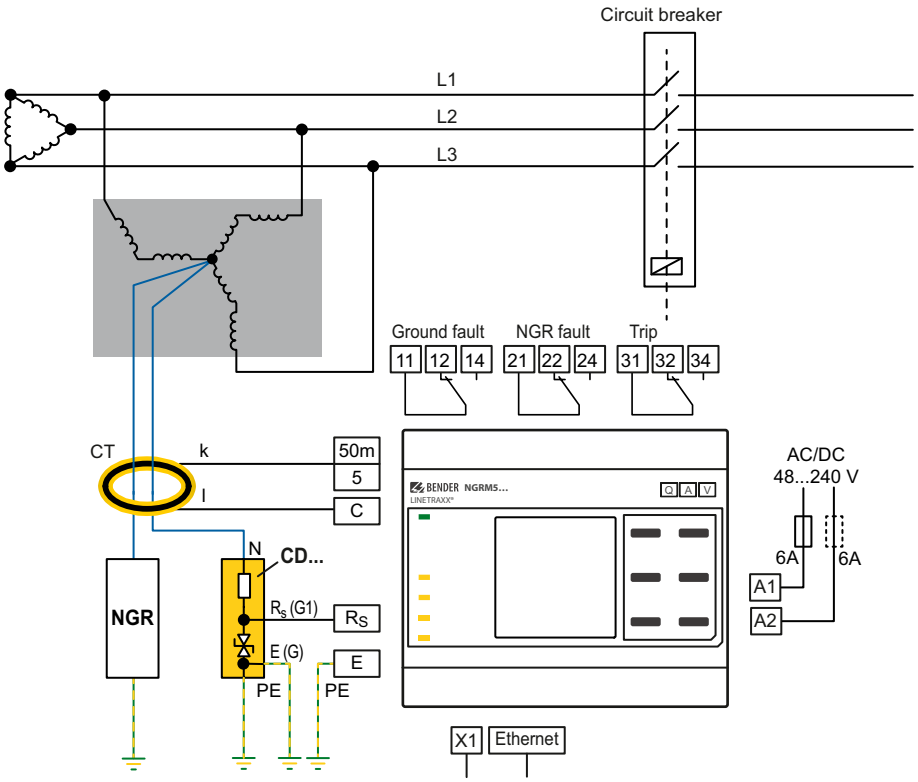

If no star point is available, the following circuit can create an artificial neutral.

Measuring current transformer connection

Depending on the system to be monitored, a suitable measuring current transformer has to be chosen. All common measuring current transformers (50 mA or 5 A on the secondary side) can be used. The following table helps you with the choice:

System type	AC + DC	AC	AC	AC
I_{NGR}	0,5…25 A	5…25 A	5…1000 A	10…2000 A
f	0…3800 Hz	42…3800 Hz	50/60 Hz	50/60 Hz
Transformation ratio Bender measuring current transformer	Measuring range (see CTUB103 manual) 5 A 100:1 10 A 200:1 25 A 500:1	600:1		
Connecting cable	max. 30 m	max. 40 m	max. 25 m: 4 mm²/AWG12 max. 40 m: 6 mm²/AWG10	
	provided cable or 0.75…1.5 mm²/AWG18…16			
$I_{\Delta n}$	~ ⎓	~	~	~
Type	CTUB103 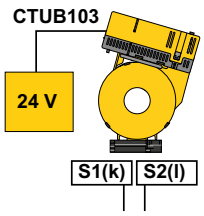	CTAC… / CTAS… 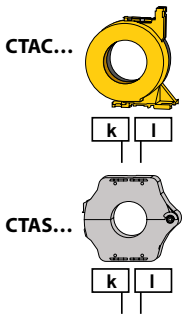	CTB31…51 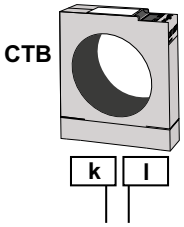	Any standard current transformer can be used.
CT: Terminal k	NGRM5…: **50 mA**	NGRM5…: **50 mA**	NGRM5…: **5 A**	NGRM5…: **5 A**
CT: Terminal l	NGRM5…: **C**	NGRM5…: **C**	NGRM5…: **C**	NGRM5…: **C**

LINETRAXX® NGRM700 (HRG)/NGRM750 (LRG)

Neutral Grounding Resistor Monitor

Typical applications

- For use in high-resistance grounded systems (NGRM700)
- For use in low-resistance grounded systems (NGRM750)

Approvals

UL File number: E493737, E173157

Device features

- Determination of R_{NGR} with passive and active measurement methods
- Continuous monitoring of the R_{NGR} even if the installation is de-energized;
- Alarm or trip on ground fault
- Monitoring of the current I_{NGR}
- Monitoring of the voltage U_{NGR}
- Faulted phase indication (optional; up to 690 V direct coupling, otherwise via potential transformers)
- Ethernet communication
- Web server
- Language selection (German, English GB and US, Spanish, French)
- Test button (internal, external) with/without tripping
- FFT analysis of neutral current and voltage
- Pulser control for manual ground fault location
- Relay outputs for detection of ground faults and resistor faults
- Relay output for shutdown of the installation after a configurable time
- Can be combined with RCMS… for automatic shutdown of feeders
- Graphical user interface
- Integrated wide-range power supply unit for operating the NGR monitor (AC/DC 24…240 V)
- Range of use up to 5000 m AMSL
- Fault/History memory
- Analogue output of measured values (0…10 V, 4…20 mA, etc., selectable parameter)
- Detachable HMI for door mounting
- Password protection
- Tripping on RMS, fundamental component signal or harmonics
- Detection of AC and DC ground faults
- Variants High Resistance Grounded (HRG), Low Resistance Grounded (LRG)

	HRG		LRG	
	NGRM500	NGRM700	NGRM550	NGRM750
$U_{sys\ LL}$	400…25000V			
$I_{NGR\ nom}$	0…100 A		10…2000 A	
$R_{NGR\ nom}$	15…5000 Ω		0,1…200 Ω	

Further information

For further information refer to our product range on www.bender.de.

Ordering information

Type	System type	Supply voltage U_S / Frequency range Hz	Art. No.
NGRM700	HRG	AC 24…240 V, 40…70 Hz DC 24…240 V	B94013700
NGRM750	LRG		B94013750

Suitable system components

Description	Type	Art. No.	Page
Coupling device	CD…	B980390…	**245**
Measuring current transformer	CTAC…	B981100…	**342**
	CTAS…	B981100…	**351**
	CTB31…CTB51	B980860…	**281**
	CTUB103…	B781200…	**239**
Voltage supply for measuring current transformers	STEP-PS	B940531…	**381**

Insulation coordination according to IEC 60664-1/IEC 60664-3/DIN EN 50178

Definitions	
Measuring circuit 1 (IC1)	(L1, L2, L3)
Supply circuit (IC2)	(A1, A2)
Measuring circuit/Control circuit (IC3)	(RS, E, CT), (X1, Ethernet)
Output circuit 1 (IC4)	(11, 12, 14)
Output circuit 2 (IC5)	(21, 22, 24)
Output circuit 3 (IC6)	(31, 32, 34)
Rated voltage	690 V
Overvoltage category	III
Rated impulse voltage	
IC1 / (IC2…6)	8 kV
IC2 / (IC3…6)	4 kV
IC3 / (IC4…6)	4 kV
IC4 / (IC5…6)	4 kV
IC5 / (IC6)	4 kV
Rated insulation voltage	
IC1 / (IC2…6)	800 V
IC2 / (IC3…6)	250 V
IC3 / (IC4…6)	250 V
IC4 / (IC5…6)	250 V
IC5 / (IC6)	250 V
Pollution degree exterior	3
Safe isolation (reinforced insulation) between	
IC1 / (IC2…6)	overvoltage category III, 800 V
IC2 / (IC3…6)	overvoltage category III, 300 V
IC3 / (IC4…6)	overvoltage category III, 300 V
IC4 / (IC5…6)	overvoltage category III, 300 V
IC5 / (IC6)	overvoltage category III, 300 V
Voltage tests (routine test) acc. to IEC 61010-1	
IC2 / (IC3…6)	AC 2.2 kV
IC3 / (IC4…6)	AC 2.2 kV
IC4 / (IC5…6)	AC 2.2 kV
IC5 / (IC6)	AC 2.2 kV

Supply voltage

Nominal supply voltage U_s	
≤ 2000 m	AC/DC, 24…240 V
≤ 2000 m (for UL applications)	AC/DC, 48…240 V
≤ 2000 m (for AS/NZS 2081 applications)	AC/DC, 48…230 V
> 2000…≤ 5000 m	AC/DC, 24…120 V
> 2000…≤ 5000 m (for UL and AS/NZS 2081 applications)	AC/DC, 48…120 V
Tolerance U_s	±15 %
Tolerance U_s (for UL applications)	–50…+15 %
Tolerance U_s (for AS/NZS 2081 applications)	–25…+20 %
Frequency range U_s	DC, 40…70 Hz
Power consumption (typ. 50/60 Hz)	≤ 6.5 W / 13 VA

Phase monitoring

Nominal measuring voltage U_n	3 AC 100…690 V, CAT III
Measuring range	1.2 x U_n
Measurement accuracy	±1 % of U_n
Power consumption per phase	≤ 0.5 W
Overload capacity	2 x U_n continuous
Input resistance	1.76 MΩ
PT ratio primary	1…10,000
PT ratio secondary	1…10,000
Measuring range with PT	100 V…25 kV

Monitoring R_{NGR}

Measuring input R_S	< 33 V RMS
Measuring range NGR (with R_S = 20 kΩ) active	0…10 kΩ
Measurement uncertainty for T = 0…+40 °C	±20 Ω
Measurement uncertainty for T = –40…+70 °C	±40 Ω
Measuring range NGR (with R_S = 100 kΩ) active	0…10 kΩ
Measurement uncertainty for T = 0…+40 °C	±30 Ω
Measurement uncertainty for T = –40…+70 °C	±80 Ω
HRG	
Setting range $R_{NGR\ nom}$	15 Ω…5 kΩ
Response value <$R_{NGR\ nom}$	10…90 % $R_{NGR\ nom}$
Response value >$R_{NGR\ nom}$	110…200 % $R_{NGR\ nom}$
LRG	
Setting range $R_{NGR\ nom}$	0.1…200 Ω
Response value >$R_{NGR\ nom}$	200…500 Ω
Response delay, NGR-fault relay	7 s (±2.5 s)
Response delay, trip relay	0…48 h

Monitoring I_{NGR}

Measuring circuit 5 A	
Nominal measuring current I_n	DC / 50/60 Hz / 10…3200 Hz 5 A
Maximum continuous current	2 x I_n
Overload capacity	10 x I_n for 0.03 s
Measurement accuracy	±2 % of I_n
Load	10 mΩ
Measuring circuit 50 mA	
Nominal measuring current I_n	DC / 50/60 Hz / 10…3200 Hz 50 mA
Maximum continuous current	2 x I_n
Overload capacity	10 x In for 2 s
Measurement accuracy	±2 % of I_n
Load	68 Ω
Measuring circuits 5 A and 50 mA	
Response value I_{NGR}	10…90 % $I_{NGR\ nom}$
Response delay, ground-fault relay	≤ 40 ms (±10 ms)
Response delay, trip relay (configurable)	100 ms…48 h, ∞
Tolerance t_{trip} when set to	
RMS	–20…0 ms
Fundamental	0…+150 ms (filter time)
Harmonics	0…+150 ms (filter time)
Measuring current transformer ratio primary	1…10,000
Measuring current transformer ratio secondary	1…10,000
Measuring range	2 x $I_{NGR\ nom}$

Coupling

R_S for U_{sys} ≤ 4.3 kV	CD1000, CD1000-2, CD5000 (20 kΩ)
R_S for U_{sys} > 4.3 kV	CD14400, CD25000 (100 kΩ)

Monitoring U_{NGR}

U_{NGR} with R_S = 20 kΩ	DC / 50/60 Hz / 10…3200 Hz; (400/√3) … ≤ (4300/√3) V
U_{NGR} with R_S = 100 kΩ	DC / 50/60 Hz / 10…3200 Hz; > (4.3 /√3) …(25/√3) kV
Measuring range	1.2 x $U_{NGR\ nom}$
Overload capacity	2 x U_{NGR} for 10 s
Measurement accuracy	2 % of $U_{NGR\ nom}$ with $U_{NGR\ nom}$ = ($U_{sys\ (L-L)}$/√3)
Voltage response value	10…90 % $U_{NGR\ nom}$
Response delay, ground-fault relay	≤ 40 ms (±10 ms)
Response delay, trip relay (configurable)	100 ms…48 h, ∞
Tolerance t_{trip} when set to	
RMS	–20…0 ms
Fundamental	0…+150 ms (filter time)
Harmonics	0…+150 ms (filter time)
DC immunity in case of active R_{NGR} measurement	
with R_S = 20 kΩ	DC ±12 V
with R_S = 100 kΩ	DC ±60 V

Digital inputs

Galvanic separation	no
Length connecting cables	max. 10 m
U_{in}	DC 0 V, 24 V
Overload capacity	–5…32 V

Digital outputs

Galvanic separation	no
Length connecting cables	max. 10 m
Currents (sink) for each output	max. 300 mA
Voltage	24 V
Overload capacity	–5…32 V

Analogue output (M+)

Operating principle	linear
Functions	I_{NGR}, R_{NGR}
Current	0…20 mA (≤ 600 Ω), 4…20 mA (≤ 600 Ω), 0…400 µA (≤ 4 kΩ)
Voltage	0…10 V (≥ 1 kΩ), 2…10 V (≥ 1 kΩ)
Tolerance related to the current/voltage end value	±20 %

Ground-fault, NGR, trip relay

Switching elements	changeover contacts
Operating mode	configurable fail-safe/non-fail-safe
Electrical endurance, number of cycles	10,000
Switching capacity	2000 VA / 150 W

Contact data acc. to IEC 60947-5-1

Rated operational voltage AC	250 V/250 V
Utilisation category	AC-13/AC-14
Rated operational current AC	5 A/3 A
Rated operational current AC (for UL applications)	3 A/3 A
Rated operational voltage DC	220/110/24 V
Utilisation category	DC12
Rated operational current DC	0.1/0.2/1 A
Minimum current	1 mA at AC/DC > 10 V

Environment/EMC

EMC immunity (IEC 61000-6-2 / IEC 60255-26 Ed. 3.0)	DIN EN 61000-6-2
EMC emission (IEC 61000-6-4 / IEC 60255-26 Ed. 3.0)	DIN EN 61000-6-4
Operating temperature	-40…+70 °C
Operating temperature for UL applications	-40…+60 °C
Transport	–40…+85 °C
Long-term storage	–40…+70 °C
Humidity	≤ 98 %

Classification of climatic conditions acc. to IEC 60721 (related to temperature and relative humidity)**:**

Stationary use (IEC 60721-3-3)	3K22
Transport (IEC 60721-3-2)	2K11
Long-term storage (IEC 60721-3-1)	1K22

Classification of mechanical conditions acc. to IEC 60721 / IEC 60255-21 / DIN EN 60068-2-6

Stationary use	3M12
Transport	2M4
Long-term storage	1M12

Connection

Screw-type terminals

Tightening torque	0.5…0.6 Nm (5…7 lb-in)
Conductor sizes	AWG 24-12
Stripping length	7 mm
rigid/flexible	0.2…2.5 mm²
flexible with ferrule with/without plastic sleeve	0.25…2.5 mm²
Multiple conductor, rigid	0.2…1 mm²
Multiple conductor flexible	0.2…1.5 mm²
Multiple conductor flexible with ferrule without plastic sleeve	0.25…1 mm²
Multiple conductor, flexible with TWIN ferrule with plastic sleeve	0.5…1.5 mm²

Push-wire terminals X1

Conductor sizes	AWG 24-16
Stripping length	10 mm
rigid/flexible	0.2…1.5 mm²
flexible with ferrule without plastic sleeve	0.25…1.5 mm²
flexible with ferrule with plastic sleeve	0.25…0.75 mm²

Other

Operating mode	continuous operation
Mounting	display-oriented
Operating altitude	≤ 5000 m AMSL
Degree of protection, internal components (DIN EN 60529)	IP30
Flammability class	UL 94V-0
Protective coating measurement equipment	SL1307, UL file E80315
Documentation number	D00292
Weight	1050 g

Dimension diagram NGRM7… (dimensions in mm (in))

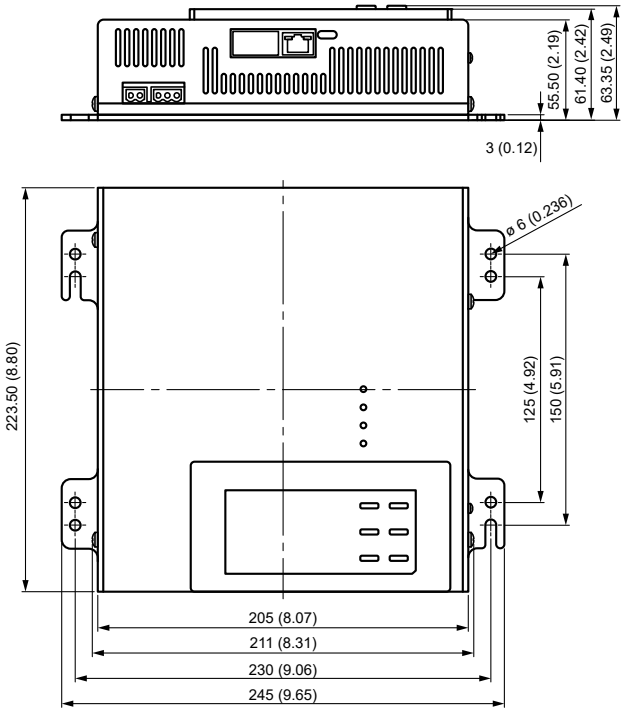

Dimension diagram FP200-NGRM (dimensions in mm (in))

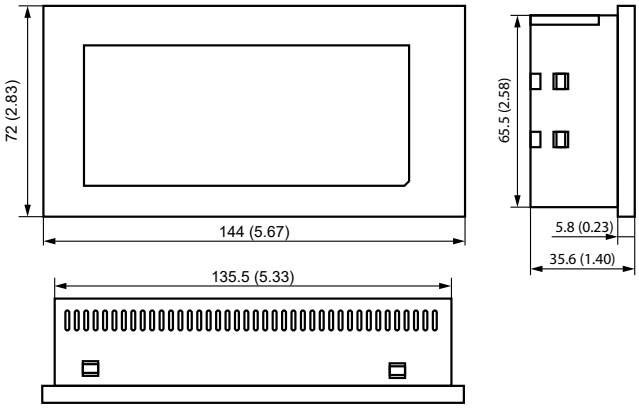

Connection star connection: $U_{sys} \leq 690$ V

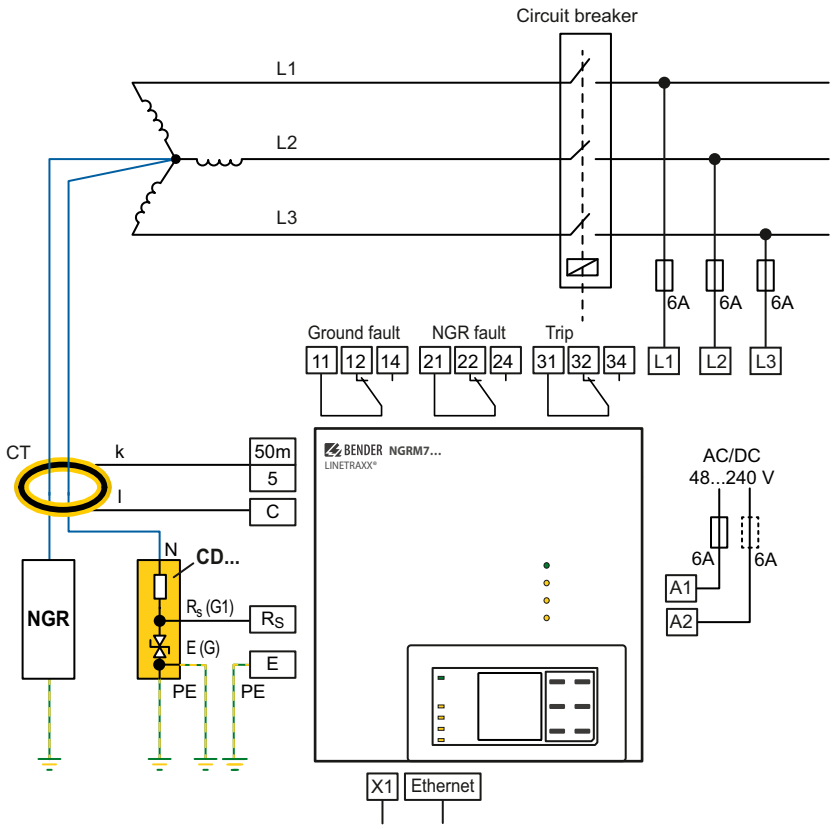

For these voltages, the phase monitor of the NGRM7… can be connected directly to the conductors to be monitored.

The "N" connection of the CD-series coupling device should be as close to the transformer star point as possible.

Connection Star connection: $U_{sys} \leq 690$ V with pulser

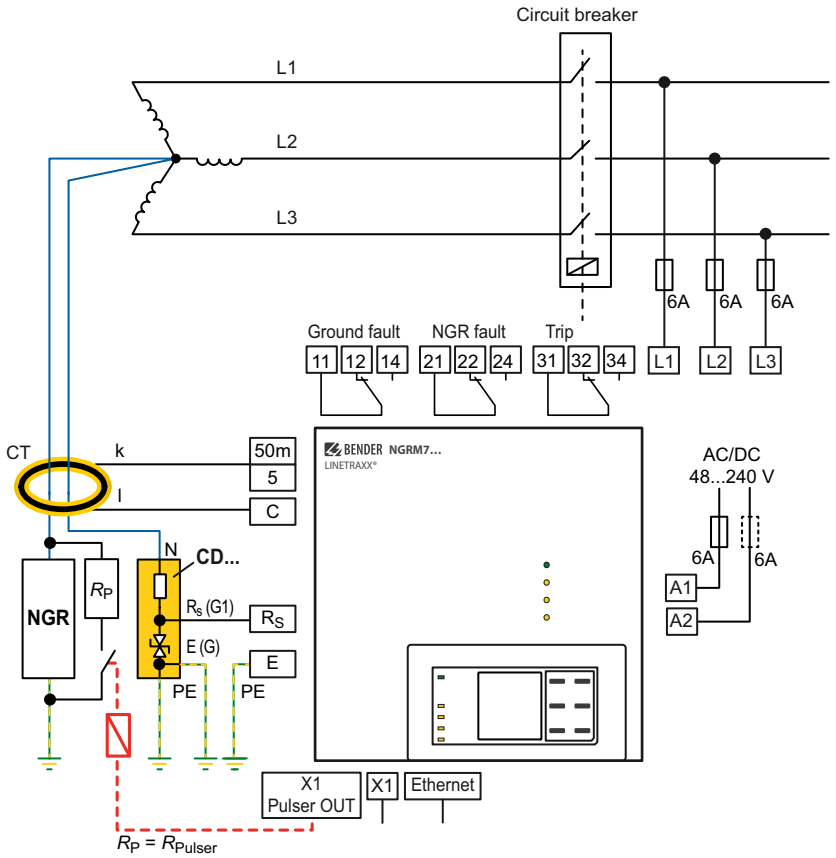

The "N" connection of the CD-series coupling device should be as close to the transformer star point as possible.
An intermediate relay may be required between the power contactor of the pulser and the digital output at X1 of the FP200-NGRM.

Connection star connection: U_{sys} > 690 V

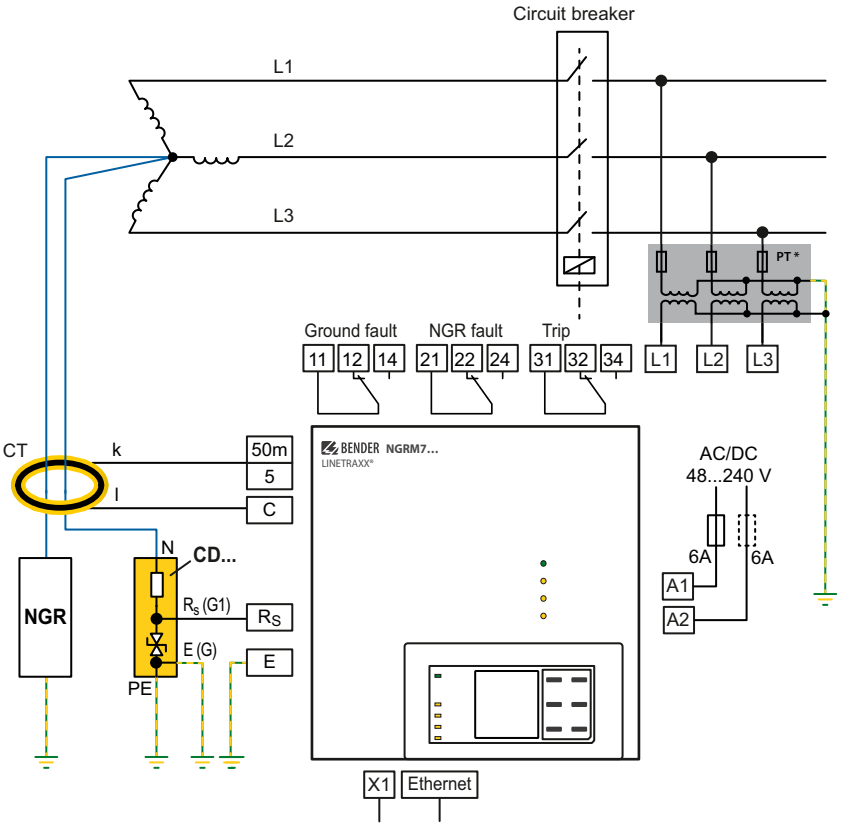

For these voltages, the phase monitor of the NGRM7… can only be connected to the conductors to be monitored via potential transformers (PT).

*Note: * PT ratio „primary: secondary" can be adjusted in the NGRM7….*

The "N" connection of the CD-series coupling device should be as close to the transformer star point as possible.

Connection artificial neutral (delta connection): zigzag transformer

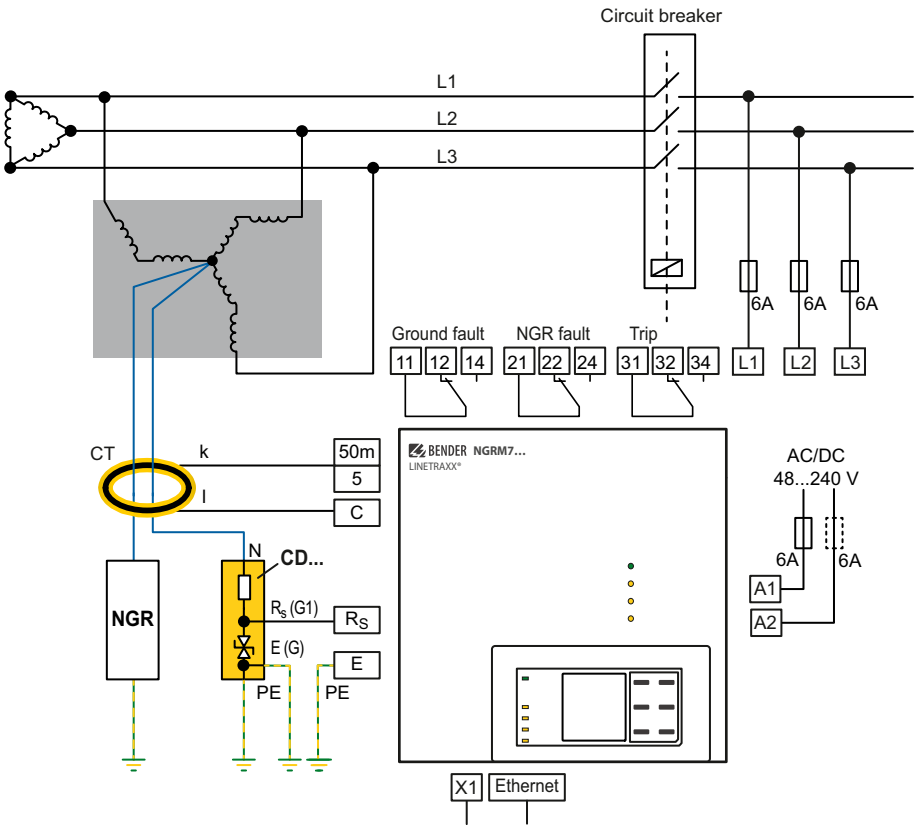

If no star point is available, the following circuit can create an artificial neutral.

Measuring current transformer connection

Depending on the system to be monitored, a suitable measuring current transformer has to be chosen. All common measuring current transformers (50 mA or 5 A on the secondary side) can be used. The following table helps you with the choice:

System type	AC + DC	AC	AC	AC
I_{NGR}	0.5…25 A	5…25 A	5…1000 A	10…2000 A
f	0…3800 Hz	42…3800 Hz	50/60 Hz	50/60 Hz
Transformation ratio Bender measuring current transformer	Measuring range (see CTUB103 manual) 5 A 100:1 10 A 200:1 25 A 500:1	600:1		
Connecting cable	max. 30 m	max. 40 m	max. 25 m: 4 mm²/AWG12 max. 40 m: 6 mm²/AWG10	
	provided cable or 0.75…1.5 mm²/AWG18…16			
$I_{\Delta n}$	~ ⎓	~	~	~
Type	CTUB103 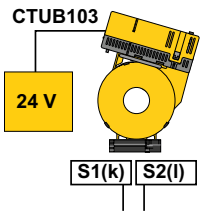	CTAC… / CTAS… 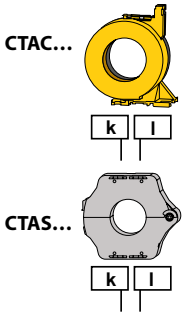	CTB31…51 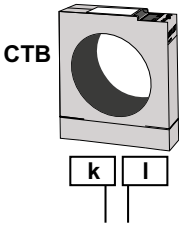	Any standard current transformer can be used.
CT: Terminal k	NGRM7…: **50 mA**	NGRM7…: **50 mA**	NGRM7…: **5 A**	NGRM7…: **5 A**
CT: Terminal l	NGRM7…: **C**	NGRM7…: **C**	NGRM7…: **C**	NGRM7…: **C**

LINETRAXX® CTUB103

AC/DC sensitive measuring current transformer (Type B)

Device features

- Multicolour LED for operation, fault and status messages
- Electronic module can be exchanged without mechanical separation of the primary conductors
- Monitoring of the connection to the measuring current transformer
- Evaluator: NGRM500, NGRM700

Further information

For further information refer to our product range on www.bender.de.

Typical applications

- Convert system leakage and fault currents into an evaluable measurement signal.

Approvals

Ordering details

CTUB103 set

Set	ø current transformers	Permissible measuring range	Art. No.
CTUB103-CTBC35	35	5 A, 10 A	B78120030
CTUB103-CTBC60	60	5 A, 10 A, 25 A	B78120031
CTUB103-CTBC120	120	5 A, 10 A, 25 A	B78120032

Ordering details for spare parts and accessories

Electronic modules

Type	Supply voltage U_s	Art. No.
CTUB103	DC 24 V	B78120052

Required terminals or connecting cables are optionally available.

Measuring current transformer cores

Type	ø current transformers	Art. No.
CTBC35	35 mm	B98120003
CTBC60	60 mm	B98120005
CTBC120	120 mm	B98120007

Accessories

Description	Art. No.
DIN rail mounting clip for CTBC35	B91080112

Included in the scope of delivery

Suitable system components

Description	max. connected current transformers	Type	Art. No.	Page
Voltage supply	4	STEP-PS/1 AC/24 DC/0.5	B94053110	**381**
	14	STEP-PS/1 AC/24 DC/1.75	B94053111	**381**
	34	STEP-PS/1 AC/24 DC/4.2	B94053112	**381**

Insulation coordination acc. to IEC 60664-1/IEC 60664-3

Definitions	
Measuring circuit (IC1)	primary conductors routed through thecurrent transformer
Secondary (IC2)	connections X plug
Rated voltage	800 V
Overvoltage category	III
Area of application	≤ 2000 m AMSL
Rated impulse voltage (IC1/IC2)	8 kV
Rated insulation voltage (reinforced insulation; IC1/IC2)	800 V
Pollution degree	2

Supply voltage CTUB103

Description	24 V, GND
Supply voltage U_s	DC 24 V
Operating range of U_s	±20 %
Ripple U_s	≤ 1 %
Power consumption	≤ 5.3 W
Inrush current	1 A for 1 ms

Measuring circuit

Internal diameter measuring current transformer	see dimension diagrams on page 4
Measurement accuracy	±2 %
Rated continuous thermal current I_{cth}	42 A
Rated short-time thermal current I_{th}	2.4 kA/1 s
Rated dynamic current I_{dyn}	6 kA/40 ms

Measuring ranges

Measuring range 1	5 A rms
Permanent overload capacity	10.5 A rms
	14.5 A peak
Scaling	5 A/50 mA, 100:1
Measuring range 2	10 A rms
Permanent overload capacity	21 A rms
	29.5 A peak
Scaling	10 A/50 mA, 200:1
Measuring range 3	25 A rms
Permanent overload capacity	42 A rms
	59 A peak
Scaling	25 A/50 mA, 500:1

Displays

Multicolour LED	red, green

Output

Name	S1 (k), S2 (l)
Max. voltage	±10 V
Max. current	±100 mA
Max. cable length	30 m
Load	68 Ω

Environment/EMC

EMC	IEC 61000-6
Operating temperature	-25…55 °C

Classification of climatic conditions acc. to IEC 60721 (related to temperature and relative humidity)**:**

Stationary use (IEC 60721-3-3)	3K22
Transport (IEC 60721-3-2)	2K11
Long-term storage (IEC 60721-3-1)	1K22

Classification of mechanical conditions acc. to IEC 60721

Stationary use (IEC 60721-3-3)	3M11
Transport (IEC 60721-3-2)	2M4
Long-term storage (IEC 60721-3-1)	1M12

Connection

Use 60 °C/75 °C copper lines only.

X plug

Manufacturer	Phoenix Contact
Type	DFMC 1.5/4-ST-3.5 BK
The connection conditions of the manufacturer apply.	
Connection properties	
rigid	0.2…1.5 mm² (AWG 24…16)
flexible	0.2…1.5 mm² (AWG 24…16)
with ferrule	0.25…0.75 mm²

Mounting CTBC…

Screw type	
CTBC35, CTBC60	DIN EN ISO 7045 - M5
CTBC120	DIN EN ISO 7045 - M6
Washer type	
CTBC35, CTBC60	DIN EN ISO 7089/7090 - 5
CTBC120	DIN EN ISO 7089/7090 - 6
Tightening torque	
CTBC35	0.6 Nm
CTBC60, CTBC120	1 Nm

Other

Operating mode	continuous operation
Mounting	any position
Degree of protection, built-in components (DIN EN 60529)	IP40
Degree of protection, terminals (DIN EN 60529)	IP20
Flammability class	UL94 V-0
Software	D591
Documentation number	D00410
Weight	
CTUB103- CTBC35	≤ 310 g
CTUB103- CTBC60	≤ 530 g
CTUB103- CTBC120	≤ 1460 g

Dimension diagrams

A

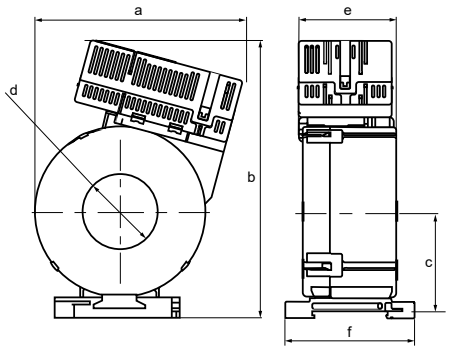

B

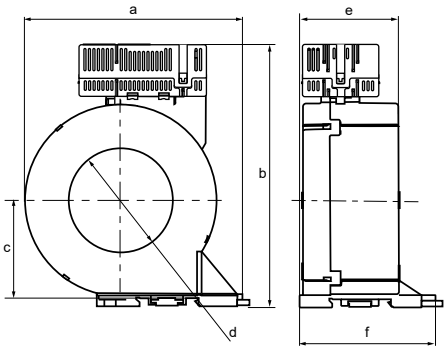

C

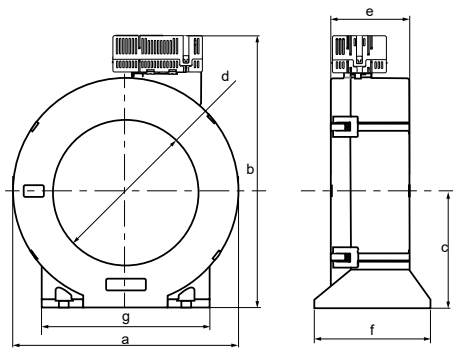

D

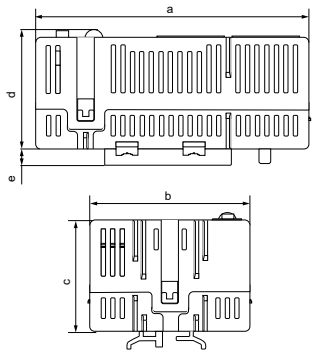

Dimensions in mm								
	Type	**a**	**b**	**c**	**d**	**e**	**f**	**g**
A	CTUB10…-CTBC35	97	130	47	ø 35	46	61	–
B	CTUB10…-CTBC60	126	151	57	ø 60	56	78	–
C	CTUB10…-CTBC120	188	225	96	ø 120	65	96	139
D	CTUB103	74	44	30	32	4,6	–	–

Tolerance: ±0,5 mm

Wiring diagram

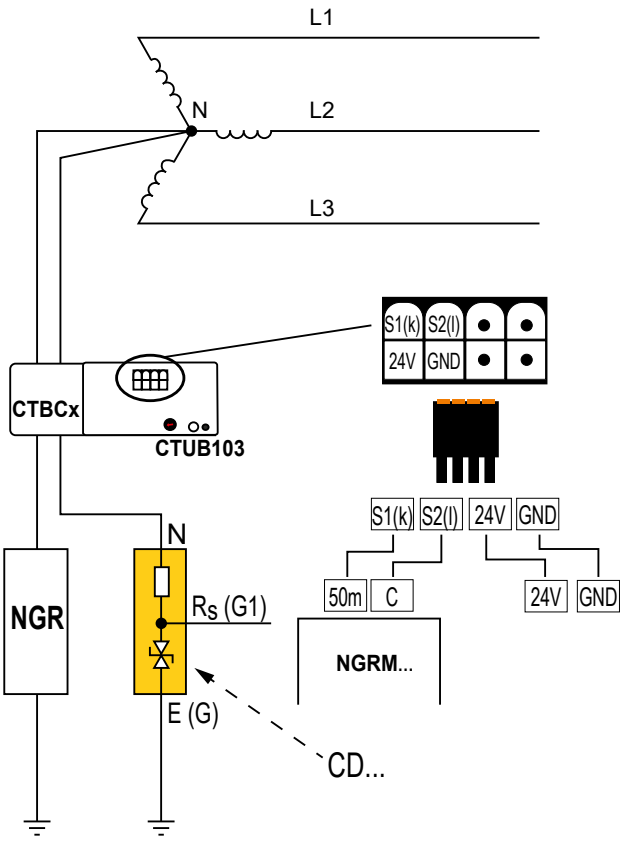

RC48N

Ground-fault neutral-grounding monitor

Typical applications

- High-resistance grounded installations with a limited fault current of 5…25 A

Approvals

Device features

- Ground-fault monitor for high-resistance grounded installations with a limited fault current of 5…25 A
- Three-in-one functionality: Residual current, voltage and grounding resistor continuity
- Measures the residual current by means of a Bender residual current transformer
- Alarm easily recognizable by LED lights
- Alarm relay with adjustable trip time
- Measures resistance value and voltage drop of the NGR via coupling devices
- Alarm easily recognizable by LED lights
- The alarm relay can be used for the tripping of a load switch
- Depending on the type of load switch the operating mode of the alarm relay can be set to N/O operation or N/C operation

Standards

- CSA M421-00: Use of electricity in mines

Further information

For further information refer to our product range on www.bender.de.

Ordering information

Type	Supply voltage Us	Response value, residual current	Art. No.
RC48N-935	AC/DC 60…264 V, 50…60 Hz	adjustable 0,1…1 A respectively 1…10 A	B94013005

Suitable system components

Description	Innendurchmesser	Type	Art. No.	Page
Coupling device	–	CD…	B980390…	**245**
Remote alarm indicator and operator panel	–	RI2000NC	B94071001	**–**
Residual current transformer	70 mm	W2-S70	B911732	**342**
	105 mm	W3-S105	B911733	**342**

Insulation coordination acc. to IEC 60664-1

Rated insulation voltage	AC 250 V
Rated impulse withstand voltage/pollution degree	2.5 kV/3

Voltage ranges

Supply voltage U_s	AC/DC 60…264 V, 50…60 Hz
Fuse	recommended: 6 A slow fuse
Power consumption	approx. 5.8 VA at AC 60 V approx. 8.5 VA at AC 264 V

Residual current monitoring

Response value, residual current	adjustable 0.1…1 A respectively 1…10 A
Accuracy	+0…-25 %
Response delay	adjustable 0.1…2 s
Accuracy of response delay	±20 %
Continuous short circuit current	200 A 2500 A for 2 s
Operating mode	latching

Ground conductor monitoring

Response value, voltage measurement	adjustable 20…400 V
Accuracy	± 10 %
Response value, neutral grounding resistor at $U_n = 0$ V	2 kΩ
Accuracy	+5…-2 % of the coupling resistance
Response time	5 s ±20 %
Operating mode	latching

Inputs

Connection to the residual current transformer:	
Single wire 0.75 mm² (AWG 18)	up to 1 m (3′)
Single wire, twisted 0.75 mm² (AWG 18)	1…10 m (3…30′)
Shielded cable 0.75 mm² (AWG 18) (shield to Ground)	10…25 m (30…75′)
Connection to the remote alarm indicator and operator panel RI2000NC:	
Single wire 0.75 mm² (AWG 18)	0…10 m (0…30′)

Outputs

Switching elements (alarm relay)	2 changeover contacts
Rated contact voltage	AC 250 V/DC 300 V
Limited making capacity	AC/DC 5 A
Limited breaking capacity	AC/DC 2/0.2 A
Permissible number of operations	12 000 cycles
Operating mode, alarm relay, selectable	N/O operation/N/C operation
Switching elements (GFA, NRA)	2 NO contacts
Rated contact voltage	AC 250 V/DC 300 V
Limited making capacity	AC/DC 5 A
Limited breaking capacity	AC/DC 2/0.2 A
Permissible number of operations	12 000 cycles

Type tests

Test of the electromagnetic compatibility (EMC)	
Immunity	according to IEC 62020:2003-11
Emissions	according to EN 50081
Emissions according to EN 55011/CISPR11	Class A

Environment

Operating temperature	-40…+60 °C (233…333 K)
Storage temperature	-55…+80 °C (218…353 K)
Climatic class according to IEC 60721	3K22

Connection

Connection type	screw terminals
Wire cross section, single wire	0.2…4 mm² (AWG 24-12)
Wire cross section, flexible	0.2…2,5 mm² (AWG 24-14)

Other

Operating mode	continuous operation
Mounting	any position
Protection class	according to DIN EN 60529
Built-in components	IP30
Terminals	IP20
Flammability class	UL94V-0
Documentation number	D00426
Weight	approx. 350 g

Dimension diagram (dimensions in mm (inch))

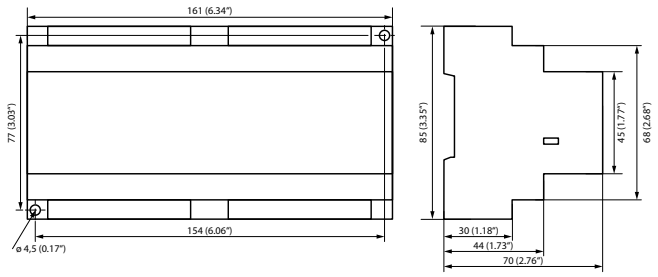

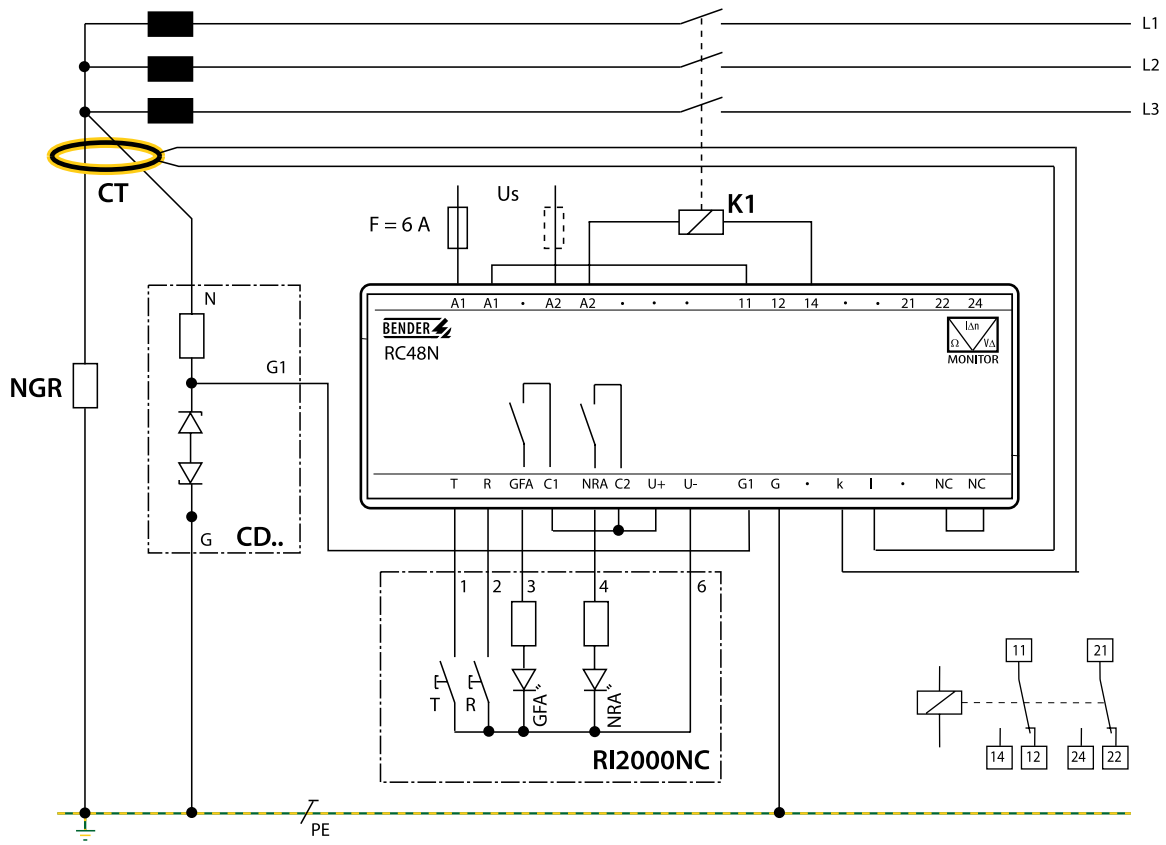

Connections

A1, A2	Connection supply voltage U_S.
11, 12, 14 **21, 22, 24**	Two voltage free changeover contacts, trip in case of alarm. N/C or N/O operation selectable.
G, G1	Connection, coupling devices CD1000 or CD5000
k, l	Connection, residual current transformer
NC, NC	Select N/O operation or N/C operation for the free changeover contacts: Bridge open: N/O operation Bridge closed: N/C operation (factory setting)

Connection of the remote alarm indicator and operator panel RI2000NC

T	Connection external TEST button
R	Connection external RESET button
GFA	Connection external “Alarm Ground Fault“ LED
NRA	Connection external “Alarm Resistor Fault“ LED
U+, U-	Output DC 12 V, for the supply of the remote alarm indicator and operator panel RI2000NC.
C1, C2, U+	Bridge supplies the remote alarm indicator and operator panel RI2000NC with supply voltage from the RC48N.

CD1000
Coupling device

Device features

- Coupling device for NGRM
- Range of use up to AC 690 V/DC 400 V system voltage
- Range of use up to 2000 m

Approvals

Typical applications

- The coupling device is suitable for HRG applications up to AC 690 V and/or DC 400 V.

Further information

For further information refer to our product range on www.bender.de.

Ordering information

Type	U_{LL}	U_{NGR}	Art. No.
CD1000	up to 690 V	400 V	B98039010

Technical data

Insulation coordination DIN EN 50178:1997

Definition	
Measuring circuit (IC1)	N
Output circuit (IC2)	G1
Protective circuit (IC3)	G, PE
Rated voltage	400 V
Overvoltage category	III
Pollution degree	2
Rated insulation voltage	
no galvanic separation between the circuits!	
IC1/(IC2 – IC3)	400 V
IC2/IC3	50 V

Voltage range

U_n	DC, 50/60 Hz, 10…3200 Hz 400 V
I_n	30 mA
Overload capacity	1.15 x U_n for < 30 minutes

Resistance

20 kΩ	±5 %
Temperature coefficient	25 ppm/K

Environment

Ambient temperature	-40…+70 °C
Ambient temperature for UL	-40…+60 °C
Humidity	≤ 98 %

Classification of climatic conditions acc. to IEC 60721
(related to temperature and relative humidity)

Stationary use (IEC 60721-3-3)	3K22
Transport (IEC 60721-3-2)	2K11
Long-term storage (IEC 60721-3-1)	1K22

Classification of mechanical conditions acc. to IEC 60721

Stationary use	3M12
Transport	2M4
Long-term storage	1M12

Connection

Tightening torque	0.5…0.6 Nm (4,4…5,3 lb-in)
Conductor sizes	AWG 24-12
Stripping length	7 mm
Conductor, rigid	0.2…4 mm²
Conductor, flexible	0.2…2.5 mm²
Multiple conductor, flexible with ring cable lug	
without plastic sleeve	0.25…1.5 mm²
with plastic sleeve	0.25…2.5 mm²

Other

Operating mode	continuous operation
Mounting	any position
Screw type mounting screws	M4x30
Tightening torque mounting screws	2.5 Nm (22.1 lb-in)
Operating altitude	up to 2000 m AMSL
Degree of protection, internal components (DIN EN 60529)	IP30
Flammability class	UL94 HB
Documentation number	D00397
Weight	< 190 g

Dimension diagram (dimensions in mm)

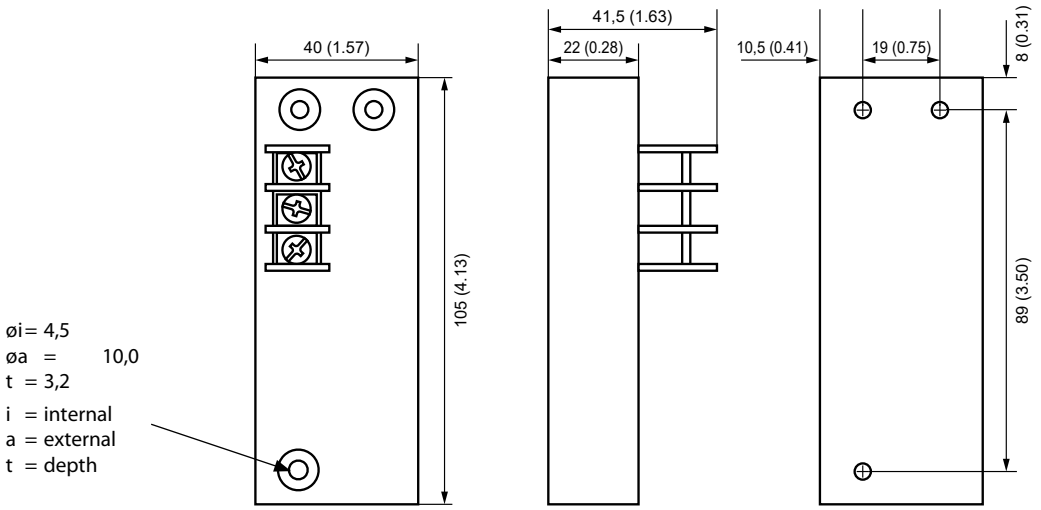

Wiring diagram

NGR monitor

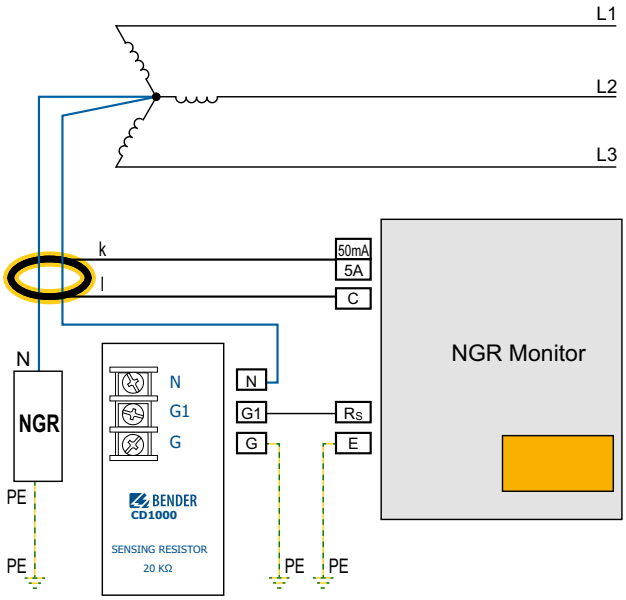

RC48N

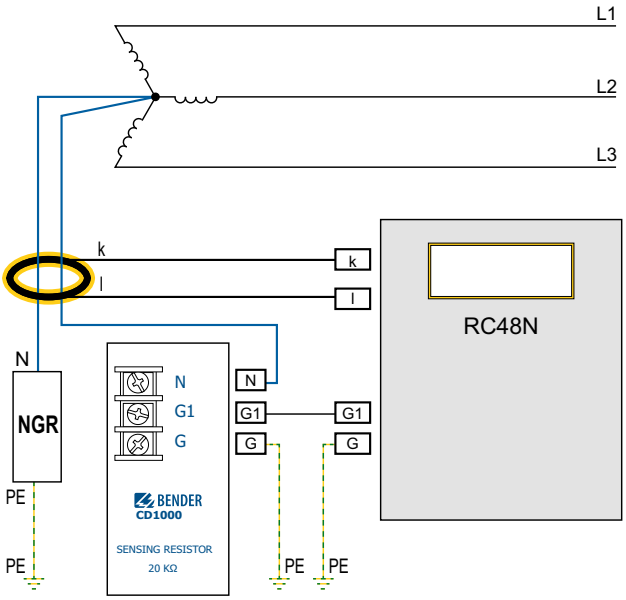

Internal wiring diagram CD1000

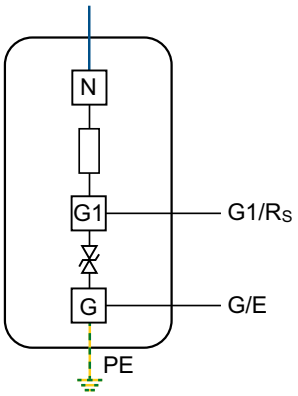

Terminal	Use	Connecting cable	
		Metrical	Imperial
N	Connection to the star point of the HRG system	1.5 mm²	AWG16
G1	Connection to R_S of the NGRM…		
G	Connection to E of the NGRM…; internally connected to PE		
PE	Connection to enclosure	≥ 1.5 mm²	≥ AWG16

CD1000-2

Coupling device

Typical applications

- The coupling device is suitable for HRG applications up to AC 1000 V and/or DC 690 V.

Device features

- Coupling device for NGRM
- Range of use up to AC 1000 V/DC 600 V system voltage
- Application up to 5000 m

Approvals

Further information

For further information refer to our product range on www.bender.de.

Ordering information

Type	U_{LL}	U_{NGR}	Art. No.
CD1000-2	up to 1000 V	600 V	B98039053

Technical data

Insulation coordination DIN EN 50178:1997

Definition	
Measuring circuit (IC1)	N
Output circuit (IC2)	R_S
Protective circuit (IC3)	E, PE
Rated voltage	600 V
Overvoltage category	III
Pollution degree	2
Rated insulation voltage	
No galvanic separation between the circuits!	
IC1/(IC2 – IC3)	600 V
IC2/IC3	50 V

Voltage range

U_n	DC, 50/60 Hz, 10…3200 Hz 600 V
I_n	30 mA
Overload capacity	1.15 x U_n for < 30 minutes

Resistance

20 kΩ	±0.5 %
Temperature coefficient	20 ppm/K

Environment

Ambient temperature	-40…+70 °C
Ambient temperature for U_L	-40…+60 °C
Humidity	≤ 98 %

Classification of climatic conditions acc. to IEC 60721

(related to temperature and relative humidity)

Stationary use (IEC 60721-3-3)	3K22
Transport (IEC 60721-3-2)	2K11
Long-term storage (IEC 60721-3-1)	1K22

Classification of mechanical conditions acc. to IEC 60721

Stationary use	3M12
Transport	2M4
Long-term storage	1M12

Connection

Tightening torque	0.5…0.6 Nm (4.4…5.3 lb-in)
Conductor sizes	AWG 24-12
Stripping length	7 mm
Conductor, rigid	0.2…4 mm²
Conductor, flexible	0.2…2.5 mm²
Multiple conductor, flexible with ferrule	
without plastic sleeve	0.25…1.5 mm²
with plastic sleeve	0.25…2.5 mm²
Multiple conductor, flexible with TWIN ferrule	
with plastic sleeve	0.5…1.5 mm²

Other

Operating mode	continuous operation
Mounting	any position
Screw type mounting screws	M4x30
Tightening torque mounting screws	2.5 Nm (22.1 lb-in)
Operating altitude	up to 5000 m AMSL
Degree of protection, internal components (DIN EN 60529)	IP30
Flammability class	UL 94V-0
Documentation number	D00345
Weight	< 700 g

Dimension diagram (dimensions in mm (in))

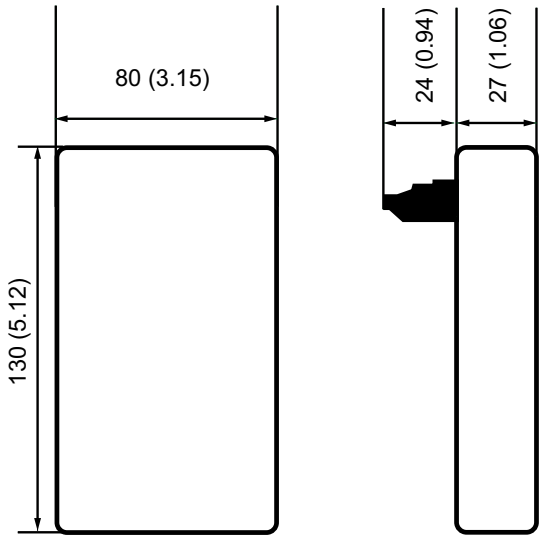

Screw mounting (dimensions in mm (in))

The device is suitable for screw mounting. For U_{LL} > 690 V, a cooling surface of 300 x 300 mm (11.81 in²) must be provided.

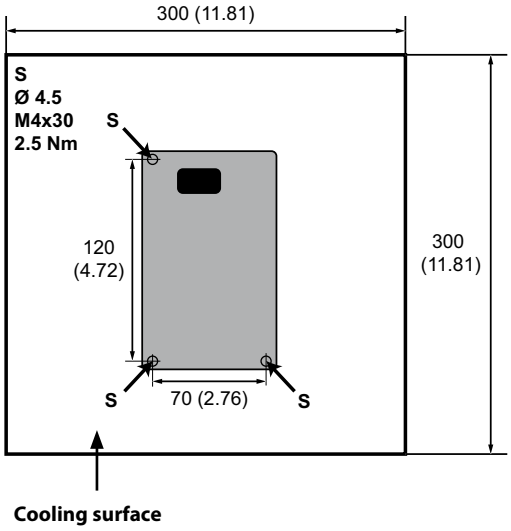

Wiring diagram

Wiring diagram

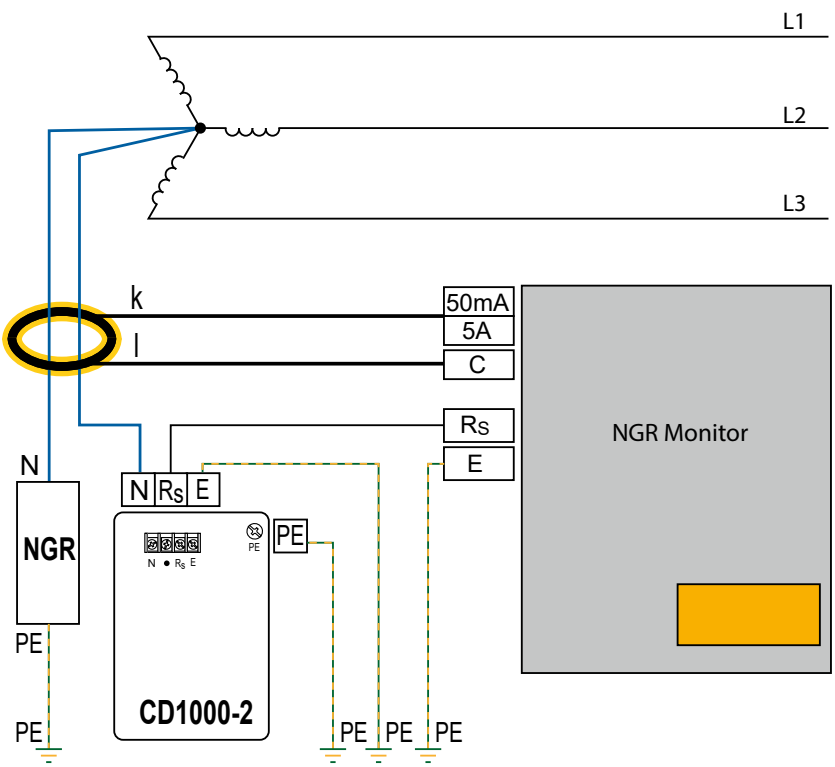

Internal wiring diagram CD1000-2

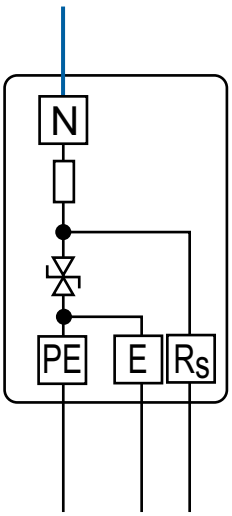

Cable:
1.5 mm² (AWG16)

So that the connection between NGR and star point is also monitored, the „N" terminal of the CD1000-2 should be connected directly to the star point of the transformer.
A direct connection between the „N" connections of the CD1000-2 and the NGR is not recommended, as in this case a line interruption between the star point and the NGR connection „N" would not be monitored.

Terminal	Use	Connecting cable	
		Metrical	Imperial
N	Connection to the star point of the HRG system	1.5 mm²	AWG16
R_S	Connection to R_S of the NGRM…		
E	Connection to protective earth conductor (internally connected to PE)		
PE	Connection to the protective conductor (internally connected to E), cable lug M4	≥ 1,5 mm²	≥ AWG16

CD5000

Coupling device

Typical applications

- The coupling device is suitable for HRG applications up to AC 4300 V and/or DC 2500 V.

Device features

- Coupling device for NGRM
- Range of use up to AC 4300 V/DC 2500 V system voltage
- Range of use up to 5000 m

Approvals

Further information

For further information refer to our product range on www.bender.de.

Ordering information

Type	U_{LL}	U_{NGR}	Art. No.
CD5000	up to 4300 V	2500 V	B98039011

Technical data

Insulation coordination DIN EN 50178:1997

Definition	
Measuring circuit (IC1)	N
Output circuit (IC2)	G1
Protective circuit (IC3)	G, PE
Rated voltage	3 kV
Overvoltage category	III
Pollution degree	2
Rated insulation voltage	
no galvanic separation between the circuits!	
IC1/(IC2 – IC3)	3 kV
IC2/IC3	50 V

Voltage range

U_n	DC, 50/60 Hz, 10…3200 Hz 2500 V
I_n	125 mA
Overload capacity	1.15 x U_n for < 5 minutes

Resistance

20 kΩ	±1 %
Temperature coefficient	20 ppm/K

Environment

Ambient temperature	-40…+70 °C
Ambient temperature for U_L	-40…+60 °C
Humidity	≤ 98 %

Classification of climatic conditions acc. to IEC 60721
(related to temperature and relative humidity)

Stationary use (IEC 60721-3-3)	3K22
Transport (IEC 60721-3-2)	2K11
Long-term storage (IEC 60721-3-1)	1K22

Classification of mechanical conditions acc. to IEC 60721

Stationary use	3M12
Transport	2M4
Long-term storage	1M12

Connection

Tightening torque G1 and G	0.5…0.6 Nm (4,4…5,3 lb-in)
Conductor sizes	AWG 24-12
Connection G1 and G	cable lug
Conductor	≥ 1.5 mm²
Connection PE	cable lug M6
Conductor	≥ 2.5 mm²
Connection N (use minimum 110 °C conductor)	cable lug M6, M10

Other

Operating mode	continuous operation
Mounting	any position
Operating altitude	up to 5000 m AMSL
Degree of protection, internal components (DIN EN 60529)	IP0
Flammability class	UL 94V-0
Documentation number	D00398
Weight	< 3800 g

Dimension diagram (dimensions in mm (in))

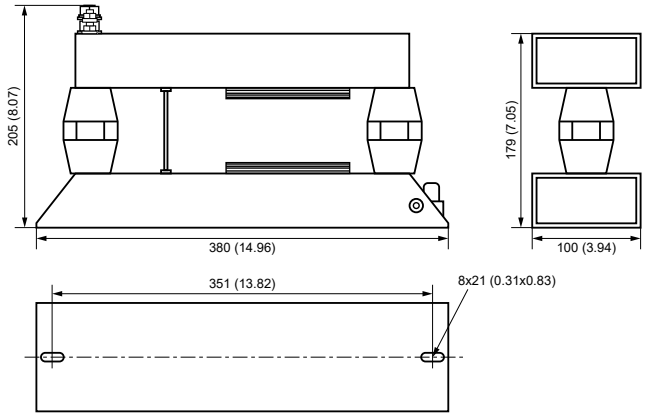

Wiring diagram

NGR monitor

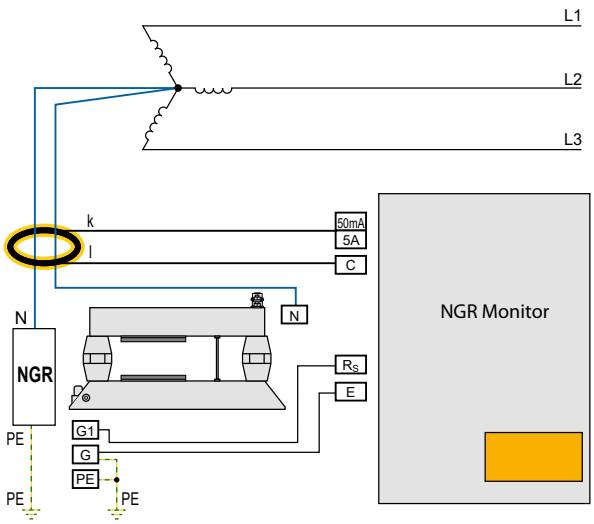

RC48N

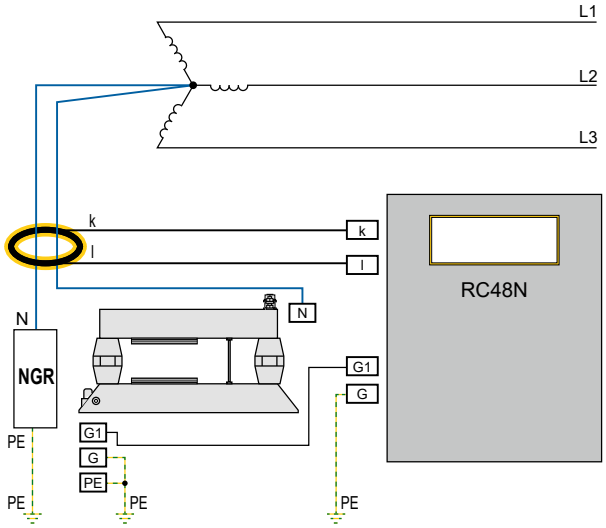

Internal wiring diagram CD5000

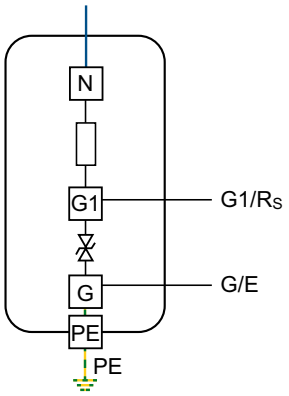

Terminal	Use	Connecting cable	
		Metrical	Imperial
N	Connection to the star point of the HRG system	via cable lug M6 or M10	
G1	Connection to R_S of the NGRM…	1.5 mm²	AWG16
G	Connection to E of the NGRM… (internally connected to PE, see internal wiring diagram)		
PE to enclosure	Connection to the protective conductor (internally connected to E, see internal wiring diagram)	≥ 1.5 mm²	≥ AWG16

CD14400

Coupling device

Device features

- Coupling device for NGRM
- Range of use up to 14400 V system voltage
- Application up to 5000 m
- IP54

Approvals

Typical applications

- The coupling device is suitable for HRG applications up to a system voltage of 14400 V.

Further information

For further information refer to our product range on www.bender.de.

Ordering information

Type	U_{LL}	U_{NGR}	Art. No.
CD14400	up to 14400 V	8400 V	B98039054

Technical data

Insulation coordination DIN EN 50178:1997

Definitions	
Measuring circuit (IC1)	N
Output circuit (IC2)	R_S
Protective circuit (IC3)	E, PE
Rated voltage	8400 V
Overvoltage category	III
Pollution degree	2
Rated insulation voltage	
no galvanic separation between the circuits!	
IC1/(IC2 – IC3)	8400 V
IC2/IC3	50 V

Voltage range

U_n	DC, 50/60 Hz, 10…3200 Hz 8400 V
I_n	84 mA
Operating time	
without ground fault (1900 V)	unlimited
with ground fault (4200 V)	90 seconds
with ground fault (8400 V)	60 seconds
Cool-down period	120 minutes
Overload capacity	1.15 x U_n for < 30 seconds

Resistance

100 kΩ	±0.5 %
Temperature coefficient	20 ppm/K

Environment

Ambient temperature	-40…+70 °C
Ambient temperature for U_L	-40…+60 °C
Humidity	≤ 98 %

Classification of climatic conditions acc. to IEC 60721

(related to temperature and relative humidity)

Stationary use (IEC 60721-3-3)	3K22
Transport (IEC 60721-3-2)	2K11
Long-term storage (IEC 60721-3-1)	1K22

Classification of mechanical conditions acc. to IEC 60721

Stationary use	3M12
Transport	2M4
Long-term storage	1M12

Connection

Connection R_S and E	
Tightening torque	0.5…0.6 Nm (4.4…5.3 lb-in)
Conductor sizes	AWG 24-12
Stripping length	7 mm
Conductor, rigid	0.2…4 mm²
Conductor, flexible	0.2…2.5 mm²
Multiple conductor, flexible with ferrule	
without plastic sleeve	0.25…1.5 mm²
with plastic sleeve	0.25…2.5 mm²
Multiple conductor, flexible with TWIN ferrule	
with plastic sleeve	0.5…1.5 mm²
Connection N and PE	
Tightening torque cable lug M10	17 Nm (150 lb-in)
Tightening torque cable lug M5	2.2 Nm (19.5 lb-in)

Other

Tightening torque	
cover screws	2.5 Nm (22.1 lb-in)
mounting screws	21 Nm (186 lb-in)
Operating mode	in case of a ground fault maximum 60 s
Mounting	any position
Operating altitude	up to 5000 m AMSL
Degree of protection, internal components (DIN EN 60529)	IP54
Flammability class	UL 94V-0
Documentation number	D00346
Weight	< 4.4 kg

Dimension diagram (dimensions in mm)

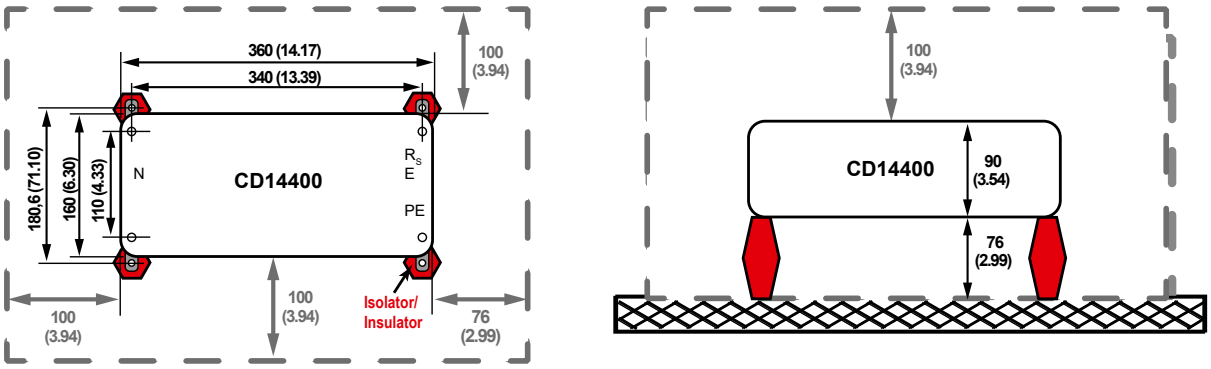

Tightening torque cover screws: 2.5 Nm (22.1 lb-in)

Minimum distance to adjacent devices

Wiring diagram

Wiring diagram

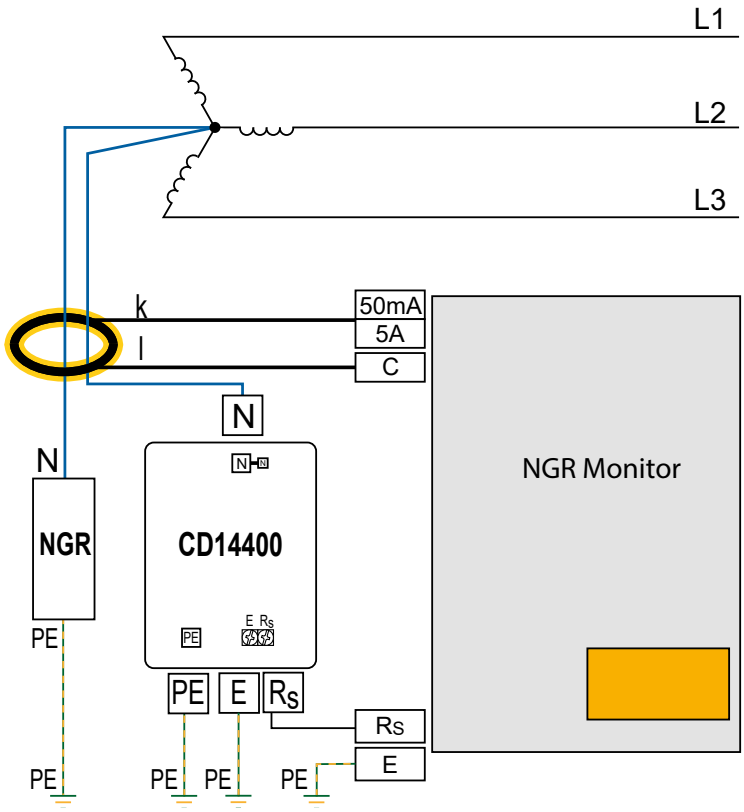

Internal wiring diagram CD14400

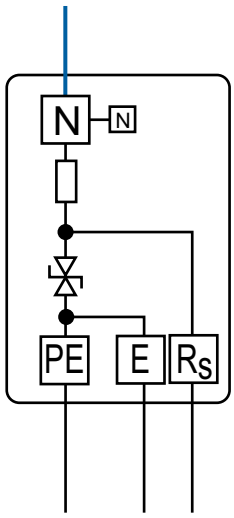

The „N" terminal of the CD14400 should be connected directly to the star point of the transformer, so that the connection between NGR and star point is also monitored.
A direct connection between the „N" connections of the CD14400 and the NGR is not recommended, as in this case a line interruption between the star point and the NGR connection „N" would not be monitored.

Terminal	Use	Connecting cable	
		Metrical	Imperial
R_S	Connection to R_S of the NGRM…	1.5 mm²	AWG16
E	Connection to E of the NGRM…; internally connected to PE		
N	Connection to the star point of the HRG system; via cable lug M5 or M10	≥ 1.5 mm²	AWG16 or greater
PE	Connection to protective earth conductor; internally connected to E, cable lug M5		

CD25000

Coupling device

Typical applications

- The coupling device is suitable for HRG applications up to AC 25 kV and/or DC 14.5 kV

Device features

- Coupling device for NGRM
- Range of use up to AC 25 kV/DC 14.5 kV system voltage
- Application up to 5000 m

Approvals

Further information

For further information refer to our product range on www.bender.de.

Ordering information

Type	U_{LL}	U_{NGR}	Art. No.
CD25000	up to 25000 V	14500 V	B98039055

Technical data

Insulation coordination DIN EN 50178:1997

Definition	
Measuring circuit (IC1)	N
Output circuit (IC2)	R_S
Protective circuit (IC3)	E, PE
Rated voltage	14500 V
Overvoltage category	III
Pollution degree	2
Rated insulation voltage	
no galvanic separation between the circuits!	
IC1/(IC2 – IC3)	14500 V
IC2/IC3	50 V

Voltage range

U_n	DC, 50/60 Hz, 10…3200 Hz 14500 V
I_n	145 mA

Operating time

without ground fault (2800 V)	unlimited
with ground fault (14500 V)	10 seconds
Cool-down period	120 minutes
Overload capacity	1.15 x U_n for < 10 seconds

Resistance

100 kΩ	±0.5 %
Temperature coefficient	20 ppm/K

Environment

Ambient temperature	-40…+70 °C
Ambient temperature for U_L	-40…+60 °C
Humidity	≤ 98 %

Classification of climatic conditions acc. to IEC 60721

(related to temperature and relative humidity)	
Stationary use (IEC 60721-3-3)	3K22
Transport (IEC 60721-3-2)	2K11
Long-term storage (IEC 60721-3-1)	1K22

Classification of mechanical conditions acc. to IEC 60721

Stationary use	3M12
Transport	2M4
Long-term storage	1M12

Connection

Connection R_S and E	
Tightening torque	0.5…0.6 Nm (4.4…5.3 lb-in)
Conductor sizes	AWG 24-12
Stripping length	7 mm
Conductor, rigid	0.2…4 mm²
Conductor, flexible	0.2…2.5 mm²
Multiple conductor, flexible with ferrule	
without plastic sleeve	0.25…1.5 mm²
with ferrule with plastic sleeve	0.25…2.5 mm²
Multiple conductor, flexible with TWIN ferrule	
with plastic sleeve	0.5…1.5 mm²
Connection PE for cable lug	
Tightening torque cable lug M5	2.2 Nm (19.5 lb-in)
Connection N	
Connection via HV line with open end	cable lug provided by the customer

Other

Operating mode	in case of a ground fault maximum 10 s
Mounting	any position
Tightening torque cover screws	2.5 Nm (22.1 lb-in)
Operating altitude (when mounted on insulators)	up to 5000 m AMSL
Degree of protection, internal components (DIN EN 60529)	IP54
Flammability class	UL 94V-0
Documentation number	D00347
Weight	< 11 kg

Dimension diagram (dimensions in mm)

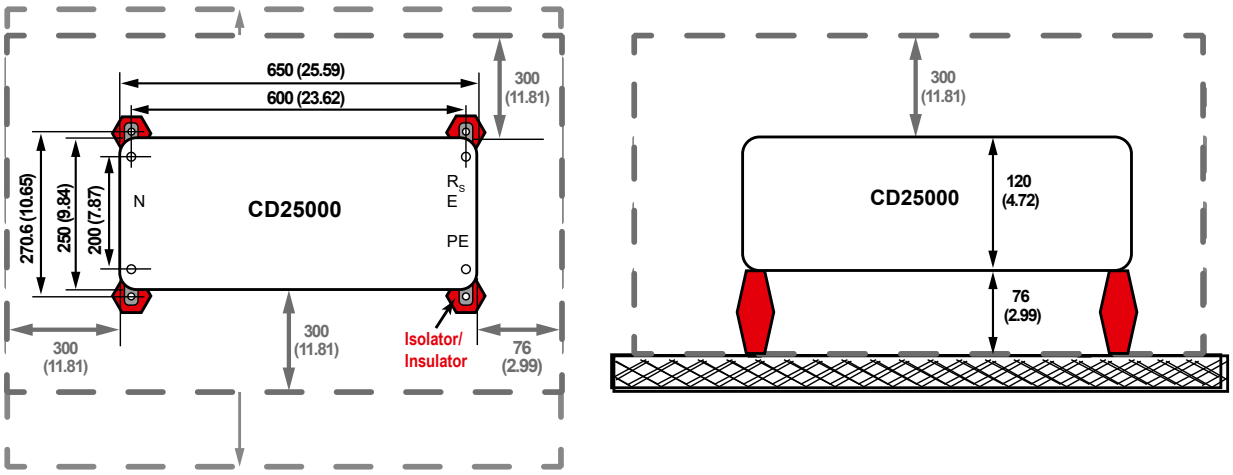

Wiring diagram

Wiring diagram

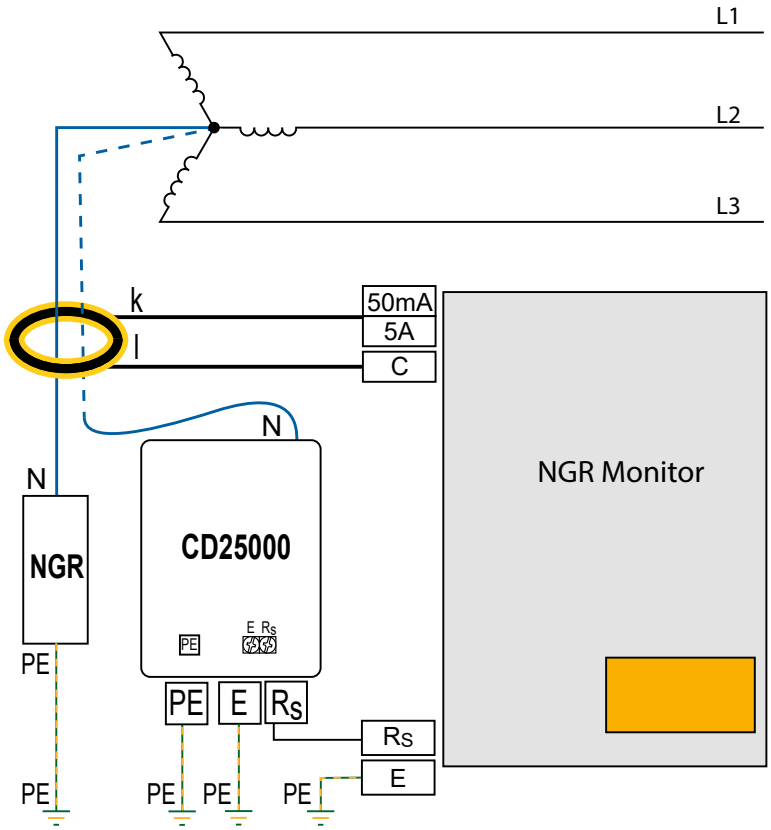

Internal wiring diagram CD25000

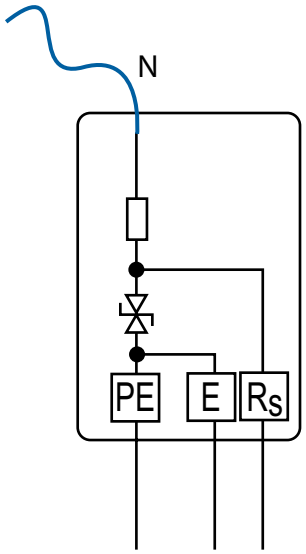

The „N" terminal of the CD25000 should be connected directly to the star point of the transformer, so that the connection between NGR and star point is also monitored.
A direct connection between the „N" connections of the CD25000 and the NGR is not recommended, as in this case a line interruption between the star point and the NGR connection „N" would not be monitored.

Terminal	Use	Connecting cable	
		Metrical	Imperial
N	Connection to the star point of the HRG system: permanently connected cable (1.8 m), cable lug provided by the customer	0.36 mm²	
R_S	Connection to R_S of the NGRM…	1.5 mm²	AWG16
E	Connection to E of the NGRM…; Internally connected to PE	1.5 mm²	AWG16
PE	Connection to the protective conductor, internally connected to E, M5 cable lug	≥ 1.5 mm²	AWG16 or greater

Device overview charge controller

			
		CC613	**ICC1324**
Catalogue page		**254**	**258**
Modem		4G modem (optional)	4G modem (optional)
Integrated patented 6 mA DC fault current detection		✓	✓
Integrated Powerline Communication (PLC)		✓	✓
Emergency Opener		✓	✓
WiFi module		–	✓ (optional)
Integrated power supply unit		–	✓
Interface	**Ethernet**	✓	✓
	Modbus	✓	✓
Variant	**Enclosure for DIN rail mounting**	✓	–
	PCB version	–	✓
Product details (Products on www.bender.de/en)			

Device overview accessories charge controller

		CTBC17	DPM2x16FP	RFID105-L1	RFID114	RFID117-L1
						
Catalogue page		**262**	**266**	**267**	**268**	**269**
Special applications		Measuring current transformer	Display module	RFID module	RFID module	RFID module
For series	**CC613**	✓	✓	✓	✓	✓
	ICC1324	✓	–	–	–	–
	RCMB104	✓	–	–	–	–
	RCD104	✓	–	–	–	–
Product details (Products on www.bender.de/en)						

Charge controller CC613

Charge controller for use in electric vehicle charging stations, wallboxes or street light charging points

Typical applications

- Electric vehicle charging stations, wallboxes or street light charging points

Approvals

Device features

- Charge controller in accordance with IEC 61851-1 (charging mode 3)
- Configurable master and slave operation
  Setting up charging stations with two charging points:
  – 1 charge controller as data gateway with 4G modem
  – 1 charge controller as slave without 4G modem
- Dynamic load management to optimally distribute the available power among all charging points and signal the maximum power available in each case to the vehicle
- Residual direct current monitoring module (external RCD type A required), different cable lengths can be selected
- Integrated emergency opener for actuator control (locking/unlocking) and monitoring of the 12 V supply voltage
- Can be integrated in single- or three-phase systems up to 80 A
- OCPP 1.5 and OCPP 1.6 compliant with JSON, SOAP
- Supported mobile networks: 4G (LTE), 3G (UMTS) and 2G (GSM) with an integrated 4G modem
- 3 USB interfaces:
  – 1 CONFIG interface for local configuration and installation of software updates
  – 2 USB host interfaces
- Control Pilot and Proximity Pilot communication
- Configurable support for additional SCHUKO socket-outlets
- Meter interface: Modbus TCP and RTU
- External Modbus interface (second meter for dynamic load management)
- User interface modules for customer-specific applications (e.g. RFID, LED, antenna)
- Configurable 2-channel input/output extension interface for additional functionality
- Internal temperature sensor to reduce the charging current depending on the ambient temperature
- ISO 15118 Powerline Communication (PLC) for plug & charge and load management systems
- ISO 15118 Powerline Communication (PLC) for plug & charge or autocharge
- Ethernet interface

Standards

The charge controller has been developed in compliance with the following standards:

- EN IEC 63000
- EN IEC 62311
- EN IEC 61851-1
- IEC 61851-21-2
- EN 61851-22
- EN 301 489-1
- EN 301 511
- EN 301 908-1
- EN 301 908-13
- EN 301 908-2
- EN ISO 15118-2
- EN ISO 15118-3
- IEC 62955
- EN 301 489-52 Draft

Patents

EP 2 571 128 / US 9,397,494 / ZL 201210157968.6 / CN 103001175, EP 2 813 856.

Further information

For further information refer to our product range on www.bender.de.

Ordering information

Type	Modem	Interface	RDC-M	External Modbus	OCPP-capable	PLC*	User interface	I/O extension	Art. No.
CC613-ELM4PR-M	4G	Modbus, Ethernet	✓	✓	✓	✓	✓	✓	B94060020
CC613-ELPR-M	–			✓	✓		✓	✓	B94060021
CC613-ELM4PR	4G			–	✓		✓	✓	B94060026
CC613-ELPR	–			–	✓		✓	✓	B94060027
CC613-HEM-X2	–			–	–		–	–	B94060028

* Powerline Communication acc. to ISO/IEC 15118

The charge controller with residual direct current monitoring module (RDC-M) only works in combination with a measuring current transformer (to be ordered separately). Different cable lengths are available.

Accessory

Description	Art. No.	Page
RFID105-L1 with RJ45 cable (length 500 mm)	B94060105	**271**
RFID114 with RJ45 cable (length 500 mm)	B94060114	**272**
Current transformer CTBC17 (cable variant, cable length 325 mm)[1)]	B98080071	**266**
Current transformer CTBC17 (PCB variant)[1), 2)]	B98080070	**266**
Connection cable CTBC17-Cable… incl. clip housing	B980805…	**266**
DPM2x16FP (display module)	B94060120	**270**

[1)] Internal diameter: 17 mm
[2)] The PCB-variant can be combined with the connection cables of different lengths

Plug kit	Content / Quantity	Art. No.
Plug kit (can be ordered separately)	3-pole (1 x), 4-pole (1 x), 8-pole (2 x)	B94060129
Plug kit bulk pack, ELM4PR-M, ELPR-M	3-pole (50 x), 4-pole (50 x), 8-pole (100 x)	B94060128
Plug kit bulk pack, ELM4PR, ELPR, HEM-X2	4-pole (50 x), 8-pole (100 x)	B94060126

Technical data

Insulation coordination acc. to IEC 60664-1/IEC 60664-3

Rated voltage	250 V
Pollution degree	2
Overvoltage category within terminal H	II
Overvoltage category, terminal H and all other terminals	III
Rated impulse voltage, terminal H and all other terminals	6 kV
Rated impulse voltage within terminal H	2.5 kV
Double insulation between terminal H and all other terminals	OCV III
Basic insulation within terminal H	OCV II
Operating altitude AMSL	≤ 2000 m

Supply voltage (terminal B (0CV, +12CV))

Nominal voltage	DC 12 V
Operating range of the nominal voltage	DC 11.4…12.6 V
Max. nominal current	750 mA
Max. nominal current without USB load	400 mA
Max. nominal current with USB load	750 mA

Residual direct current monitoring module* (RDC-M, terminal A)

Measuring range	100 mA
Response values:	
Residual current $I_{\Delta n}$	DC 6 mA
Response tolerance $I_{\Delta n}$	-50…0 %
Measuring current transformers	
Max. connection cable length	≤ 1.47 m
Restart sequence value:	
DC 6 mA	< 3 mA

* Patented 6 mA DC residual current trip
(Patent: EP 2 571 128/US 9,397,494/ZL 201210157968.6/CN 103001175, EP 2 813 856)

SMA plug connector* for 4G antenna (optionally with 4G modem, terminal E)

Frequency bands	800 MHz/850 MHz/900 MHz/1800 MHz/2100 MHz/2600 MHz
Impedance	50 Ω
Data rate	**GSM:**
	GPRS: UL 85.6 kBit/s; DL 107 kBit/s
	EDGE: UL 236.8 kBit/s; DL 296 kBit/s
	UMTS:
	WCDMA: UL 384 kBit/s; DL 384 kBit/s
	DC-HSDPA: DL 42 MBit/s
	HSUPA: UL 5.76 MBit/s
	LTE:
	LTE FDD: UL 5 MBit/s; DL 10 MBit/s
	LTE TDD: UL 3.1 MBit/s; DL 8.96 MBit/s
Specified antenna	PSI-GSM/UMTS-QB-ANT

* SMA plug connector must be safeguarded against ESD discharges by the customer

Data interfaces

USB host 1 (terminal C1)*	USB port type A; USB 2.0 max. 250 mA
USB host 2 (terminal C2)*	USB port type A; USB 2.0 max. 250 mA
Ethernet (terminal D)	10/100 Mbit
CONFIG (configuration interface, terminal F)	micro USB port type AB
SIM card (only with 4G modem, front panel)	micro SIM
HMI (user interface, terminal K)	internal
Modbus meter (terminal B)	9.6 kBit
External Modbus (terminal I)	9.6 kBit
Control Pilot (terminal B (CP))	acc. to IEC 61851
Proximity Pilot (terminal B (PP))	acc. to IEC 61851

* USB host 1 and USB host 2: in total 500 mA

Inputs (depending on the variant)

Optocoupler (terminal J (Opto 1 In+, Opto 1 In-))

Input voltage	DC 11.4 V…25.2 V
Input current	2.3…6.4 mA

Weld check (terminal H (WB, WA))

Input voltage	AC 180…277 V
Input current	0.6…1.3 mA

Input PE (terminal B (PE, PE))

Outputs (depending on the variant)

Contact data acc. to IEC 60947-5-1:

Relays (12 V) (terminal J (relay 13, relay 14))

Rated operational voltage U_e	DC 24 V
Rated operational current I_e	DC 1 A
Minimum contact rating	DC 1 mA at ≥ 10 V

Switching contact for contactor (terminal H (relay 23, relay 24))

Rated operational voltage U_e	AC 230 V
Rated operational current I_e	AC 4 A
Minimum contact rating	AC 50 mA at ≥ 10 V

Environment/EMC

EMC	see CE declaration
Operating temperature	-30…70 °C

Classification of climatic conditions acc. to IEC 60721:

Stationary use (IEC 60721-3-3)	3K23 (except condensation and formation of ice)
Transport (IEC 60721-3-2)	2K11
Long-term storage (IEC 60721-3-1)	1K21
Classification of mechanical conditions acc. to IEC 60721:	
Stationary use (IEC 60721-3-3)	3M11
Transport (IEC 60721-3-2)	2M4
Long-term storage (IEC 60721-3-1)	1M12

Cable lengths/cable types	
Cable	Shielded, one end of shield connected to PE
HMI (user interface, terminal K) (depending on the variant)	
Connection cable RJ45, shielded	
Max. connection cable length	internal 2 m
Ethernet (terminal D)	
Connection cable	CAT 6
Max. connection cable length	100 m
Connection type (terminal blocks B and J)	**push-wire terminal**
Connection specifications:	
Rigid/flexible	0.2…1.5 mm² (AWG 24-16)
Flexible with ferrule without plastic sleeve	0.25…1.5 mm² (AWG 24-16)
Flexible with ferrule with plastic sleeve	0.14…0.75 mm² (AWG 26-18)
Stripping length	10 mm
Max. connection cable length	2 m
Cross-section	≥ 0.5 mm²
Max. connection cable length (PE)	4 m
Cross-section (PE)	≥ 1 mm²

Connection type (terminal blocks I) push-wire terminal	
Connection specifications:	
Rigid/flexible	0.2…1.5 mm² (AWG 24-16)
Flexible with ferrule without plastic sleeve	0.25…1.5 mm² (AWG 24-16)
Flexible with ferrule with plastic sleeve	0.14…0.75 mm² (AWG 26-18)
Stripping length	10 mm
Max. connection cable length	2 m
Cross-section	≥ 0.5 mm²
Max. connection cable length (PE)	4 m
Cross-section (PE)	≥ 1 mm²

Other	
Operating mode	Continuous operation
Mounting position	Orientated to front panel; air must pass through cooling slots vertically
Degree of protection	IP20
DIN rail	IEC 60715
Documentation number	D00381
Weight (depends on the variant)	max. 500 g

Dimension diagram

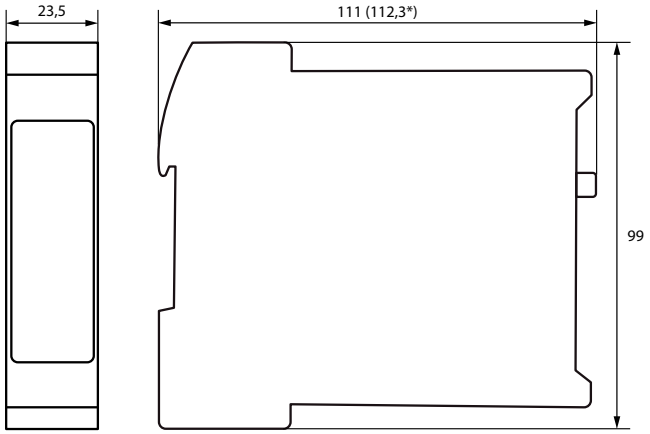

Dimensions in mm acc. to ISO 2768 - m

** Dimensions with antenna socket*

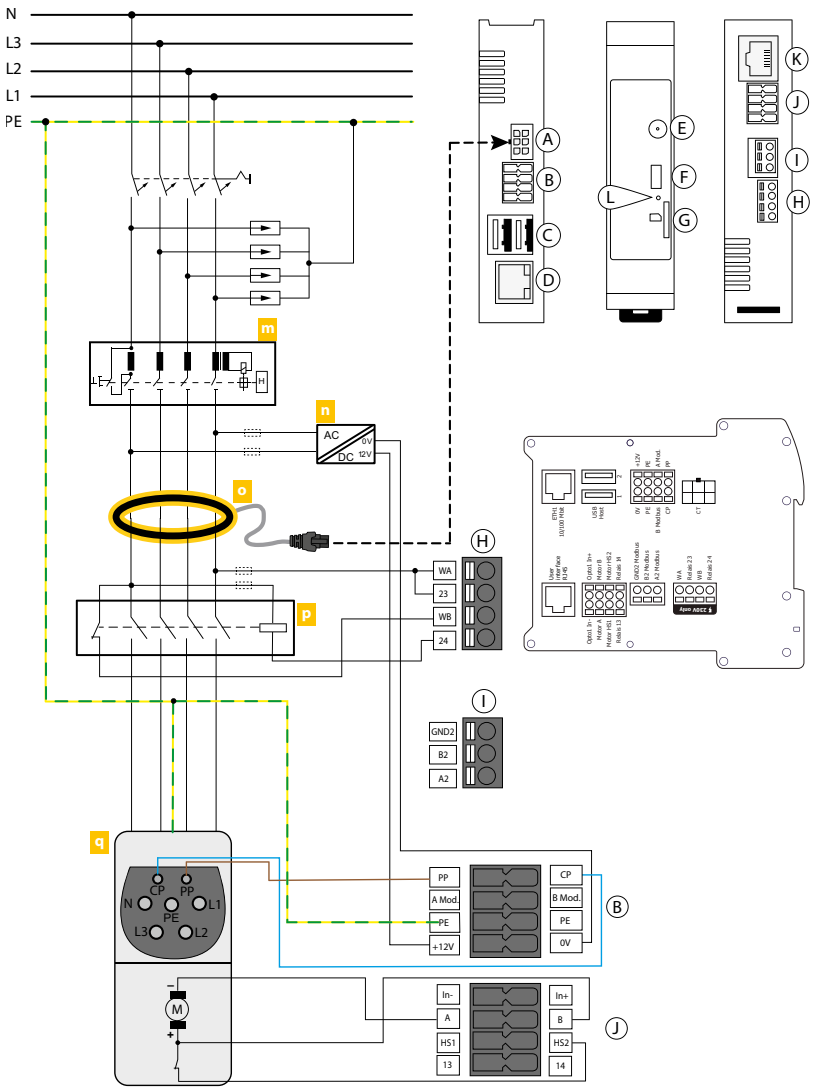

Ⓐ Connection measuring current transformer (CT)
Ⓑ 12 V supply, PE, Modbus meter, CP, PP
Ⓒ 2x USB type A (1, 2)
Ⓓ Connection Ethernet (ETH1)
Ⓔ Antenna socket 4G (only available for variants with 4G modem[1])
Ⓕ Configuration interface
Ⓖ Micro SIM card slot (only available for variants with 4G modem[1])
Ⓗ Weld check, relay for contactor control rated for 230 V/4 A
Ⓘ External Modbus (galvanic separation)
Ⓙ Locking, control relay GPIO, optocoupler input
Ⓚ Connection user interface (HMI) (not available with HEM-X2 variant)
Ⓛ STATUS LED
m RCD type A
n Voltage supply DC 12 V
o Measuring current transformer (CT) with plug
p Contactor
q Type 2 socket-outlet

[1] Data gateways with 4G modem: CC613-ELM4PR-M and CC613-ELM4PR

Terminal assignment

B	0V	Input 0 V
	+ 12 V	Supply voltage +12 V
	PE	Input PE
	PE	Input PE
	B Mod.	Modbus meter B
	A Mod.	Modbus meter A
	CP	Control Pilot
	PP	Proximity Pilot

H	WA	Weld check input L1
	23	Relais 23: Switching contact contactor
	WB	Weld check input N
	24	Relais 24: Switching contact contactor

I	GND2	External Modbus GND (shield connected on one side)
	B2	External Modbus B (galvanic separation)
	A2	External Modbus A (galvanic separation)

J	In-	Opto 1 In-: Optocoupler input 12 V negative
	In+	Opto 1 In-: Optocoupler input 12 V positive
	A	Actuator A: Locking actuator output negative
	B	Actuator B: Locking actuator output positive
	HS2	Actuator HS2: Locking input actuator switch
	HS1	Actuator HS1: Locking 12 V output actuator switch
	14	Relay 14: Relay contacts GPIO (12 V)
	13	Relay 13: Relay contacts GPIO (12 V)

ADVICE
CAUTION! Switching contact contactor and weld check at terminal H are only suitable for mains voltage (230 V)! Not permitted for SELV/PELV voltages.

ICC1324 charge controller

Charge controller for charging systems for electric vehicle charging

Image similar

Typical applications

- AC charging stations for electric vehicles, wallboxes

Approvals

CE UKCA

Device features

- Charge controller in accordance with IEC 61851-1 (mode 3 charging)
- Master and slave operation configurable
  – Setting up charging ssystems with two charging points: 1 charge controller as data gateway with 4G modem and 1 charge controller as slave without 4G modem
- Dynamic load management to optimally distribute the available power among all charging points and signal the maximum power to the vehicle
- Patented residual direct current monitoring module (external RCD type A required), different cable lengths can be selected
- Integrated emergency opener for actuator control (locking/unlocking)
- Can be integrated in single- or three-phase systems up to 3x 32 A
- OCPP 1.5 and OCPP 1.6 compliant with JSON, SOAP
- Integrated 4G modem
- 3 USB interfaces:
  – 1 CONFIG interface (type B) for local configuration and installation of software updates
  – 2 USB host interfaces (type A)
- Control Pilot and Proximity Pilot communication (acc. to IEC 61851-1)
- Additional SCHUKO socket-outlet control
- Meter interface: Modbus TCP and RTU
- External Modbus interface for remote control via energy management systems
- Additional inputs and outputs for extended control of the charge controller
- Internal temperature sensor to reduce the charging current depending on the ambient temperature
- ISO 15118 Powerline Communication (PLC) for plug & charge, autocharge and load management systems
- Integrated WiFi module and two Ethernet interfaces
- Integrated DC 15 V voltage source for customer-specific applications
- Supply voltage AC 230 V

Standards

The charge controller has been developed in compliance with the following standards:

- EN 61851-22
- EN IEC 61439-1
- EN IEC 61439-7
- EN IEC 61851-1
- EN IEC 61851-21-2
- EN IEC 62311
- EN IEC 63000
- EN ISO 15118-2
- EN ISO 15118-3
- EN 300 328
- EN 301 489-1
- EN 301 489-17
- EN 301 489-52
- EN 301 511
- EN 301 908-1
- EN 301 908-13
- EN 301 908-2
- IEC 62955

Patents

EP 2 571 128 / US 9,397,494 / ZL 201210157968.6 / CN 103001175, EP 2 813 856.

Further information

For further information refer to our product range on www.bender.de.

Ordering information

Type	4G modem	WiFi	PLC [1]	Insulated input	12 V relay output	Interface	Art. No.
ICC1324-Connect Plus	✓ (Cat 1)	✓	✓	2x	2x	USB, Modbus meter, Ethernet, RFID	B94060080
ICC1324-Connect	✓ (Cat M1/NB1)	–	✓	1x	–		B94060079
ICC1324-Connect SP	–	✓	✓	1x	1x		B94060074
ICC1324-Home Plus	–	✓	✓	1x	–		B94060078
ICC1324-Home	–	–	–	1x	–	USB	B94060077

[1] Powerline Communication acc. ISO/IEC 15118

The charge controller with residual direct current monitoring module (RDC-M) only works in combination with the measuring current transformer (to be ordered separately). Different cable lengths are available.

Accessory

Description	Art. No.	Page
HMI150	B94060150	–
HMI145	B94060151	–
HMI140	B94060152	–
Current transformer CTBC17 (cable variant, cable length 325 mm)[1]	B98080071	**268**
Current transformer CTBC17 (PCB variant)[1), 2)]	B98080070	**268**
Connection cable CTBC17-Cable… incl. clip housing	B980805…	**268**

[1] Internal diameter: 17 mm

[2] The PCB-variant can be combined with the connection cables of different lengths

Plug kit	Content / Quantity	Art. No.
Plug kit (can be ordered separately)	2-pole (1 x), 4-pole (1 x), 8-pole (3 x)	B94060125
Plug kit bulk pack Connect Plus, Connect, Home Plus	2-pole (50 x), 4-pole (50 x), 8-pole (150 x)	B94060124
Plug kit bulk pack Home	2-pole (50 x), 4-pole (50 x), 8-pole (100 x)	B94060123

Technical data

Insulation coordination acc. to IEC 60664-1/IEC 60664-3

Rated voltage / Pollution degree	250 V / 2
Overvoltage category	II (within terminal M)
Overvoltage category	III (terminal M and all other terminals)
Rated impulse voltage	6 kV (terminal M and all other terminals)
Rated impulse voltage	2.5 kV (within terminal M)
Double insulation acc. to OVC III between	terminal M and all other terminals
Basic insulation acc. to OVC II	within terminal M
Operating altitude	≤ 2000 m AMSL

Supply voltage AC 230 V (terminal N (L1, N))

Supply voltage range U_s	184… 264 V
Frequency of U_s	50 Hz
maximum Power consumption	12 W
average Power consumption	6 W
External circuit breaker recommended	B6A

Residual direct current monitoring module* (RDC-M, terminal J)

Measuring range	100 mA
Response values:	
Residual current I_{dc}	DC 6 mA
Response tolerance I_{dc}	-50…0 %
Measuring current transformer:	
Max. Length of the connection cable	≤1,47 m
Restart sequence value:	
DC 6 mA	< 3 mA

* patented 6 mA DC fault current tripping
(Patents: EP 2 571 128 / US 9,397,494 / ZL 201210157968.6 / CN 103001175, EP 2 813 856)

SMA connector for 4G antenna (for ICC1324-Connect Plus variant only, terminal G)

Modem LTE Cat 1 & GSM

Frequency bands	800 MHz/850 MHz/900 MHz/1800 MHz/2100 MHz/2600 MHz LTE-FDD: B1/B3/B7/B8/B20/B28; WCDMA: B1/B8; GSM: B3/B8
Impedance	50 Ω
Data rate	GSM: GPRS: UL 85.6 kBit/s; DL 107 kBit/s EDGE: UL 236.8 kBit/s; DL 296 kBit/s UMTS: WCDMA: UL 384 kBit/s; DL 384 kBit/s DC-HSDPA: DL 42 MBit/s HSUPA: UL 5.76 MBit/s LTE: LTE FDD: UL 5 MBit/s; DL 10 MBit/s LTE TDD: UL 3.1 MBit/s; DL 8.96 MBit/s
Recommended antenna	TC ANT MOBILE WALL 0.5M - 2702274
Max. length of the antenna cable	< 3 m
Max. output power	GSM850/EGSM900: 33dBm DCS1800/PCS1900: 30dBm WDMA: 24dBm LTE: 23dBm

SMA connector for LTE-M1 antenna & LTM-NB1/2 antenna (for ICC1324-Connect variant only, terminal G)

Modem LTE CAT M1/NB1 & GSM

Frequency bands	Cat M1/Cat NB1: LTE FDD: B1/B2/B3/B4/B5/B8/B12/B13/B18/ B19/B20/B25/B26*/B28 LTE TDD: B39 (For Cat M1 Only)
Impedance	50 Ω
Data rate	GSM: 850/900/1800/1900MHz GPRS: UL 85,6 kBit/s; DL 107 kBit/s GSM: UL 236,8 kBit/s; DL 296 kBit/ LTE-M1: Max. 375Kbps (DL), max. 375Kbps (UL) LTE-NB: Max. 32Kbps (DL), max. 70Kbps (UL)
Recommended antenna	TC ANT MOBILE WALL 0.5M - 2702274
Max. length of the antenna cable	< 3 m
Max. output power	GSM850/EGSM900: 33dBm DCS1800/PCS1900: 30dBm LTE: 23dBm

WiFi

Standards	IEEE 802.11b/g/n
Frequency bands	2.4 GHz Kanäle 1-13 (2.412 GHz - 2.472)
Channel band width	20 MHz
Data rate	802.11b1, 2, 5.5 and 11 Mbps 802.11g 6, 9, 12, 18, 24, 36, 48 and 54 Mbps 802.11n MCS0-MCS7 (max 72.2Mbps)
max. output power:	19 dBm EIR

LED indications

Service	blue: system is starting green: system started, not ready for operation yet flashing green: system running, system ready for operation red: system error
Ethernet (terminals B, C)	off: no Ethernet connection steady green: active Ethernet connection flashing green: data exchange steady yellow: transmission rate 100 Mbit/s yellow off: transmission rate 10 Mbit/s

Data interface

USB host 1 (terminal D1)	USB port type A; USB 2.0 max. 250 mA
USB host 2 (terminal D2)	USB port type A; USB 2.0 max. 250 mA
Ethernet (terminal B, C)	10/100 Mbit
CONFIG (configuration interface, terminal H)	USB port type B
SIM card (only with 4G modem, terminal E)	micro SIM
Modbus meter (terminal A)	9.6 kBit
Control Pilot (terminal A (CP))	acc. to IEC 61851
Proximity Pilot (terminal A (PP))	acc. to IEC 61851

Inputs

Optocoupler 1 (terminal L (Opto 1 In+, Opto 1 In-))	
Input voltage (HIGH)	DC 11.4…25.2 V
Input voltage (LOW)	DC 0 V
Input current	2.3…6.4 mA
Optocoupler 2 (terminal L (Opto 2 In+, Opto 2 In-))	
Input voltage (HIGH)	DC 11.4…25.2 V
Input voltage (LOW)	DC 0 V
Input current	2.3…6.4 mA
Potential difference to PE/GND	max. 100 V*
Weld check (terminal M (WB, WA))	
Input voltage	AC 184…264 V
Input current	0.6…1.3 mA
Potential difference to PE/GND	max. 100 V*

* The potential difference between the optocoupler inputs and other inputs/outputs must be less than 100 V.

Input PE (terminal A (PE, PE))

Outputs

Contact data acc. to IEC 60947-5-1:

DC 15 V voltage source (terminal A (15 V, 0 V))	
Output voltage	DC 15 V
maximum load capacity	0,4 A / 4,8 VA
Tolerance	DC ± 0,75 V
Relay 1 (12 V) (terminal K (relay 13, relay 14))	
Rated operational voltage U_e	DC 24 V
Rated operational current I_e	DC 1 A
Minimum contact rating	1 mA at ≥ 10 V
Relay 2 (12 V) (terminal K (relay 23, relay 24))	
Rated operational voltage U_e	DC 24 V
Rated operational current I_e	DC 1 A
Minimum contact rating	1 mA at ≥ 10 V
Switching contact for contactor (terminal M (relay 33, relay 34))	
Rated operational voltage U_e	AC 230 V
Rated operational current I_e	AC 4 A
Minimum contact rating	50 mA at ≥ 10 V (AC)

Environment/EMC

EMC	see CE declaration
Operating temperature	-25…+65 °C

Classification of climatic conditions acc. to IEC 60721:

Stationary use (IEC 60721-3-3)	3K23 (except condensation and formation of ice)
Transport (IEC 60721-3-2)	2K11
Long-term storage (IEC 60721-3-1)	1K21

Classification of mechanical conditions acc. to IEC 60721:

Stationary use (IEC 60721-3-3)	3M11
Transport (IEC 60721-3-2)	2M4
Long-term storage (IEC 60721-3-1)	1M12

Cable lengths/cable types

Ethernet (terminals B, C)	
Cable	shielded on one side, shield on charge controller side to PE
Connection cable	CAT 6
Max. connection cable length	100 m
Connection type (terminal blocks A, K and L)	**push-wire terminal**
Connection specifications:	
rigid /flexible	0.2…1.5 mm² (AWG 24-16)
flexible with ferrule without plastic sleeve	0.25…1.5 mm² (AWG 24-16)
flexible with ferrule with plastic sleeve	0.14… 0.75 mm² (AWG 26-18)
Stripping length	10 mm
Max. connection cable length	< 3 m
Cable (Modbus)	shielded and twisted in pairs, shield on both sides to PE
Max. connection cable length (Modbus)	250 m
Cross section (Modbus)	≥ 0.5 mm²
Max. connection cable length (PE)	< 3 m
Cross-section (PE)	≥ 1 mm²
Connection type (terminal block M)	**push-wire terminal**
Connection specifications:	
rigid /flexible	0.75…2.5 mm² (AWG 24-16)
flexible with ferrule without plastic sleeve	0.75…2.5 mm² (AWG 24-16)
flexible with ferrule with plastic sleeve	0.75…2.5 mm² (AWG 24-18)
Stripping length	10 mm
Max. connection cable length	< 3 m
Connection type (terminal block N)	**push-wire terminal**
Connection specifications:	
rigid /flexible	0.2…2.5 mm² (AWG 24-12)
flexible with ferrule without plastic sleeve	0.25…2.5 mm² (AWG 24-12)
flexible with ferrule with plastic sleeve	0.25…2.5 mm² (AWG 24-12)
Stripping length	10 mm

Other

Operating mode	continuous operation
Mounting position	standing
Degree of protection	IP20
Documentation number	D00436
Weight	max. 500 g (depends on variant)

Dimension diagram (dimensions in mm)

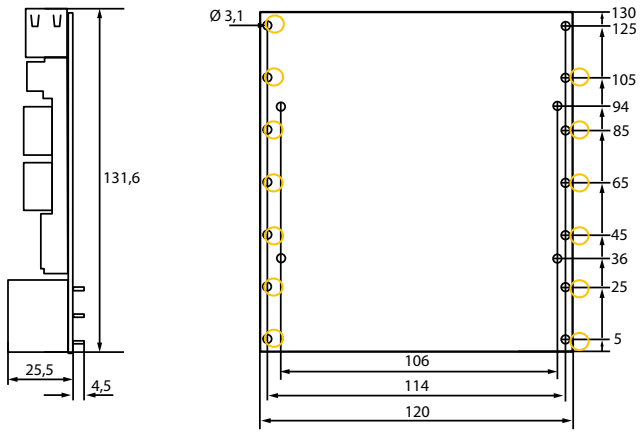

Red marks: Possible fastening points

Fastening recommendation:
Fillister head screws: 4 x M 2.5
Torque specification: 0.36 Nm

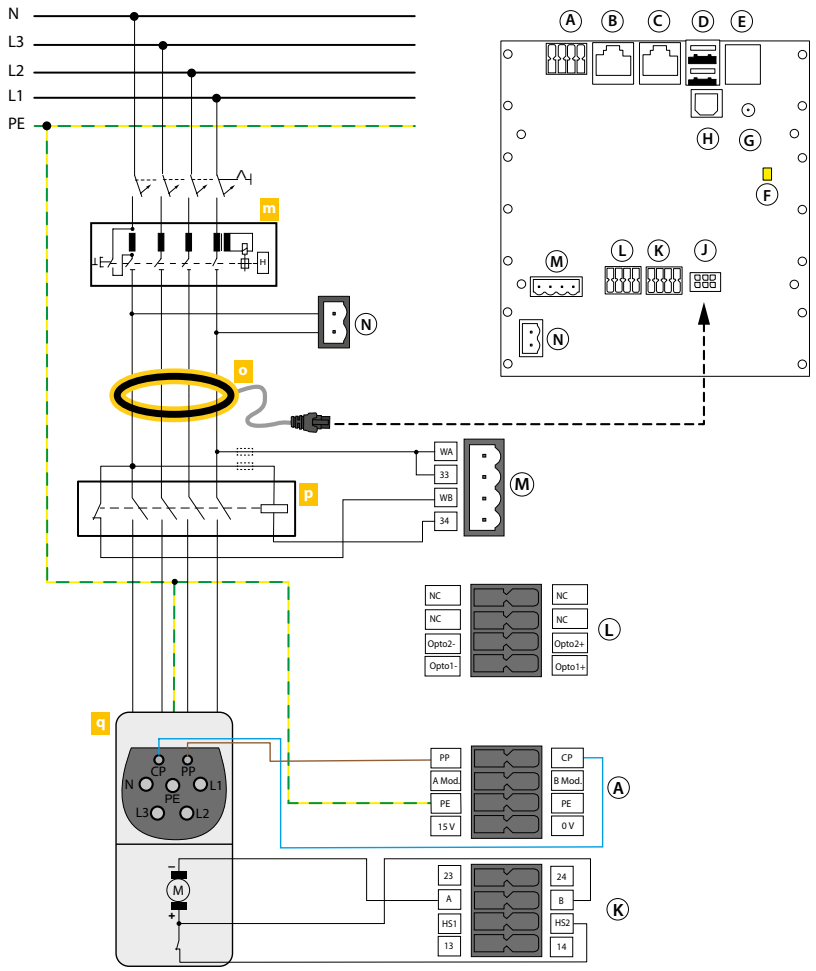

Ⓐ PE, Modbus meter, CP, PP
Ⓑ Connection Ethernet (ETH2)
Ⓒ Connection Ethernet (ETH1)
Ⓓ 2x USB type A (1, 2)
Ⓔ Micro SIM card slot (only available for variants with 4G modem)[1]
Ⓕ LED service
Ⓖ Antenna socket 4G (only available for variants with 4G modem[1])
Ⓗ Configuration interface USB type B
Ⓙ Connection measuring current transformer (CT)
Ⓚ Locking, control relay GPIO
Ⓛ Optocoupler input
Ⓜ Weld check, relay for contactor control rated for 230 V/4 A
Ⓝ Power supply AC 230 V
m RCD type A
o Measuring current transformer (CT) with plug
p Contactor
q Type 2 socket-outlet

[1] *Data gateways with 4G modem: ICC1324-Connect Plus and ICC1324-Connect*

Terminal assignment

A	0 V	DC 15 V voltage source for customer-specific application
	15 V	
	PE	Input PE
	PE	Input PE
	B Mod.	Modbus meter B
	A Mod.	Modbus meter A
	CP	Control Pilot
	PP	Proximity Pilot

M	WA	Weld check input L1
	33	Relay 33: Switching contact contactor
	WB	Weld check input N
	34	Relay 34: Switching contact contactor

K	23	Relay 23: Relay contacts GPIO (12 V)
	24	Relay 24: Relay contacts GPIO (12 V)
	A	Actuator A: Locking actuator output negative
	B	Actuator B: Locking actuator output positive
	HS2	Actuator HS2: Locking input actuator switch
	HS1	Actuator HS1: Locking 12 V output actuator switch
	14	Relay 14: Relay contacts GPIO (12 V)
	13	Relay 13: Relay contacts GPIO (12 V)

L	Opto1-	Optocoupler input 1 12 V negative
	Opto1+	Optocoupler input 1 12 V positive
	Opto2-	Optocoupler input 2 12 V negative
	Opto2+	Optocoupler input 2 12 V positive

N	N	Neutral conductor
	L1	230 V supply (phase 1)

The 230 V supply (terminal N), the weld check input (terminal M, WA) and the switching contact contactor (terminal M, 33) must be connected to the same phase (L1) to ensure protection against overvoltage!

CTBC17 series

AC/DC sensitive measuring current transformers

Typical applications

- Electric vehicle charging stations, wallboxes or street light charging points

Approvals

(conformity for cable variant only)

UL File E173157

Device features

- Suitable for AC/DC sensitive residual current measurement according to IEC 62752 and IEC 60755
- Suitable for DC fault current monitoring to protect type A RCDs in conjunction with the listed evaluators
- Shield to prevent interferences caused by high load currents and external magnetic fields
- PCB mounting
- Connection cable for direct mounting available
- Can be used in applications according to
  - IEC 62020
  - IEC 62752
  - IEC 61851-1
  - IEC 62955
  - UL2231

Further information

For further information refer to our product range on www.bender.de.

Ordering information

Sensor	Version	Art. No.
CTBC17P-03	PCB mounting	B98080070
CTBC17P-04		B98080074
CTBC17P-03-K0325	Cable variant (length 325 ±25 mm)	B98080071

Cable incl. clip enclosure	Connector length (mm)	Art. No.
CTBC17 cabel1470	1470 ±30	B98080542
CTBC17 cabel600	600 ±25	B98080543
CTBC17 cabel325	325 ±25	B98080541
CTBC17 cabel180	180 ±25	B98080540

Accessories

Description	Recommended mounting screws
Mounting screws M3	2 x Würth-WüPlast 2.5 x 8 mm

Suitable system components

CTBC17P-03

Description	Cable	PCB	Type	Art. No.	Page
Charge controller	✓	–	CC613	B940600…	**254**
	✓	–	ICC1324	B940600…	**258**
Residual current monitoring modules	✓ [1]	✓	RCMB104	B940424…	**213**
	✓ [1]	✓	RDC104	B94042483	**216**

[1] Molex adapter connector required by customer

CTBC17P-04[2]

Description	Cable	PCB
Residual current monitoring modules	✓ [1]	✓

[1] Molex adapter connector required by customer

[2] Various residual current monitoring modules for charge controllers in combination with the CTBC17P-04 are available on request.

Insulation coordination according to IEC 60664-1	
Definitions	
CT cable feed-through opening on primary side	(IC1)
Measuring circuit; CT on secondary side	(IC2)
Connection cable measuring circuit	(IC3)
Operating altitude	
Basic insulation	≤ 4000 m AMSL
Double insulation	≤ 2000 m AMSL
Rated voltage	600 V
Overvoltage category	III
Rated impulse voltage	
IC1/IC2	8 kV
IC3	4 kV
Rated insulation voltage	
IC1/IC2	600 V
IC3	300 V
Pollution degree	2
Safe separation (double insulation) between	
IC1/IC2	OVC III/600 V
Insulation coordination according to IEC 62955	
IC1/IC2	8 mm/400 V

Measuring current transformer circuit	
Diameter cable feed-through opening	17 mm
Rated load current	80 A
Rated primary residual current	1000 mA
Rated DC residual operating current $I_{\Delta dc}$ acc. to IEC 62955	6 mA
Rated continuous thermal current I_{cth}	80 A
Rated short-time thermal current I_{th}	2400 A
Rated dynamic current I_{dyn}	6000 A

Environment	
Operating temperature with cable	-30…+80 °C
Operating temperature sensor	-35…+85 °C
Temperature in the cable feed-through opening	max. 100 °C

Environment (UL applications)	
Operating temperature with cable	-30…+75 °C
Operating temperature sensor	-35…+85 °C
Temperature in the cable feed-through opening	max. 100 °C

Classification of climatic conditions acc. to IEC 60721	
Stationary use (IEC 60721-3-3)	3K22
Transport (IEC 60721-3-2)	2K11
Long-term storage (IEC 60721-3-1)	1K22

Classification of mechanical conditions acc. to IEC 60721	
Stationary use (IEC 60721-3-3)	3M12
Transport (IEC 60721-3-2)	2M4
Long-term storage (IEC 60721-3-1)	1M12

PCB mounting (CTBC17P-03, CTBC17P-04)	
Fastening	solderable fixing pins
Pin length from top edge of PCB	3.9 ±0.3 mm
Connection windings	solderable contact pins
Pin length from top edge of PCB	min. 3 mm
Enclosure retaining pin pull-out forces	50N/PIN
Soldering profile	260 °C for 10 s
Recommended PCB thickness	1.6…2.4 mm

Connection	
Tightening torque mounting screw	0.5 Nm
Drilling diameter	3 mm
Connection cable with plug connector	6 poles
Cable length	see ordering information

Suitable PCB connector	
Molex Micro Fit 3.0 Header	Art No. 43045-0607
Connection cable	UL Style 2464
External diameter of the cable (Da)	typ. 5.4 mm

Bending radius of the connection cable	
Once	8 x Da
Several times	15 x Da

Other	
Degree of protection (DIN EN 60529)	IP40
Degree of protection, connection (DIN EN 60529)	IP30
Fastening cable connection variant	cable ties
Enclosure sensor	black
Flammability class according to	UL94V-0
Weight	
CTBC17 cable1470	< 75 g
CTBC17 cable600	< 40 g
CTBC17 cable325	< 30 g
CTBC17 cable180	< 25 g
CTBC17P-03	< 40 g
CTBC17P-03-K0325	< 70 g
CTBC17P-04	< 40 g

Dimension diagram (dimensions in mm)

Cable variant

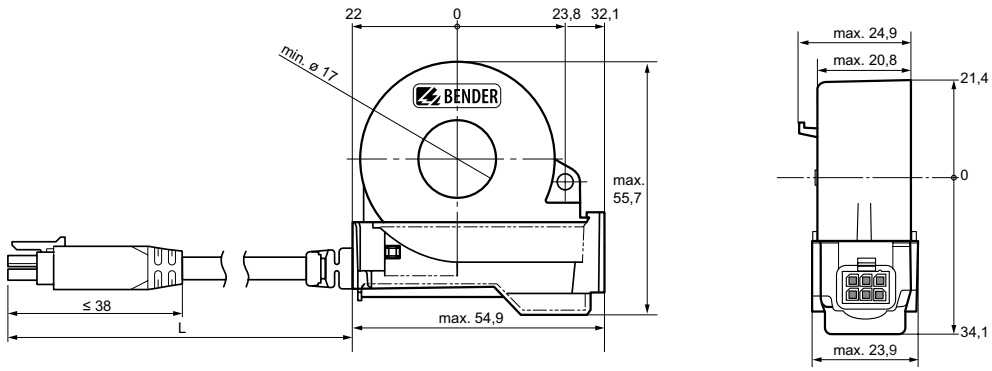

Dimension diagram (dimensions in mm)

PCB variant

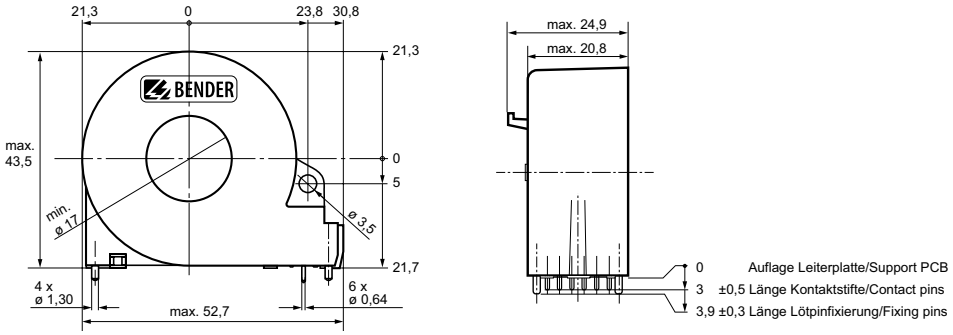

Wiring diagram – PCB variant

CTBC17 with RCMB104 evaluato

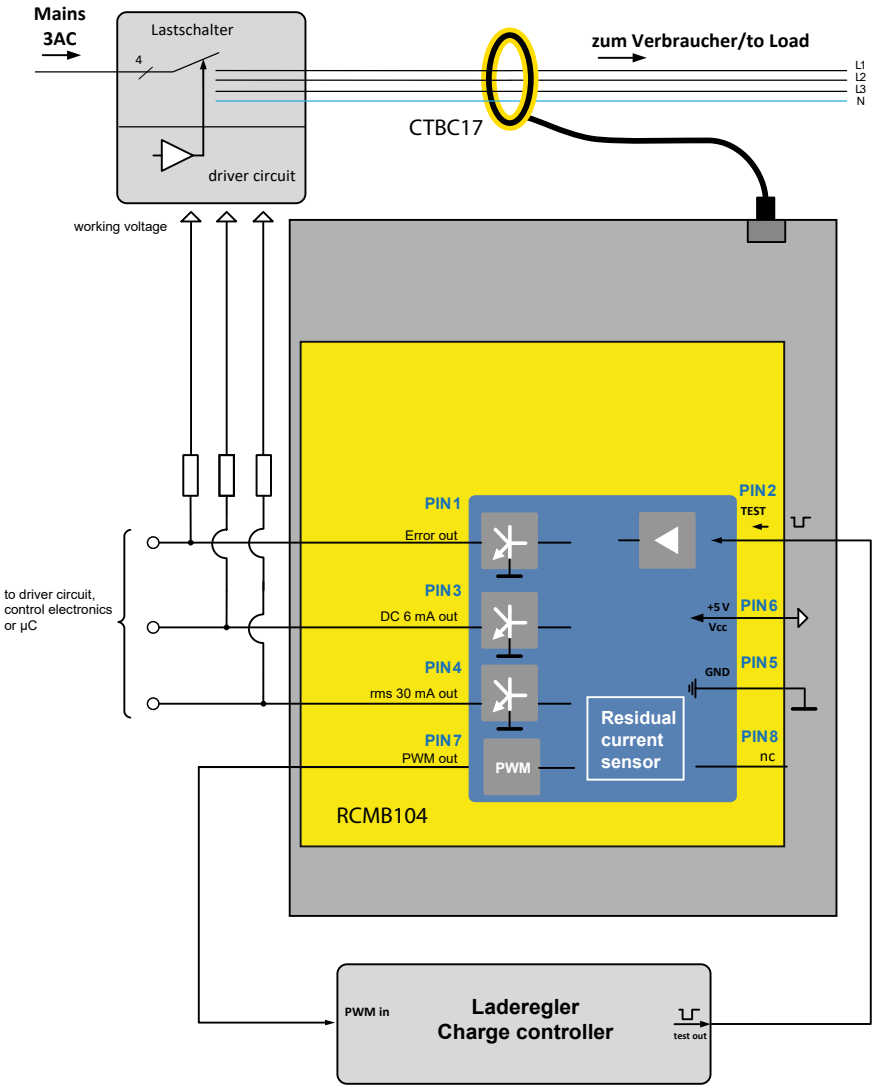

CTBC17 with CC613 charge controller

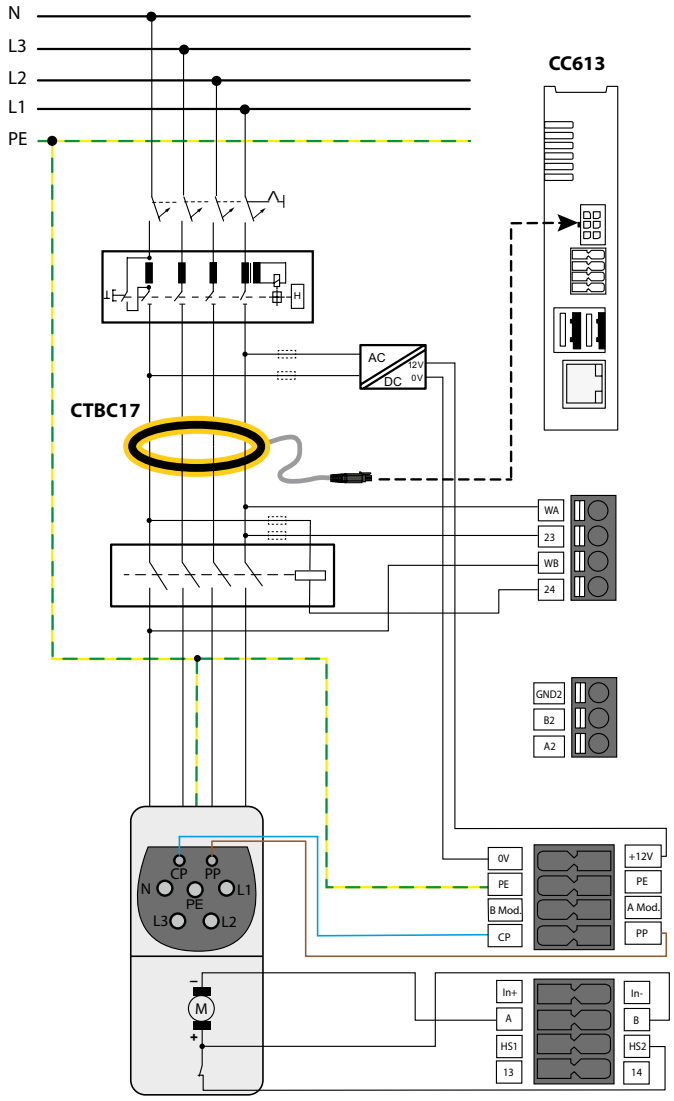

DPM2x16FP Display Module

To visualize the status of the charge controller or charging station/wallbox

Typical applications

- For use in electric vehicle (EV) charging stations, wall boxes and street light charging points

Approvals

Device features

- LED display with 2 x 16 characters
- Two RJ45 interface sockets

Standards

The display module has been developed in compliance with:

- EN 61851-1
- EN 61851-22
- EN 61439-1
- DIN IEC/TS 61439-7

Further information

For further information refer to our product range on www.bender.de.

Ordering information

Type	Art. NO.
DPM2x16FP	B94060120

Dimension diagram (dimensions in mm)

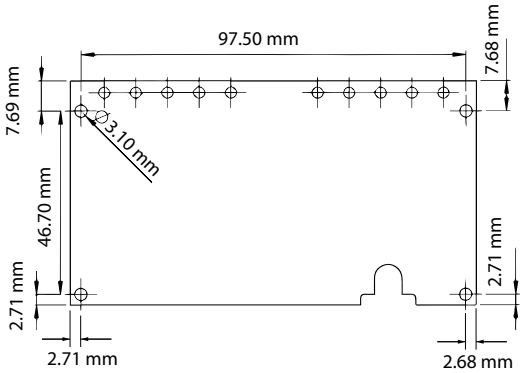

Note: Tolerance acc. to ISO 2768 - m

Technical data

Insulation coordination acc. to IEC 60664-1/IEC 60664-3

Rated voltage	12.5 V
Overvoltage category	III
Pollution degree	2
Rated impulse withstand voltage	800 V
Rated insulation voltage	12.5 V
Altitude	≤ 2000 m above sea level

Nominal voltage/nominal current

Nominal voltage	DC 3.3/5 V
Nominal voltage tolerance	± 5 %
Nominal current	< 100 mA

Environment/EMC

EMC	EN 61851-22
Operating temperature	-25…+75 °C

Classification of climatic conditions acc. to IEC 60721:

Stationary use (IEC 60721-3-3)	3K23 (except condensation and formation of ice)
Transport (IEC 60721-3-2)	2K11
Long-term storage (IEC 60721-3-1)	1K22

Classification of mechanical conditions acc. to IEC 60721:

Stationary use (IEC 60721-3-3)	3M11
Transport (IEC 60721-3-2)	2M4
Long-term storage (IEC 60721-3-1)	1M12

Connection

Connection to charge controller	via RJ45 cable
Connection to RFID module	via RJ45 cable
Cable length	< 1 m

Other

Brightness of display background illumination	to 0. . . 100 %
Bus	I2C
Protection class	IP00
Documentation number	D00296
Weight	150 g

RFID105-L1

RFID module with integrated status LEDs for use in combination with charge controllers used in electric vehicle charging stations, wall boxes and street light charging points

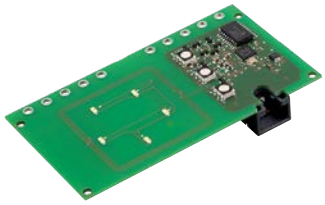

Approvals

Typical applications

- For use in combination with charge controllers used in electric vehicle charging stations, wall boxes and street light charging points

Standards

The RFID has been developed in compliance with:

- ISO 14443A/MIFARE
- EN 50364
- EN IEC 61851-21-2
- EN IEC 62368-1
- EN IEC 63000
- ETSI EN 300 330
- ETSI EN 301 489-1
- ETSI EN 301 489-3

Further information

For further information refer to our product range on www.bender.de.

Ordering information

Type	Art. No.
RFID105-L1	B94060105

Dimension diagram (dimensions in mm)

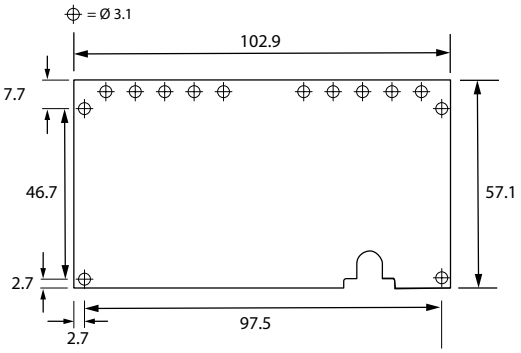

Technical data

Insulation coordination acc. to IEC 60664-1/IEC 60664-3

Rated voltage	12.5 V
Pollution degree	2
Rated impulse withstand voltage	800 V
Rated insulation voltage	12.5 V
Altitude	≤ 2,000 m AMSL

Rated voltage/rated current

Rated voltage	DC 3.3/5 V
Rated voltage tolerance	± 5 %
Rated current	140/64 mA

Frequency

Radio frequency	13.56 MHz
Max. transmitting power* 42 dBµA/m	

* at a distance of 10Lm

Environment/EMC

Operating temperature	-30…+70 °C

Climatic conditions acc. to IEC 60721:

Stationary use (IEC 60721-3-3)	3K23 (except condensation, water and formation of ice)
Transport (IEC 60721-3-2)	2K11
Long-term storage (IEC 60721-3-1)	1K21

Mechanical conditions acc. tolEC 60721:

Stationary use (IEC 60721-3-3)	3M11
Transport (IEC 60721-3-2)	2M4
Long-term storage (IEC 60721-3-1)	1M12

Connection

Charge controller connection	RJ45 cable*
Maximum cable length	< 2 m

* Type: CAT 5e Class D, RF/UTP, twisted pair patch cable, AWG 26/7

Other

Protection class	IP00
Maximum read distance	100 mm
Documentation number	D00453
Weight	25 g

RFID114

RFID module without integrated status LEDs for use in combination with charge controllers used in electric vehicle charging stations, wall boxes or street light charging points

Approvals

Typical applications

- For use in combination with charge controllers used in electric vehicle charging stations, wall boxes and street light charging points

Standards

The RFID module has been developed in compliance with:

- ISO 14443A/MIFARE
- EN 50364
- EN 60950-1
- EN 61851-1
- EN 61851-22
- ETSI EN 301 489-1 V2.1.1
- ETSI EN 301 489-3 V2.1.1
- EN 300 330 V2.1.1

Further information

For further information refer to our product range on www.bender.de.

Ordering information

Type	Art. No.
RFID114 (RJ45 cable (length 500 mm) included)	B94060114

Dimension diagram (dimensions in mm)

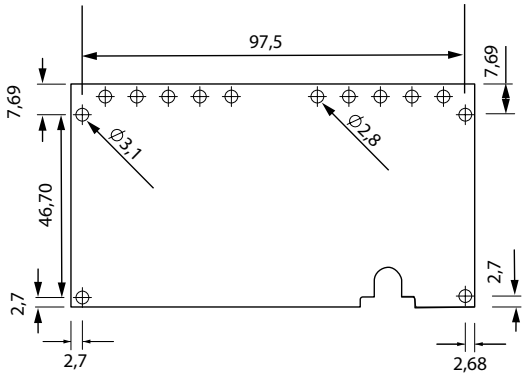

Technical data

Insulation coordination acc. to IEC 60664-1/IEC 60664-3	
Rated voltage	12.5 V
Overvoltage category	III
Pollution degree	3
Rated impulse withstand voltage	800 V
Rated insulation voltage	12.5 V
Altitude	≤ 2000 m AMSL
Nominal voltage/nominal current	
Nominal voltage	DC 3.3 V
Nominal voltage tolerance	±5 %
Nominal current	80 mA
Frequency	
Radio frequency	13.56 MHz
Environment	
Operating temperature	-30…+70 °C
Climatic conditions acc. to IEC 60721:	
Stationary use (IEC 60721-3-3)	3K23 (except condensation, water and formation of ice)
Transport (IEC 60721-3-2)	2K11
Long-term storage (IEC 60721-3-1)	1K21
Mechanical conditions acc. to IEC 60721:	
Stationary use (IEC 60721-3-3)	3M11
Transport (IEC 60721-3-2)	2M4
Long-term storage (IEC 60721-3-1)	1M12
Connection	
Connection to charge controller	via RJ45 cable
Maximum cable length	3 m
Other	
Degree of protection	IP00
Maximum reading distance	100 mm
Documentation number	D00328
Weight	25 g

RFID117-L1

RFID module with integrated status LEDs and reinforced antenna power, for use in combination with charge controllers used in electric vehicle charging stations, wall boxes and street light charging points

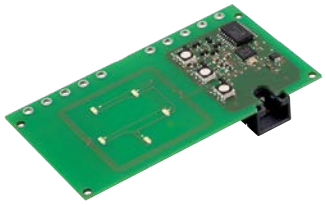

Typical applications

- For use in combination with charge controllers used in electric vehicle charging stations, wall boxes and street light charging points
- For e.g. Giro-e applications

Standards

The RFID has been developed in compliance with:

- ISO 14443A/MIFARE
- EN 50364
- EN IEC 61851-21-2
- EN IEC 62368-1
- EN IEC 63000
- ETSI EN 300 330 V2.1.1
- ETSI EN 301 489-1 V2.2.3
- ETSI EN 301 489-3

Approvals

Further information

For further information refer to our product range on www.bender.de.

Ordering information

Type	Art. No.
RFID117-L1 (RJ45 cable (length 500 mm) included)	B94060117

Dimension diagram (dimensions in mm)

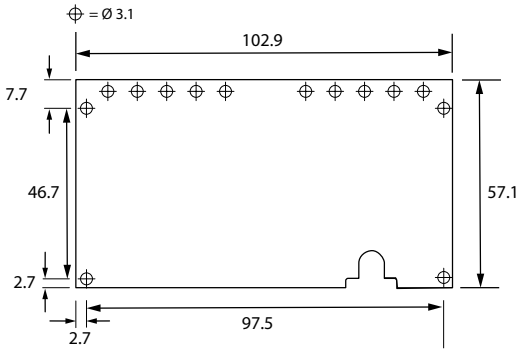

Technical data

Insulation coordination acc. to IEC 60664-1/IEC 60664-3

Rated voltage	12.5 V
Pollution degree	2
Rated impulse withstand voltage	800 V
Rated insulation voltage	12.5 V
Altitude	≤ 2,000 m AMSL

Rated voltage/rated current

Rated voltage	DC 3.3/5 V
Rated voltage tolerance	± 5 %
Rated current	140/64 mA

Frequency

Radio frequency	13.56 MHz
Max. transmitting power*	42 dBµA/m

* at a distance of 10Lm

Environment/EMC

Operating temperature	-30…+70 °C

Climatic conditions acc. to IEC 60721:

Stationary use (IEC 60721-3-3)	3K23 (except condensation, water and formation of ice)
Transport (IEC 60721-3-2)	2K11
Long-term storage (IEC 60721-3-1)	1K21

Mechanical conditions acc. toIEC 60721:

Stationary use (IEC 60721-3-3)	3M11
Transport (IEC 60721-3-2)	2M4
Long-term storage (IEC 60721-3-1)	1M12

Connection

Charge controller connection	RJ45 cable*
Maximum cable length	< 2 m

* Type: CAT 5e Class D, RF/UTP, twisted pair patch cable, AWG 26/7

Other

Protection class	IP00
Maximum read distance	100 mm
Documentation number	D00422
Weight	25 g

Device overview Universal Devices for Power Quality and Energy Measurement PEM

		 **LINETRAXX® PEM353**
	Catalogue page	**272**
Normative requirements	**Accuracy class according to IEC 62053-22**	0.5 s
	DIN EN 50160 (report)	–
	DIN EN 61000-4-7 (harmonic)	Class II
	DIN EN 61000-4-15 (flicker) DIN EN 61000-4-30 (PQ measurement method)	–
Parameters	**Phase voltages/Line voltages**	✓
	Phase currents	✓
	Neutral current I_4	✓ (PEM353-N only)
	Neutral current I_4 (calculated)	✓
	Frequency / phase angle	✓
	Reactive and active power import/ Reactive and active power export	✓
	Voltage unbalance/current unbalance	✓
	Power	per phase and total S in kVA, P in kW, Q in kvar
	Displacement factor cos (φ)/power factor λ	✓
	Total harmonic distortion (THD_U/THD_I)	up to the 31rd
	Harmonic components voltage	up to the 31rd
	Harmonic components current	up to the 31rd
	Transient detection	–
	Overvoltage (swell)	–
	Undervoltage (sag)	–
	Flicker severity P_{ST}	–
Features	**Data recorder / HighSpeed data recorder**	5/0
	Waveform recorder	–
	Digital inputs	4
	Digital outputs	2 (PEM353-P only)
	Relay outputs (RO)	2 (PEM353, PEM353-N only)
Technical aspects	**Voltage supply**	AC/DC 95…250 V (47…440 Hz)
	Sampling rate	3,2 kHz
	Temperature	-25…+55 °C
	Communication	Modbus RTU
	Product details (Products on www.bender.de/en)	

Energy meter and Measuring current transformer for universal measuring devices

						
	ALD1	**ALE3**	**AWD3**	**PCD07**	**CTB31/CTB41/CTB51**	**KBR18/KBR32**
Catalogue page	**280**	**280**	**280**	**280**	**277**	**277**
Type	Energy meter	Energy meter	Energy meter	S0 pulse counter	Measuring current transformer	Measuring current transformer
Description	1PH./32A MID MODBUS RTU	3PH./65A MID MODBUS RTU	3PH./6A MID MODBUS RTU	(four-fold) with MODBUS RTU	–	–
Product details (Products on www.bender.de/en)						

Power Quality and Energy Measurement LINETRAXX® PEM353

Typical applications

- Modern indicating instrument for electrical quantities, e.g. as a replacement for analogue indicating instruments
- Power quality monitoring
- Limit value monitoring (setpoints) with alarm forwarding
- Measurement and monitoring of the N conductor
- Energy and power measurement, e.g. as part of energy data monitoring

Approvals

Device features

- Accuracy class according to IEC 62053-22: 0,5
- Measured quantities
  - Phase voltages U_{L1}, U_{L2}, U_{L3} in V
  - Line voltages U_{L1L2}, U_{L2L3}, U_{L3L1} in V
  - Phase currents I_1, I_2, I_3 in A
  - Neutral current (calculated) I_4 in A
  - Frequency *f* in Hz
  - Phase angle for *U* and *I* in °
  - Power per phase conductor S in kVA, P in kW, Q in kvar
  - Total power S in kVA, P in kW, Q in kvar
  - Displacement factor cos (φ)
  - Power factor λ
  - Active and reactive energy import in kWh, kvarh
  - Active and reactive energy export in kWh, kvarh
  - Voltage unbalance in %
  - Current unbalance in %
  - Harmonic distortion (THD) for *U* and *I*
  - k-factor for *I*
- Limit value monitoring (setpoints) with alarm forwarding
- Energy and power measurement with log and tariff system
- Configurable start page with 4 measured quantities
- Measurement and monitoring of the N conductor (PEM353-N only)

Standards

PEM353 was designed in accordance with the following standards:

- **DIN EN 62053-22 (VDE 0418 Part 3-22)**
  Electricity metering equipment (a.c.) - Particular requirements - Part 22: Static meters for active energy (classes 0.2 and 0.5) (IEC 62053);
- **DIN EN 61557-12 (VDE 0413-12)**
  Electrical safety in low voltage distribution systems up to 1000 V a.c. and 1500 V d.c. – Equipment for testing, measuring or monitoring of protective measures – Part 12:
  Performance measuring and monitoring devices (PMD)
- **DIN IEC 61554:2002-08**
  Panel mounted equipment – Electrical measuring instruments – Dimensions for panel mounting (IEC 61554:1999)

Further information

For further information refer to our product range on www.bender.de.

Ordering information

			PEM353	PEM353-P	PEM353-N
Ordering details			B93100355	B93100354	B93100353
Measurement technique	Accuracy class of the active energy (acc. to IEC 62053-22)		Current transformer 5 A: Class 0,5 Current transformer 1 A: Class 1,0		
	Volatage inputs (L1, L2, L3)		45…65 Hz TN and TT system (earthed): AC 230/400…400/690 V, CAT III 600 V IT system (unearthed): AC 400…480 V, CAT III 300 V / AC 500…690 V, CAT II 1000 V		
	Current inputs (I_1, I_2, I_3)		5 A / 1 A		
	I_4		–	–	5 A
	Harmonic / Distortion U/I		up to the 31st		
	Sampling rate		3,2 kHz		
Data logger	Setpoints limit value monitoring		9		
	Logs		Event log (SOE log), Max./Min. log Peak demand log, Energy meter log (monthly values)		
	4 MB	Data recorder	–	–	5
		Load data log (daily and monthly values)	–	–	✓
Properties	Digital inputs		4		
	Digital outputs		2 x relay	2 x pulse	2 x relay
	Supply voltage		95…250 V; DC, AC 47…440 Hz		
	Communication interface		RS-485 (Modbus RTU, BACnet MS/TP, DNP)		
	Language		English		

Technical data

Insulation coordination acc. to IEC 60664-1/IEC 60664-3

Pollution degree	2
Climate category operation	3K24
Max. installation altitude above NN:	2000 m

Definitionen

Measuring circuit 1 (IC1)	(L1, L2, L3, N)
TN and TT system	
Nominal voltage	400/690 V
Overvoltage category/Rated insulation voltage	III/600 V
IT system	
Nominal voltage	480 V
Overvoltage category/Rated insulation voltage	III/300 V
Nominal voltage	690 V
Overvoltage category/Rated insulation voltage	II/1000 V
Measuring circuit 2 (IC2)	(•I11, I12, •I21, I22, •I31, I32)
Overvoltage category/Rated insulation voltage	III/300 V
Supply circuit (IC3)	(A1/+, A2/-)
Overvoltage category/Rated insulation voltage	III/300 V
Output circuit 1 (IC4) at PEM353-N and PEM353	(DO13, DO14)
Overvoltage category/Rated insulation voltage	III/300 V
Output circuit 1 (IC4) at PEM353-P	(E1+, E1-)
Overvoltage category/Rated insulation voltage	III/50 V
Output circuit 2 (IC5) at PEM353-N and PEM353	(DO23, DO24)
Overvoltage category/Rated insulation voltage	III/300 V
Output circuit 2 (IC5) at PEM353-P	(E2+, E2-)
Overvoltage category/Rated insulation voltage	III/50 V
Control circuit 1 (IC6)	(DIC, DI1, DI2, DI3, DI4)
Overvoltage category/Rated insulation voltage	III/50 V
Control circuit 2 -RS-485 (IC7)	(D+, D-)
Overvoltage category/Rated insulation voltage	III/50 V
Rated impulse voltage	
IC1/(IC2…7)	6 kV
IC2/(IC3…7)	4 kV
IC3/(IC4…7)	4 kV
IC4/(IC5…7)	4 kV
IC5/(IC6…7)	4 kV
IC6/IC7	800 V
Rated insulation voltage	
IC1/(IC2…7)	1000 V
IC2/(IC3…5)	250 V
IC2/(IC6…7)	250 V
IC3/(IC4…7)	250 V
IC4/(IC5…7)	250 V
IC5/(IC6…7)	250 V
IC6/IC7	32 V
Safe separation (reinforced insulation) between	
IC1/(IC2…7)	overvoltage category III, 600 V
IC2/(IC3…7)	overvoltage category III, 300 V
IC3/(IC4…7)	overvoltage category III, 300 V
IC4/(IC5…7)	overvoltage category III, 300 V
IC5/(IC6…7)	overvoltage category III, 300 V
Voltage test (routine test) acc. to IEC 61010-1:	
IC1/(IC2…7)	AC 2.0 kV, 1 minute
IC2/(IC3…7)	AC 2.0 kV, 1 minute
IC3/(IC4…7)	AC 2.0 kV, 1 minute
IC4/(IC5…7)	AC 2.0 kV, 1 minute
IC5/(IC6…7)	AC 2.0 kV, 1 minute

Supply voltage

Supply voltage	AC/DC 95…250 V (±10 %)
Frequency range	DC, 47 … 440 Hz
Power consumption	< 5 VA

Measuring voltage inputs

see insulation coordination	
Measuring range	10… 828 V (120 % U_n, max)
Rated frequency	45…65 Hz
Internal resistance $U_{L1-N,L2-N,L3-N}$	> 12 MΩ

Transformation ratio of the measuring voltage transformer

Primary	1 …1,000,000 V
Secondary	1…690 V
Max. transformation ratio	10,000

Measuring current transformer inputs

I_{nom}	5 A
Measuring range	0.1 … 200 % I_{nom}
Load	< 0.15 VA
Overload range	2 x I_{nom} permanent, 20 x I_{nom} ≤ 1 s

Transformation ratio of the measuring current transformer

Primary	1 … 30000 A
Secondary	1…5 A

Accuracies (0MV = of measured value/0FS = of full-scale value)

Phase voltage $U_{L1-N,L2-N,L3-N}$	±0.2 % 0MV, +0.05 % 0FS
Current $I_{1,2,3}$	±0.2 % 0MV, +0.05 % 0FS
Neutral current I_4 (PEM353-N)	±0.2 % 0MV
Frequency f	±0.02 Hz
Phasing	±1 °
Active power, reactive power	±0.5 % 0MV, +0.05 % 0FS
Power factor λ	±0.5 %
Measurement of the active energy acc. to DIN EN 62053-22 (VDE 0418 part 3-22)	
Accuracy class with 5 A measuring current transformers	0.5
Accuracy class with 1 A measuring current transformers	1
Measurement of the voltage rms values	acc. to DIN EN 61557-12 (VDE 0413-12), chapter 4.7.6
Measurement of the phase current rms values	acc. to DIN EN 61557-12 (VDE 0413-12), chapter 4.7.5
Frequency measurement	acc. to DIN EN 61557-12 (VDE 0413-12), chapter 4.7.4

Interface

Interface: Protocol	RS-485: Modbus RTU, BACnet MS/TP, DNP
Baud rate	1.2…38.4 kbit/s
Cable length	0…1200 m
Recommended cable (shielded)	J-Y(St)Y min. 2 x 0.8

Switching elements

Outputs	2 N/O contacts
Operating principle	N/O operation
PEM353-N, PEM353	
Relay contacts, N/O operation, AC 250 V or DC 30 V	5 A
Minimum current I_{min}	1 mA at AC/DC ≥ 10 V
PEM353-P	
Pulse output	max. DC 30 V, max. 30 mA
Cable length	≤ 30 m
Inputs	4 common galv. isolated digital inputs
I_{min}	1 mA
U_{DI}	DC 24 V

Environment/EMC

EMC	IEC 61326-1
Operating temperature	-25…+55 °C
Classification of climatic conditions acc. to IEC 60721 (stationary use)	3K24
Classification of mechanical conditions acc. to IEC 60721 (stationary use)	3M11
Range of use	< 2000 m

Connection

Connection type	screw-type terminals, plug-in connector

Other

Degree of protection, installation	IP20
Degree of protection, front (with rubber seal)	IP54
Documentation number	D00335
Weight	≤ 350 g

Dimension diagram (dimensions in mm)

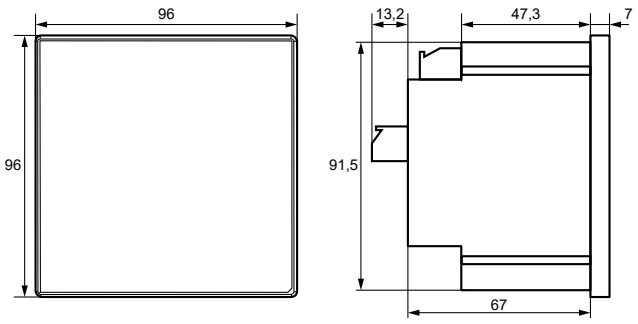

Panel cutout (dimensions in mm)

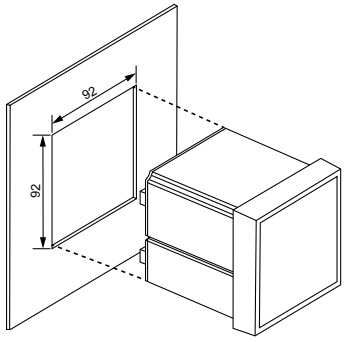

Terminals

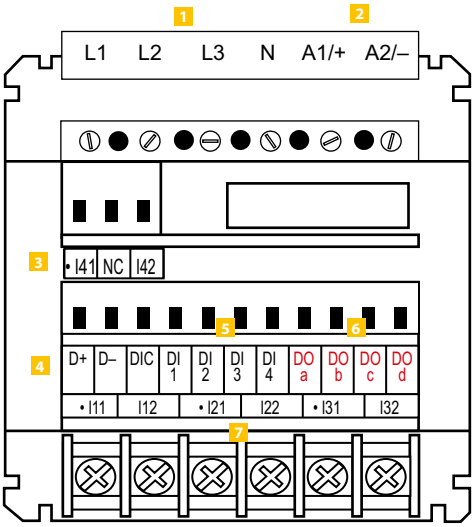

1. Measuring voltage inputs:
   The measuring leads should be protected with appropriate fuses.
2. Supply voltage: Power protection by a 6 A fuse, quick response.
   If being supplied from an IT system, both lines have to be protected by a fuse.
3. Measuring current inputs I_4 (only PEM353-N)
4. RS-485 bus connection
5. Digital inputs
6. Digital outputs (N/O contacts)
7. Measuring current inputs $I_{1...3}$

	DO a	DO b	DO c	DO d
PEM353(-N)	DO13	DO14	DO23	DO24
PEM353-P	E1+	E1-	E2+	E2-

Wiring diagrams with voltage transformers (medium and high voltage)

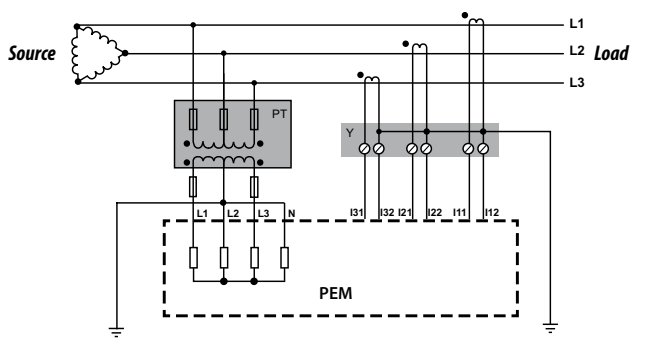

Three-phase 3-wire system 3P3W with 3 measuring current transformers

When used in a 3-wire system, the connection type (Setup > Basic > Wiring Mode) must be set to **3P3W**.

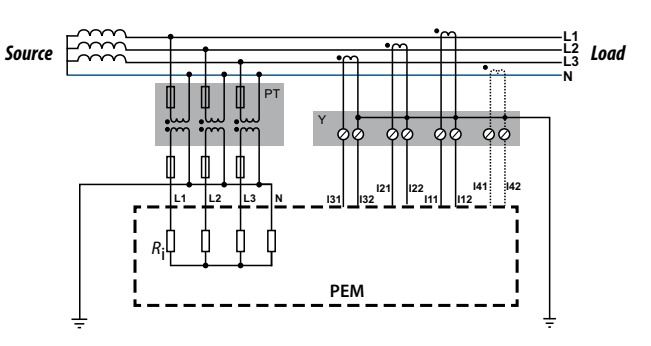

Three-phase 4-wire system (example TN-S system) 3P4W with 3 voltage transformers

When using this wiring, the connection type (Setup > Basic > Wiring Mode) must be set to **3P4W**.

Y Isolating terminal of the measuring current transformers

PT The transformation ratio in the PEM353 can be set by specifying the primary and secondary transformation ratio. Odd ratios can also be configured.

Y Isolating terminal of the measuring current transformers

I_4 Measurement I_4 for PEM353-N only

PT The transformation ratio in the PEM353 can be set by specifying the primary and secondary transformation ratio. Odd ratios can also be configured.

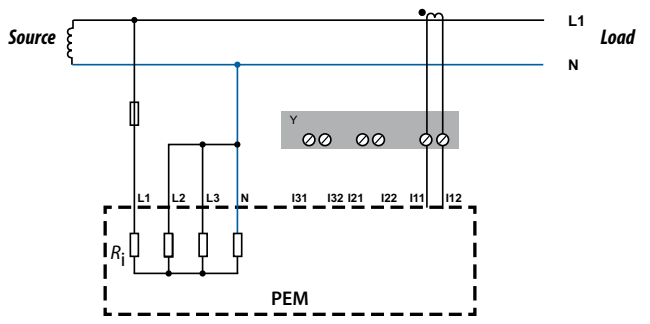

Single-phase 2-wire system 1P2W L-N

When using this wiring, the connection type (Setup > Basic > Wiring Mode) must be set to **1P2W L-N**.

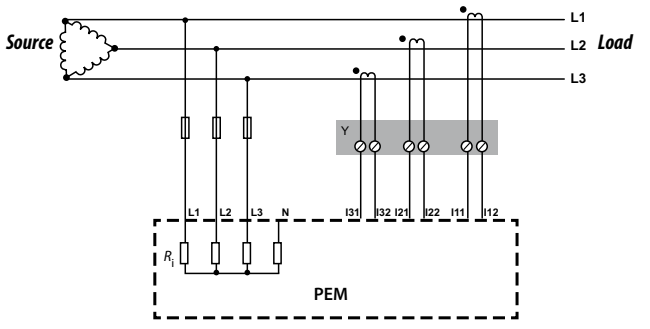

3P3W with 3 measuring current transformers

When used in a 3-wire system, the connection type (Setup > Basic > Wiring Mode) must be set to **3P3W**.

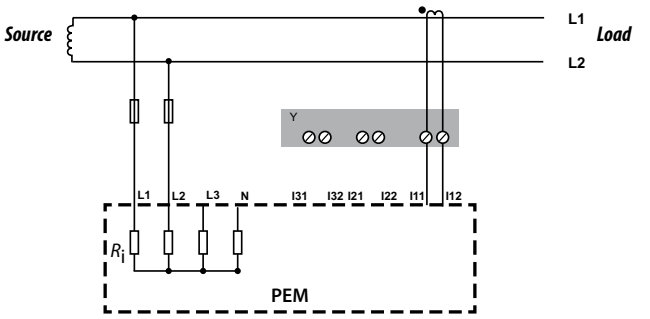

Single-phase 2-wire system 1P2W L-L

When using this wiring, the connection type (Setup > Basic > Wiring Mode) must be set to **1P2W L-L**.

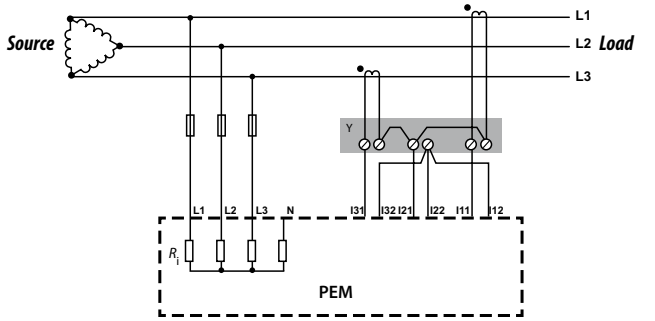

3P3W with 2 measuring current transformers (Aron circuit)

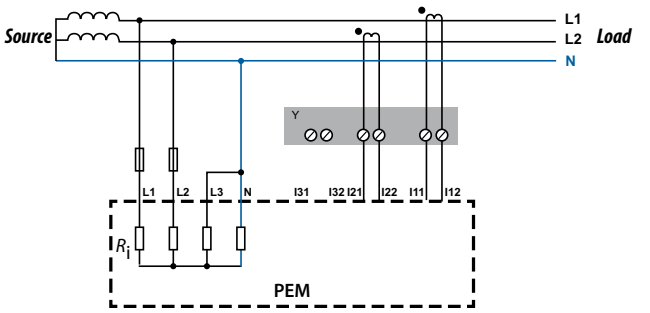

Single-phase 3-wire system 1P3W with 2 measuring current transformers

When used in a 3-wire system, the connection type (Setup > Basic > Wiring Mode) must be set to **1P3W**.

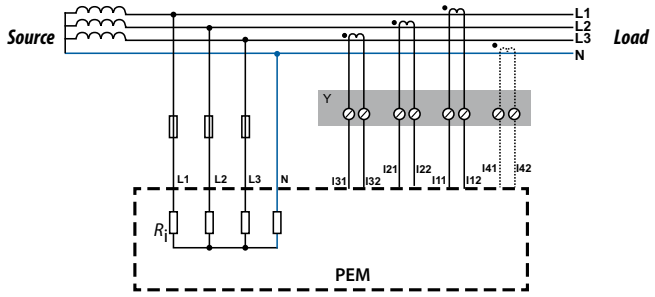

3P4W with 3 (4) measuring current transformers

When using this wiring, the connection type (Setup > Basic > Wiring Mode) must be set to **3P4W**.

Y Isolating terminal of the measuring current transformers

Y Isolating terminal of the measuring current transformers

I_4 Measurement I_4 for PEM353-N only

Measuring current transformer for universal measuring devices

Window-type/Split-core current transformer

Approvals

Device features

CTB41/CTB51

- Window-type current transformer
- Screwless connection technique
- Maintenance-free, gas-tight connection
- Max. operating voltages up to 1.2 kV
- Can also be used in 690 V systems
- Unbreakable plastic enclosure, self-extinguishing, UL94-V0, flame-resistant

KBR18/KBR32

- Split-core current transformer (mounting without disconnecting the primary conductor)
- Incl. connecting cable (2.5 m)
- Max. operating voltages up to 0.72 kV

Standards

The measuring current transformers were designed in accordance with the following standards:

- IEC 61869-1
- IEC 61869-2
- IEC 61010-1

Further information

For further information refer to our product range on www.bender.de.

Ordering details window-type current transformer

Model	Type	Accuracy	Secondary current	Primary current	Art. No.
CTB31	WL605 CL. 1	1	5	60	B98086001
CTB31	WL601 CL. 1	1	1		B98086002
CTB31	WL755 CL. 1	1	5	75	B98086003
CTB31	WL751 CL. 1	1	1		B98086004
CTB31	WL1255 CL. 0.5	0.5	5	125	B98086005
CTB31	WL1255 CL. 1	1			B98086007
CTB31	WL1251 CL. 0.5	0.5	1		B98086006
CTB31	WL1251 CL. 1	1			B98086008
CTB31	WL1505 CL. 0.5	0.5	5	150	B98086009
CTB31	WL1505 CL. 1	1			B98086011
CTB31	WL1501 CL. 0.5	0.5	1		B98086010
CTB31	WL1501 CL. 1	1			B98086012
CTB31	WL2005 CL. 0.5	0.5	5	200	B98086013
CTB31	WL2005 CL. 1	1			B98086015
CTB31	WL2001 CL. 0.5	0.5	1		B98086014
CTB31	WL2001 CL. 1	1			B98086016
CTB41	WL2505 CL. 0.5	0.5	5	250	B98086017
CTB41	WL2505 CL. 1	1			B98086019
CTB41	WL2501 CL. 0.5	0.5	1		B98086018
CTB41	WL2501 CL. 1	1			B98086020
CTB41	WL3005 CL. 0.5	0.5	5	300	B98086021
CTB41	WL3005 CL. 1	1			B98086023
CTB41	WL3001 CL. 0.5	0.5	1		B98086022
CTB41	WL3001 CL. 1	1			B98086024
CTB41	WL4005 CL. 1	1	5	400	B98086026
CTB41	WL4005 CL. 0.5	0.5			B98086027
CTB41	WL4001 CL. 1	1	1		B98086028
CTB41	WL4001 CL. 0.5	0.5			B98086025
CTB41	WL5005 CL. 1	1	5	500	B98086029
CTB41	WL5005 CL. 0.5	0.5			B98086031
CTB41	WL5001 CL. 1	1	1		B98086032
CTB41	WL5001 CL. 0.5	0.5			B98086033

Model	Type	Accuracy	Secondary current	Primary current	Art. No.
CTB51	WL6005 CL. 1	1	5	600	B98086034
CTB51	WL6005 CL. 0.5	0.5			B98086035
CTB51	WL6001 CL. 1	1	1		B98086036
CTB51	WL6001 CL. 0.5	0.5			B98086037
CTB51	WL8005 CL. 1	1	5	800	B98086038
CTB51	WL8005 CL. 0.5	0.5			B98086039
CTB51	WL8001 CL. 1	1	1		B98086040
CTB51	WL8001 CL. 0.5	0.5			B98086041
CTB51	WL10005 CL. 1	1	5	1000	B98086042
CTB51	WL10005 CL. 0.5	0.5			B98086043
CTB51	WL10001 CL. 1	1	1		B98086044
CTB51	WL10001 CL. 0.5	0.5			B98086045

Ordering details split-core current transformer

Model	Type	Accuracy	Secondary current	Primary current	Art. No.
KBR18	WLS501 KL. 3FS5	3FS5	1	50	B98086046
KBR18	WLS1001 KL. 3FS5	3FS5	1	100	B98086047
KBR18	WLS1501 KL. 3FS5	3FS5	1	150	B98086048

Model	Type	Accuracy	Secondary current	Primary current	Art. No.
KBR32	WLS2501 KL. 3FS5	3FS5	1	250	B98086049
KBR32	WLS5001 KL. 1FS5	3FS5	1	500	B98086050

Selection guide current transformer/PEM

Design specifications of the measuring ranges current transformer/PEM

The secondary current of the current transformer has to be adjusted to the current input of the measuring device. The following table will help you to select the device type.

Current transformer secondary current	PEM353(-x) (5 A)	PEMxxx(-xx5) (5 A)	PEMxxx-xx1 (1 A)
5 A	✓	✓	–
1 A	–[1)]	–[1)]	✓

[1)] *Note: In principle, measuring current transformers can also be operated with 1 A secondary current on measuring devices with 5 A current input. In this case, the accuracy class is expected to be reduced by one class (e.g. 0.5 to 1).*

The measurement accuracy classes of the system

The measurement accuracy class of the system is influenced by both the accuracy classes of the measuring current transformers und the measuring device. Refer to DIN EN 61557-12, Annex E.2.

Accuracy classes of measuring current transformers	PEM3xx (0.5 S)	PEM5xx (0.5 S)
1	1	1
0.5	1	1

Technical Data

CTB31

Rated continuous thermal current I_{cth}	1.2 x I_N
Rated short-time thermal current I_{th}	60 x I_N, 1 s
Max. operating voltage U_m	1.2 kV, U_{eff}
Insulation test voltage	6 kV, U_{eff}, 50 Hz, 1 min
Nominal frequency	50/60 Hz
Insulation class	E
Operating temperature	-5…50 °C

CTB41

Rated continuous thermal current I_{cth}	1.2 x I_N
Rated short-time thermal current I_{th}	60 x I_N, 1 s
Max. operating voltage U_m	1.2 kV, U_{eff}
Insulation test voltage	6 kV, U_{eff}, 50 Hz, 1 min
Nominal frequency	50/60 Hz
Insulation class	E
Operating temperature	-5…50 °C

CTB51

Rated continuous thermal current I_{cth}	1.2 x I_N
Rated short-time thermal current I_{th}	60 x I_N, 1 s
Max. operating voltage U_m	1.2 kV, U_{eff}
Insulation test voltage	6 kV, U_{eff}, 50 Hz, 1 min
Nominal frequency	50/60 Hz
Insulation class	E
Operating temperature	-5…50 °C

Documentation number	D00231

KBR18

Rated continuous thermal current I_{cth}	1.2 x I_N
Rated short-time thermal current I_{th}	60 x I_N, 1 s
Max. operating voltage U_m	0.72 kV, U_{eff}
Insulation test voltage	3 kV, U_{eff}, 50 Hz, 1 min
Nominal frequency	50 Hz
Insulation class	E
Operating temperature	-5…50 °C

KBR32

Rated continuous thermal current I_{cth}	1.2 x I_N
Rated short-time thermal current I_{th}	60 x I_N, 1 s
Max. operating voltage U_m	0.72 kV, U_{eff}
Insulation test voltage	3 kV, U_{eff}, 50 Hz, 1 min
Nominal frequency	50 Hz
Insulation class	E
Operating temperature	-5…50 °C

CTB31

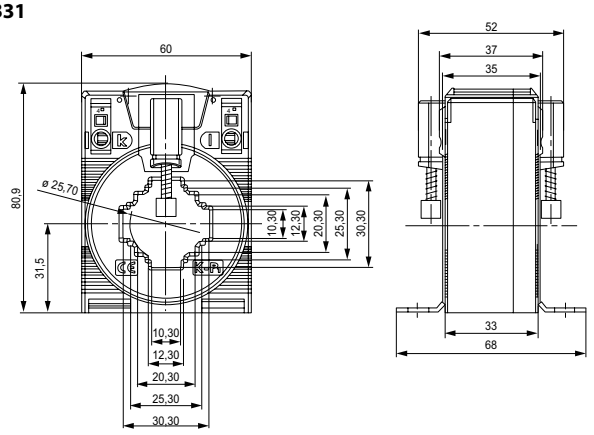

Dimensions (mm)	
Busbar 1	30 x 10
Busbar 2	25 x 12
Busbar 3	20 x 20
Circular conductor	25,7
Installation width	60
Installation height	80,9
Overall depth	52

CTB41

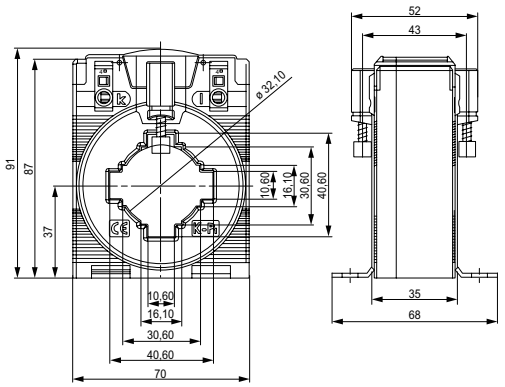

Dimensions (mm)	
Busbar 1	40 x 10
Busbar 2	30 x 15
Circular conductor	32
Installation width	70
Installation height	91
Overall depth	52

CTB51

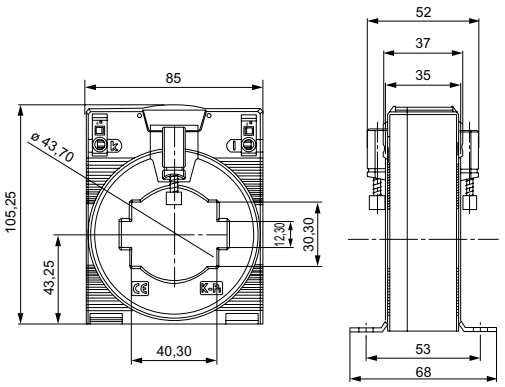

Dimensions (mm)	
Busbar 1	50 x 12
Busbar 2	40 x 30
Circular conductor	44
Installation width	85
Installation height	105.25
Overall depth	52

KBR18

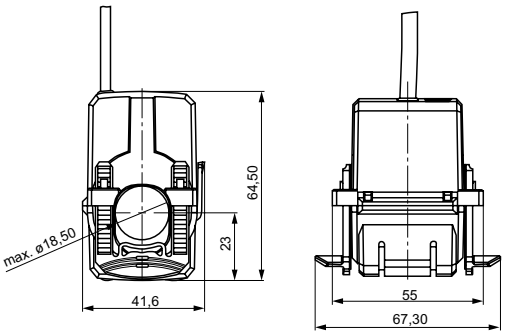

Dimensions (mm)	
Circular conductor	18
Installation width	41.6
Installation height	64.5
Installation depth incl. fixation clips	67.3

KBR32

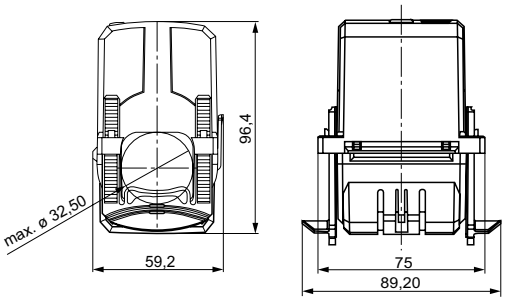

Dimensions (mm)	
Circular conductor	32.5
Installation width	59.2
Installation height	96.4
Installation depth incl. fixation clips	89.2

Energy meter

Device features

- Energy meter with Modbus RTU interface
- MID approved
- 7-digit display
- Automatic recognition of bus transmission rate and parity
- Lead seal possible with cap as accessory
- Resettable, partial reading
- In addition to active energy metering, measured data such as current, voltage, power and cos (phi) is also available.
- DIN rail mounting

Approvals

Application fields

- Registration of relevant energy management data
- Suitable for billing purposes

Standards

The energy meters have been developed in accordance with the following standards:

- Accuracy class B acc. to EN 50470-3
- Accuracy class 1 acc. to IEC 62053-21

Further information

For more information see our product range on www.bender.de.

Ordering information

Type	Description	Art. No.
ALD1	Energy meter 1Ph/32 A MID Modbus RTU	B93101005
ALE3	Energy meter 3Ph/65 A MID Modbus RTU	B93101006
AWD3	Energy meter 3Ph/6 A MID Modbus RTU	B93101007
PCD7	S0 pulse counter (four-fold) with Modbus RTU	B93101008

Accessories

Description	Art. No.
Sealable cover for ALD1 (two per counter)	B93101009
Sealable cover for ALE3/AWD3 (four per counter)	B93101010

Technical data

ALD1

Accuracy class	B acc. to EN 50470-3 1 acc. to IEC 62053-21
Operating voltage	AC 230 V, 50 Hz
Tolerance	-20 %/+15 %
Reference current/maximum current	I_{ref} = 5 A, I_{max} = 32 A
Starting current/minimum current	I_{st} = 20 mA, I_{min} = 0.25 A
Power consumption	active power 0.4 W
Counting range	00'000.00…99'999.99 100'000.0…999'999.9
Pulses per kWh	LC display 2000 imp/kWh

ALE3

Accuracy class	B acc. to EN 50470-3 1 acc. to IEC 62053-21
Operating voltage	3 x AC 230/400 V, 50 Hz
Tolerance	-20 %/+15 %
Reference current/maximum current	I_{ref} = 10 A, I_{max} = 65 A
Starting current/minimum current	I_{st} = 40 mA, I_{min} = 0.5 A
Power consumption	active 0.4 W per phase
Counting range	00 000.00…99 999.99 100 000.0…999 999.9
LC display with background illumination,	6 mm high digits
Display without mains voltage	capacitor supported LCD maximum for two periods of 10 days
Pulses per kWh	LED 1000 imp/kWh

AWD3

Accuracy class	B acc. to EN50470-3, 1 acc. to IEC 62053-21
Operating voltage	3 x AC 230/400 V, 50 Hz
Tolerance	-20 %/+15 %
Transformer measurement	5…1500 A
Reference current/maximum current	I_{ref} = 5 A, I_{max} = 6 A
Starting current/minimum current	I_{st} = 10 mA, I_{min} = 0,05 A
Conversion factor	5:5, 50:5, 100:5, 150:5, 200:5, 250:5, 300:5, 400:5, 500:5, 600:5, 750:5, 1000:5, 1250:5, 1500:5
Power consumption	active 0.4 W per phase
Counting range	000˙000.0…999˙999.9 1˙000˙000…9˙999˙999
LC display with background illumination	6 mm high digits
Display without mains voltage	capacitor supported LCD maximum for two periods of 10 days
Documentation number	D00230

Dimension diagram(dimensions in mm)

1 phase

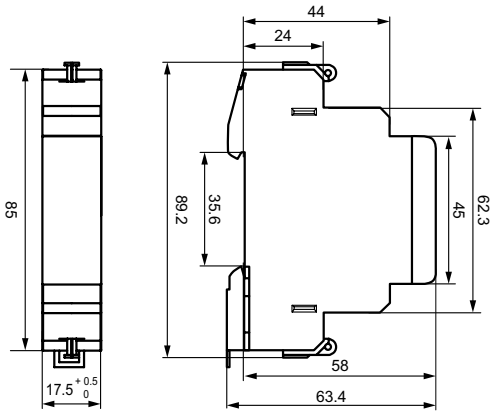

3 phase

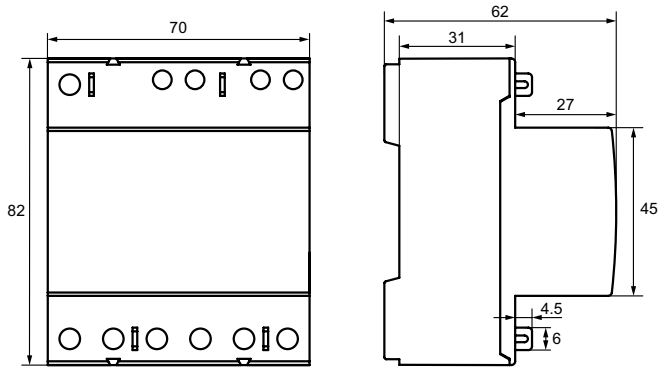

Wiring diagrams

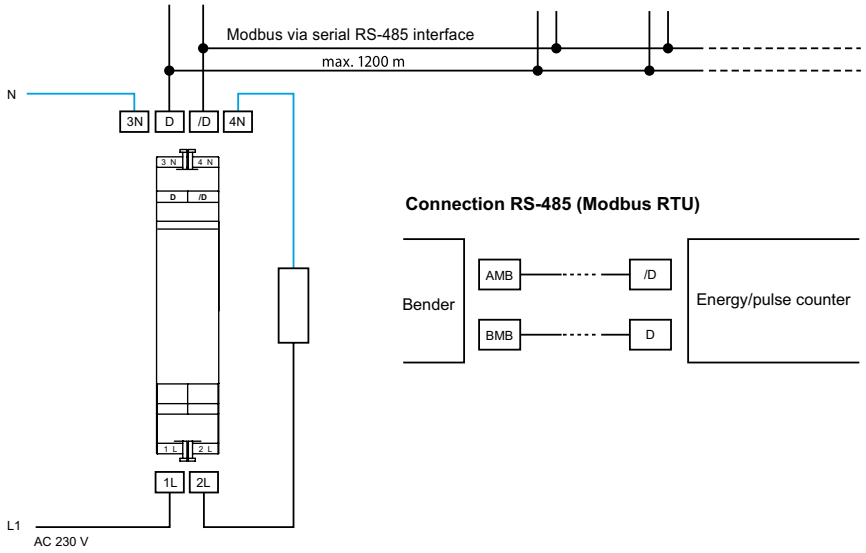

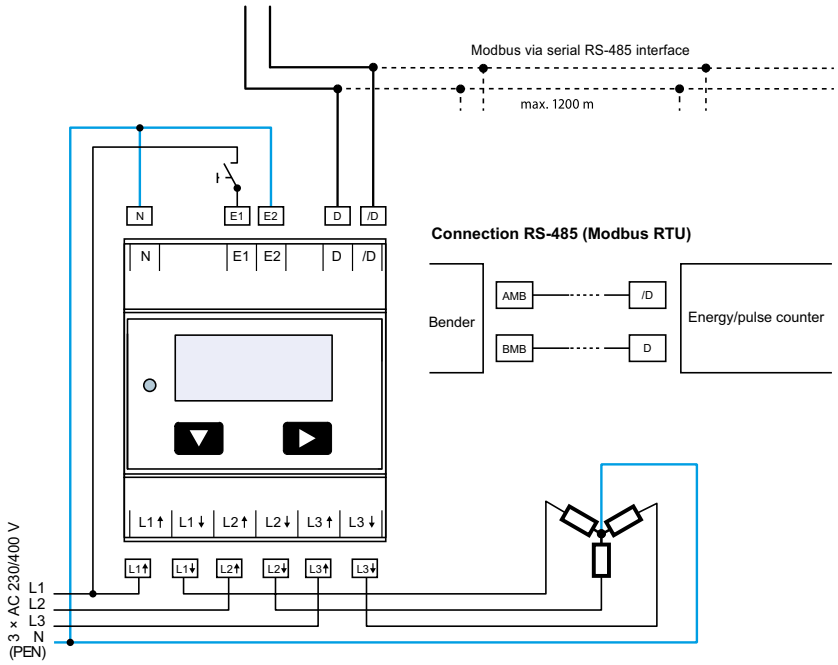

Connections E1 and E2

To switch between tariffs, connect to the control signal of the ripple control receiver.

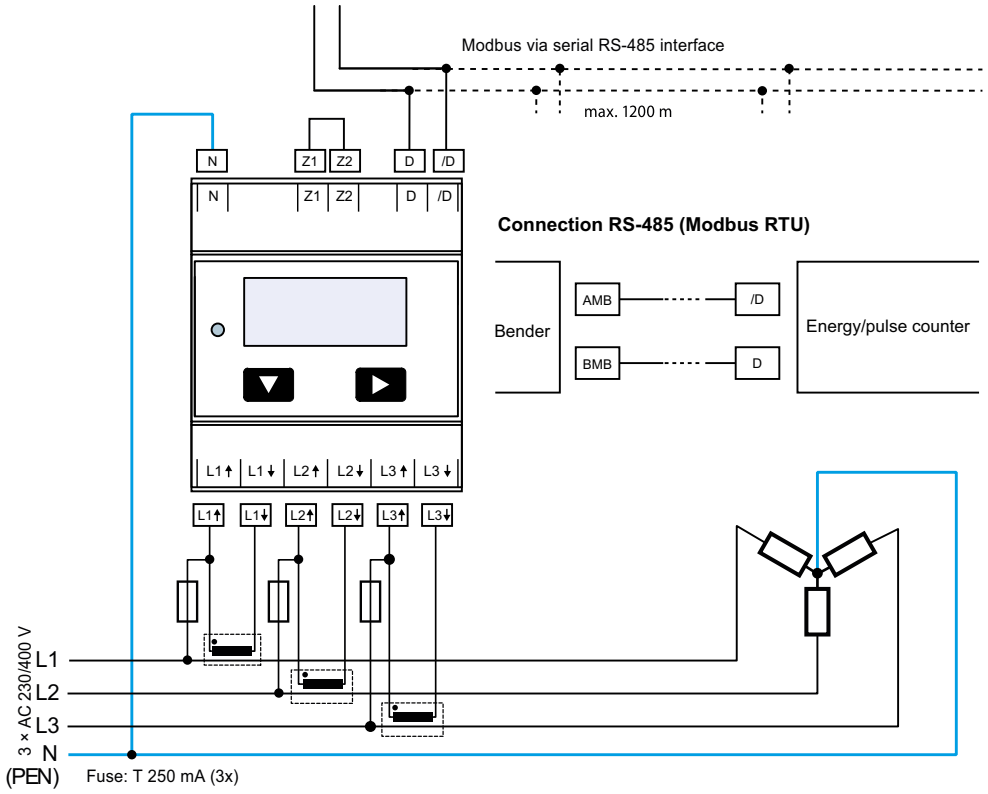

THE secondary current transformer connection on the network side has to be connected to the phase to be measured. For this reason the current transformer must not be earthed.

Device overview measuring and monitoring relays LINETRAXX®

							
		LINETRAXX® VME420	**LINETRAXX® VME421H**	**LINETRAXX® VMD258**	**LINETRAXX® ES258**	**LINETRAXX® VMD420**	**LINETRAXX® VMD421H**
Catalogue page		**286**	**289**	**292**	**295**	**296**	**299**
Special applications		–	–	Power plant	Energy backup for device series VMD258	–	–
Application	**Voltage monitoring**	✓	✓	✓	–	✓	✓
	Current monitoring	–	–	–	–	–	–
Voltage monitoring	**AC**	*U*<, *U*>	*U*<, *U*>	–	–	–	–
	3AC	–	–	*U*<, *U*>	–	*U*<, *U*>	*U*<, *U*>
	3(N)AC	–	–	–	–	*U*<, *U*>	*U*<, *U*>
	DC	*U*<, *U*>	*U*<, *U*>	–	–	–	–
Measuring range/ nominal system voltage U_n		AC/DC systems 0…300 V	**VME421H-D-1** AC/DC systems 9,6…150 V VMD421H-D-2 70…300 V	3AC 690/500/480/440/ 400/230/110/100 V	–	(L-N) 0…288 V (L-L) 0…500 V	(L-N) 0…288 V (L-L) 0…500 V
Frequency		*f*<, *f*>	*f*<, *f*>	–	–	*f*<, *f*>	*f*<, *f*>
Phase sequence		–	–	–	–	✓	✓
Phase failure		–	–	–	–	✓	✓
Asymmetry		–	–	–	–	✓	✓
Supply voltage U_s		external	system	system	–	external	system
Current monitoring	1 AC with U_s	–	–	–	–	–	–
	3 AC with U_s	–	–	–	–	–	–
Special function		–	–	–	–	–	–
Installation	**DIN rail**	✓	✓	✓	✓	✓	✓
	Screw mounting	✓	✓	✓	✓	✓	✓
Product details (Products on www.bender.de/en)							

							
LINETRAXX® VMD423/VMD423H	**LINETRAXX® VMD460-NA**	**LINETRAXX® VMD461**	**LINETRAXX® CME420**	**LINETRAXX® CMD420/CMD421**	**LINETRAXX® CMS460**	**LINETRAXX® GM420**	**RC48C**
302	**305**	**310**	**316**	**319**	**322**	**325**	**328**
Interface Protection System/Decoupling protection relay	Interface Protection System/Decoupling protection relay	Interface Protection System/Decoupling protection relay	–	–	–	Loop monitoring	Residual current/loop monitoring
✓	✓	✓	–	–	–	–	–
–	–	–	✓	✓	✓	–	✓
–	$U<, U<<, U>, U>>, U_{10min}>$	$U<, U<<, U<<<, U>, U>>, U>>>$	–	–	–	–	–
–	$U<, U<<, U>, U>>, U_{10min}>$	$U<, U<<, U<<<, U>, U>>, U>>>$	–	–	–	–	–
$U<, U>, U_{10min}>$	$U<, U<<, U>, U>>, U_{10min}>$	$U<, U<<, U<<<, U>, U>>, U>>>$	–	–	–	–	–
–	–	–	–	–	–	–	–
(L-N) 0…288 V (L-L) 0…500 V	(L-N) 0…300 V (L-L) 0…520 V	**VMD461** (L-N) AC 50…260 V (L-L) AC 87…450 V (DC+ / DC–) DC 50…450 V **VMD461 +CD440** (L-N) AC 250…690 V (L-L) AC 440…1200 V (DC+/DC-) DC 250…1200 V	–	–	–	–	–
$f<, f>$	$f<, f<<, f>, f>>$	$f<, f<<, f<<<, f>, f>>, f>>>$	–	–	–	–	–
✓	✓	✓	–	–	–	–	–
✓	✓	✓	–	–	–	–	–
✓	✓	✓	–	–	–	–	–
external (VMD423) system (VMD423H)	external	external	–	–	–	extern	extern
–	–	–	$I<, I>$	–	$I<, I>$	–	–
–	–	–	–	$I<, I>$	$I<, I>$	–	–
–	RS-485 interface, Islanding detection: -ROCOF (df/dt) -Vector shift	RS-485 interface, Islanding detection: -ROCOF (df/dt) -Vector shift	–	–	RS-485 interface	Monitoring of conductor loops for interruption	Monitoring of conductor loops for interruption and short circuit by using an termination device
✓	✓	✓	✓	✓	✓	✓	✓
✓	✓	✓	✓	✓	✓	✓	✓

LINETRAXX® VME420

Multi-functional monitoring relay for undervoltage, overvoltage and frequency monitoring in AC/DC systems with separate supply voltage

Typical applications

- Voltage and frequency monitoring of single-phase machines and electrical installations
- Earth fault monitoring in medium-voltage systems via voltage transformers
- Monitoring of battery systems
- Switching machinery and equipment on and off at a certain voltage level

Approvals

Device features

- Monitoring AC/DC systems for undervoltage, overvoltage and frequency in the voltage range of 0…300 V
- Various monitoring functions selectable *U* <, *U* >, *f* <, *f* >
- Start-up delay, response delay and delay on release
- Adjustable switching hysteresis
- r.m.s. value measurement (AC+DC)
- Digital measured value display via multi-functional LC display
- Preset function (automatic setting of basic parameters)
- LEDs: Power On, Alarm 1, Alarm 2
- Measured value memory for operating value
- Continuous self monitoring
- Internal test/reset button
- Two separate alarm relays (one changeover contact each)
- N/C or N/O operation and fault memory behaviour selectable
- Password protection for device setting
- Sealable transparent cover
- Two-module enclosure (36 mm)
- Push-wire terminal (two terminals per connection)
- RoHS compliant

Standards

The VME420 complies with the requirements of

- DIN EN 45545-2.

Further information

For further information refer to our product range on www.bender.de.

Ordering information

Type	Supply voltage [1] U_s	Art. No.	
		Screw-type terminal	Push-wire terminal
VME420-D-1	AC 16…72 V, 15…460 Hz / DC 9,6…94 V	B93010001	B73010001
VME420-D-2	AC 70…300 V, 15…460 Hz / DC 70…300 V	B93010002	B73010002

[1] Absolute values

Accessories

Description	Art. No.
Mounting clip for screw mounting (1 piece per device)	B98060008

Insulation coordination acc. to IEC 60664-1/IEC 60664-3

Rated insulation voltage	250 V
Rated impulse voltage/pollution degree	4 kV/3
Overvoltage category	III
Protective separation (reinforced insulation) between:	(A1, A2) -(U1/+, U2/-) -(11-12-14) -(21-22-24)

Supply voltage

VME420-D-1:

Supply voltage U_s	AC 16…72 V/DC 9.6…94 V
Frequency range U_s	15…460 Hz

VME420-D-2:

Supply voltage U_s	AC/DC 70…300 V
Frequency range U_s	15…460 Hz
Power consumption	≤ 4 VA

Measuring circuit

Measuring range (r.m.s. value)	AC/DC 0…300 V
Rated frequency f_n	DC, 15…460 Hz
Frequency display range	10…500 Hz

Response values

Undervoltage $U <$ (Alarm 2)	AC/DC 6…300 V
Overvoltage $U >$ (Alarm 1)	AC/DC 6…300 V
Resolution of setting U 6.0…49.9 V	0.1 V
Resolution of setting U 50…300 V	1 V

Preset function:

Undervoltage $U <= (0.85\ U_n)$:*	
for U_n = 230/120/60/24 V	196/102/51/20.4 V
Overvoltage $U >= (1.1\ U_n)$:*	
for U_n = 230/120/60/24 V	253/132/66/26.4 V
Relative uncertainty voltage at 50/60 Hz	±1.5 %, ±2 digits
Relative uncertainty, voltage in the range of 15…460 Hz	±3 %, ±2 digit
Hysteresis U	1…40 % (5 %)*
Underfrequency Hz <	10…500 Hz**
Overfrequency Hz >	10…500 Hz**
Resolution of setting f 10.0…99.9 Hz	0.1 Hz
Resolution of setting f 100…500 Hz	1 Hz

Preset function:

Underfrequency for f_n = 16,7/50/60/400 Hz	15,7/49/59/399 Hz
Overfrequency for f_n = 16,7/50/60/400 Hz	17,7/51/61/401 Hz
Hysteresis frequency Hys Hz	0.1…2 Hz (0.2 Hz)*
Relative uncertainty, frequency range 15…460 Hz	±0.2 %, ±1 digit

Time response

Start-up delay t	0…300 s (0 s)*
Response delay $t_{on1/2}$	0…300 s (0 s)*
Delay on release t_{off}	0…300 s (0.5 s)*
Resolution of setting t, $t_{on1/2}$, t_{off} (0…10 s)	0.1 s
Resolution of setting t, $t_{on1/2}$, t_{off} (10…99 s)	1 s
Resolution of setting t, $t_{on1/2}$, t_{off} (100…300 s)	10 s
Operating time, voltage t_{ae}	DC/AC 16.7 Hz: ≤ 130 ms, AC 42…460 Hz: ≤ 70 ms
Operating time frequency t_{ae}	AC 15…460 Hz: ≤ 310 ms
Response time t_{an}	$t_{an} = t_{ae} + t_{on1/2}$
Recovery time t_b	≤ 300 ms

Displays, memory

Display	LC display, multifunctional, not illuminated
Display range measured value	AC/DC 0…300 V
Operating uncertainty at 50/60 Hz	±1.5 %, ±2 digits
Operating uncertainty, voltage in the range of 15…460 Hz	±3 %, ±2 digits
Operating uncertainty, frequency in the range of 15…460 Hz	±0.2 %, ±1 digit
History memory (HiS) for the first alarm value	data record measured values
Password	off/0…999 (off)*
Fault memory (M) alarm relay	on/off/con (on)*

Switching elements

Number	2 x 1 changeover contacts (K1, K2)
Operating principle	N/C operation/N/O operation
	K2: Err, $U <$, $U >$, Hz <, Hz >, S.AL (undervoltage $U <$: N/C operation n.c.)*
	K1: Err, $U <$, $U >$, Hz <, Hz >, S.AL (overvoltage $U >$: N/O operation n.o.)*
Electrical endurance, number of cycles	10,000

Contact data acc. to IEC 60947-5-1

Utilisation category	AC-13	AC-14	DC-12	DC-12	DC-12
Rated operational voltage	230 V	230 V	24 V	110 V	220 V
Rated operational current	5 A	3 A	1 A	0.2 A	0.1 A
Minimum contact rating	1 mA at AC/DC ≥ 10 V				

Environment/EMC

EMC	IEC 61326-1
Operating temperature	-25…+55 °C

Classification of climatic conditions acc. to IEC 60721 (related to temperature and relative humidity)**:**

Stationary use (IEC 60721-3-3)	3K22
Transport (IEC 60721-3-2)	2K11
Long-term storage (IEC 60721-3-1)	1K22

Classification of mechanical conditions acc. to IEC 60721

Stationary use (IEC 60721-3-3)	3M11
Transport (IEC 60721-3-2)	2M4
Long-term storage (IEC 60721-3-1)	1M12

Connection

Connection type	screw-type terminal or push-wire terminal

Connection	**screw terminals**
Connection properties	
rigid	0.2…4 mm² (AWG 24- 12)
flexible	0.2…2.5 mm² (AWG 24-14)
Two conductors with the same cross section	
rigid/flexible	0.2…1.5 mm² (AWG 24-16)
Stripping length	8…9 mm
Tightening torque, terminal screws	0.5…0.6 Nm

Connection	**push-wire terminals**
Connection properties	
rigid	0.2…2.5 mm² (AWG 24-14)
flexible	
without ferrules	0.75…2.5 mm² (AWG 19-14)
with ferrules	0.2…1.5 mm² (AWG 24-16)
Stripping length	10 mm
Opening force	50 N
Test opening, diameter	2.1 mm

Other

Operating mode	continuous operation
Mounting	any position
Degree of protection, internal components (DIN EN 60529)	IP30
Degree of protection, terminals (DIN EN 60529	IP20
Enclosure material	polycarbonate
Screw mounting	2 x M4 with mounting clip
DIN rail mounting acc. to	IEC 60715
Flammability class	UL94 V-0
Documentation number	D00026
Weight	≤ 150 g

( )* = factory setting

** = The technical data applies to the operating range of the rated frequency 15…460 Hz only

Dimension diagram (dimensions in mm)

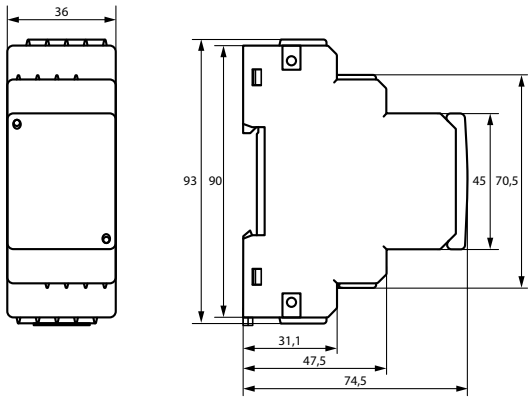

Wiring diagram

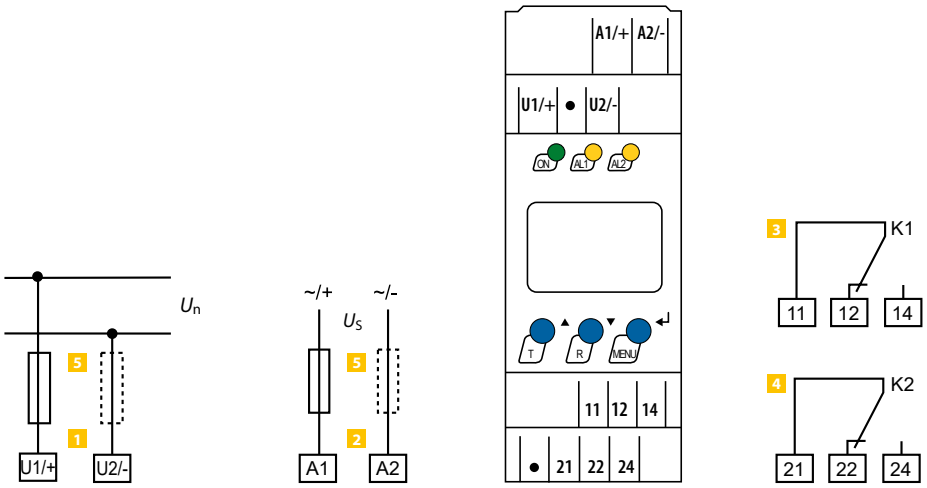

1	**U1/+, U2/-**	Connection to the system/load being monitored
2	**A1, A2**	Supply voltage U_S (see ordering information)
3	**11, 12, 14**	Alarm relay "K1": Configurable for *U*</*U*>/*f*</*f*>/ERROR
4	**21, 22, 24**	Alarm relay "K2": Configurable for *U*</*U*>/*f*</*f*>/ERROR

5 Line protection according to IEC 60364-4-43:
6 A fuse recommended. If being supplied from an IT system, both lines have to be protected by a fuse.

LINETRAXX® VME421H

Multi-functional monitoring relay for undervoltage, overvoltage and frequency monitoring in AC/DC systems without separate supply voltage

Typical applications

- Voltage and frequency monitoring of single-phase machines and electrical installations
- Earth fault monitoring in medium-voltage systems via voltage transformers
- Monitoring of battery systems
- Switching machinery and equipment on and off at a certain voltage level

Approvals

Device features

- Undervoltage and overvoltage monitoring of AC/DC systems in the frequency range DC/15…460 Hz
  device variant **-1**: 9,6…150 V
  device variant **-2**: 70…300 V
- Preset function: Automatic response value setting for undervoltage and overvoltage, < *U* and > *U* as well as for underfrequency and overfrequency < *f* and > *f*
- Voltage and frequency monitoring with window discriminator function, < *U* and > *U* as well as < *f* and > *f*
- Without external supply voltage
- Integrated energy backup
- Indication of the system frequency *f*
- Starting delay, response delay and release delay
- Adjustable switching hysteresis for *U* and *f*
- r.m.s. value measurement AC + DC
- Measured value display via multi-functional LC display
- Alarm indication via LEDs (AL1, AL2) and changeover contacts (K1, K2)
- N/C operation or N/O operation selectable
- Password protection against unauthorised parameter changing
- The fault memory can be activated or deactivated. In the "con" mode, all alarm parameters remain stored on failure of the nominal voltage being monitored ($U_n = U_S$)
- Start-up of the device with or without simulated alarm message
- Frequency alarm behaviour in case of measuring voltage failure can be parameterised

Further information

For further information refer to our product range on www.bender.de.

Ordering information

Type	Nominal system voltage [1] U_n	Art. No.	
		Screw-type terminal	Push-wire terminal
VME421H-D-1	AC 9.6…150 V, 15…460 Hz / DC 9.6…150 V	B93010003	B73010003
VME421H-D-2	AC 70…300 V, 15…460 Hz / DC 70…300 V	B93010004	B73010004

[1] Absolute values

Accessories

Description	Art. No.
Mounting clip for screw mounting (1 piece per device)	B 9806 0008

Insulation coordination acc. to IEC 60664-1/IEC 60664-3

Rated insulation voltage	250 V
Rated impulse voltage/overvoltage category	4 kV/III
Pollution degree	3
Protective separation (reinforced insulation) between:	(U1/+, U2/-) -(11-12-14) -(21-22-24)
Voltage test acc. to IEC 61010-1	2.21 kV

Supply voltage

VME421H-D-1:	
Supply voltage U_s	none (internally supplied by U_n: 9,6…150 V)
VME421H-D-2:	
Supply voltage U_s	none (internally supplied by U_n: 70…300 V)
Power consumption	≤ 6 VA

Measuring circuit

Measuring range (rms value) (VME421H-D-1)	AC/DC 0…150 V
Measuring range (rms value) (VME421H-D-2)	AC/DC 0…300 V
Rated frequency f_n	DC, 15…460 Hz
Frequency display range	10…500 Hz**

Response values

VME421H-D-1:	
Undervoltage U < (Alarm 2)	AC/DC 9.6…150 V
Overvoltage U > (Alarm 1)	AC/DC 9.6…150 V
Preset function:	
Undervoltage U < (0.85 U_n)* for U_n = 120/60/24 V	102/51/20.4 V
Overvoltage U > (1.1 U_n)* for U_n = 120/60/24 V	132/66/26.4 V
Resolution of setting U 9.6…49.9 V	0.1 V
Resolution of setting U 50…150 V	1 V
VME421H-D-2:	
Undervoltage U < (ALARM 2)	AC/DC 70…300 V
Overvoltage U > (ALARM 1)	AC/DC 70…300 V
Resolution of setting U 70…300 V	1 V
Preset function:	
Undervoltage U < (0.85 U_n)* for U_n = 230/120 V	196/102 V
Overvoltage U > (1.1 U_n)* for U_n = 230/120 V	253/132 V
VME421H…:	
Relative uncertainty voltage at 50/60 Hz	±1.5 %, ±2 digits
Relative uncertainty voltage in the range 15…460 Hz	±3 %, ±2 digit
Hysteresis U	1…40 % (5 %)*
Underfrequency Hz <	10…500 Hz**
Overfrequency Hz >	10…500 Hz**
Resolution of setting f 10.0…99.9 Hz	0.1 Hz
Resolution of setting f 100…500 Hz	1 Hz
Preset function:	
Underfrequency for f_n = 16.7 Hz / 50 Hz / 60 Hz / 400 Hz	15.7 Hz / 49 Hz / 59 Hz / 399 Hz
Overfrequency for f_n = 16.7 Hz / 50 Hz / 60 Hz / 400 Hz	17.7 Hz / 51 Hz / 61 Hz / 401 Hz
Hysteresis frequency Hys Hz	0.1…2 Hz (0.2 Hz)*
Relative uncertainty, frequency in the range of 15…460 Hz	±0.2 %, ±1 digit

Time response

Start-up delay t	0…300 s (0 s)*
Response delay $t_{on1/2}$	0…300 s (0 s)*
Delay on release t_{off}	0…300 s (0.5 s)*
Resolution of setting t, $t_{on1/2}$, t_{off} (0…10 s)	0.1 s
Resolution of setting t, $t_{on1/2}$, t_{off} (10…99 s)	1 s
Resolution of setting t, $t_{on1/2}$, t_{off} (100…300 s)	10 s
Operating time, voltage t_{ae}	DC/AC 16.7 Hz: ≤ 130 ms, AC 42…460 Hz: ≤ 70 ms
Operating time frequency t_{ae}	AC 15…460 Hz: ≤ 310 ms
Response time t_{an}	$t_{an} = t_{ae} + t_{on1/2}$
Discharging time energy backup on power failure (VME421H-D-**1**)	3 s
Discharging time energy backup on power failure (VME421H-D-**1**)	2.5 s at f_n < 42 Hz
Discharging time energy backup (VME421H-D-**2**)	≥ 4 s at DC 70 V ≥ 6 s at DC 80 V/AC 70 V
Charging time energy backup (VME421H-D-**1**)	60 s
Charging time energy backup (VME421H-D-**2**)	120 s
Recovery time t_b	≤ 300 ms

Displays, memory

Display	LC display, multifunctional, not illuminated
Display range measured value (VME421H-D-**1**)	AC/DC 0…150 V
Display range measured value (VME421H-D-**2**)	AC/DC 0…300 V
Operating uncertainty at 50/60 Hz	±1.5 %, ±2 digits
Operating uncertainty voltage in the range of 15…460 Hz	±3 %, ±2 digits
Operating uncertainty in the frequency range 15…460 Hz	±0.2 %, ±1 digit
History memory (HiS) for the first alarm value	data record measured values
Password	off/0…999 (off)*
Fault memory (M) alarm relay	on/off/con (on)*

Switching elements

Number	2 x 1 changeover contacts (K1, K2)
Operating principle	N/C operation/N/O operation K2: Err, U <, U >, Hz <, Hz >, S.AL (undervoltage U <: N/C operation n.c.)* K1: Err, U <, U >, Hz <, Hz >, S.AL (overvoltage U >: N/O operation n.o.)*
Electrical endurance, number of cycles	10,000

Contact data acc. to IEC 60947-5-1

Utilisation category	AC-13	AC-14	DC-12	DC-12	DC-12
Rated operational voltage	230 V	230 V	24 V	110 V	220 V
Rated operational current	5 A	3 A	1 A	0.2 A	0.1 A
Minimum contact rating	1 mA at AC/DC ≥ 10 V				

Environment/EMC

EMC	IEC 61326-1
Operating temperature	-25…+55 °C

Classification of climatic conditions acc. to IEC 60721 (related to temperature and relative humidity)**:**

Stationary use (IEC 60721-3-3)	3K22
Transport (IEC 60721-3-2)	2K11
Long-term storage (IEC 60721-3-1)	1K22

Classification of mechanical conditions acc. to IEC 60721

Stationary use (IEC 60721-3-3)	3M11
Transport (IEC 60721-3-2)	2M4
Long-term storage (IEC 60721-3-1)	1M12

Connection

Connection type	screw-type terminal or push-wire terminal
Connection	**screw terminals**
Connection properties	
rigid	0.2…4 mm² (AWG 24- 12)
flexible	0.2…2.5 mm² (AWG 24-14)
Two conductors with the same cross section	
rigid/flexible	0.2…1.5 mm² (AWG 24-16)
Stripping length	8…9 mm
Tightening torque, terminal screws	0.5…0.6 Nm
Connection	**push-wire terminals**
Connection properties	
rigid	0.2…2.5 mm² (AWG 24-14)
flexible	
without ferrules	0.75…2.5 mm² (AWG 19-14)
with ferrules	0.2…1.5 mm² (AWG 24-16)
Stripping length	10 mm
Opening force	50 N
Test opening, diameter	2.1 mm

Other

Operating mode	continuous operation
Mounting	any position
Degree of protection, internal components (DIN EN 60529)	IP30
Degree of protection, terminals (DIN EN 60529	IP20
Enclosure material	polycarbonate
Screw mounting	2 x M4 with mounting clip
DIN rail mounting acc. to	IEC 60715
Flammability class	UL94 V-0
Documentation number	D00141
Weight	≤ 240 g

( )* = factory setting

** = The technical data applies to the operating range of the rated frequency 15…460 Hz only.

Dimension diagram (dimensions in mm)

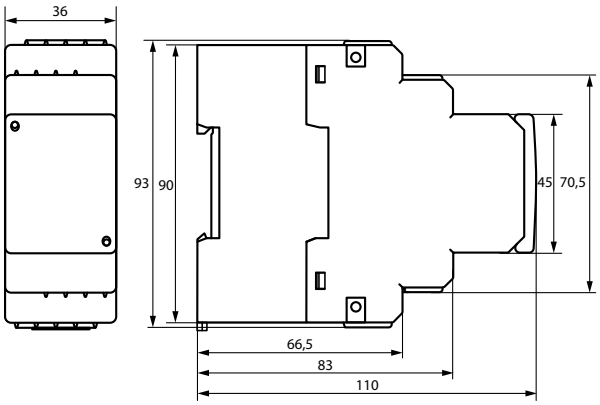

Wiring diagram

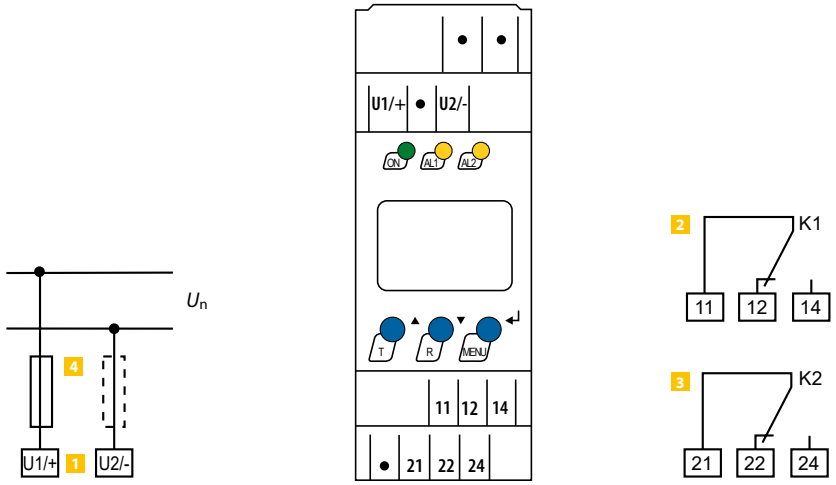

1	**U1/+, U2/-**	Connection to the system/load being monitored
2	**11, 12, 14**	Alarm relay "K1": Configurable for *U*</*U*>/*f*</*f*>/ERROR
3	**21, 22, 24**	Alarm relay "K2": Configurable for *U*</*U*>/*f*</*f*>/ERROR

4 Line protection according to IEC 60364-4-43:
6 A fuse recommended. If being supplied from an IT system, both lines have to be protected by a fuse.

LINETRAXX® VMD258

Undervoltage/overvoltage relay for monitoring three-phase AC systems (window function) for power plant applications

Typical applications

- Monitoring of the power supply of machines and electrical installations
- Monitoring of loads
- Switching electrical systems on and off at a certain voltage level
- Monitoring of stand-by and emergency supply systems

Approvals

Device features

- High availability due to purely analogue technology
- Undervoltage and overvoltage monitoring for 3AC systems
- No separate supply voltage required
- Separate alarm relays for undervoltage and overvoltage with two potential-free changeover contacts
- Adjustable response value: 0.7…0.95 x U_n / 1.05…1.3 x U_n
- Nominal system voltages: 3AC 690/500/480/440/400/230/110/100 V
- Adjustable response delay: 0…5 s
- LEDs for operation, overvoltage, undervoltage

Standards

The LINETRAXX® VMD258 series complies with the requirements of the device standards:

- DIN EN 60255-1 VDE 0435-300
  (Measuring relays and protection equipment - Part 1: Common requirements (IEC 60255-1:2009)
- IEC 60255-127
  Measuring relays and protection equipment - Part 127:
  Functional requirements for over/under voltage protection.

Further information

For further information refer to our product range on www.bender.de.

Ordering details

Type	Connection	Art. No.
VMD258 3AC 100 V	3AC, 100 V	B93010060
VMD258 3AC 110 V	3AC, 110 V	B93010061
VMD258 3AC 230 V	3AC, 230 V	B93010062
VMD258 3AC 400 V	3AC, 400 V	B93010063
VMD258 3AC 440 V	3AC, 440 V	B93010064
VMD258 3AC 480 V	3AC, 480 V	B93010065
VMD258 3AC 500 V	3AC, 500 V	B93010066
VMD258 3AC 690 V	3AC, 690 V	B93010067

Accessories

Description	Art. No.
Additional mounting clips (screw mounting)	B98060008

Suitable system components

Description	Type	Art. No.	Page
Energy backup	ES258	B93010068	**299**

Insulation coordination acc. to DIN EN 60255-27

Supply voltage U_S AC (V)	690	480/500	400/440	230	100/110
Rated voltage AC (V)	1000	1000	600	300	150
Rated impulse voltage (kV)	12	12	8	6	4
Pollution degree					3
Overvoltage category					III

Voltage ranges

Frequency range of U_S							45…66 Hz	
Operating range							0.5…1.3 x U_S	
Short-time overload capability							1.5 x U_S < 1 s	
Power consumption							≤ 10 VA	
Nominal supply voltage U_S 3AC (V)	690	500	480	440	400	230	110	100
Power consumption at 50 Hz, 1.3 x U_S (VA)	19	15	12	14	9	16	15	10
Power consumption at 60 Hz, 1.3 x U_S (VA)	11	9	8	8	6	9	9	7

Measuring circuit

Nominal system voltage U_n	3AC 690/500/480/440/400/230/110/100 V
Setting range	0.5…1.3 x U_n
Short-time overload capability	1.5 x U_n < 1 s
Frequency range of U_n	45…66 Hz
Max. permissible measuring voltage	1.3 x U_n
Response value U_n adjustable	>U, <U

Response values

Undervoltage <*U* (alarm)	0.7…0.95 x U_n
Overvoltage >*U* (alarm)	1.05…1.3 x U_n
Relative uncertainty at the setting limits	45…66 Hz: ±3 % 47.5…63 Hz: ±2 %
Hysteresis	< 3 %
Repetition accuracy	±1 %
LED ON	(green)
Alarm for <*U*	LED (yellow)
Alarm for >*U*	LED (yellow)

Time response

Start-up delay *t*	500 ms ±20 %
Response delay t_{on}	0…5 s ±10 %
Delay on release t_{off}	100 ms ±20 %
Operating time t_{ae} at overvoltage	60 ms* ±20 %
Operating time t_{ae} at undervoltage	100 ms** ±20 %
Response time t_{an}	$t_{an} = t_{ae} + t_{on}$
Long-term influence	-10 %
Overshooting time t_{ov}	< 60 ms

Connection for external energy storage device

U_{min}	DC 24 V
U_{max}	DC 68 V
U_{typ} at 1.0 x U_n	42…47 V ±15 %
Short-circuit proof (Z+, Z-)	short time yes

Switching elements

Number of switching elements	2 x 2 changeover contacts
Operating mode	N/C operation (undervoltage) N/O operation (overvoltage)
Electrical endurance, number of cycles	10000

Contact data acc. to IEC 60947-5-1

Rated operational voltage	230 V/230 V/ 220/110/24 V
Utilisation category	AC-13/AC-14/DC 12/DC 12/DC 12
Rated operational current	5 A/3 A/ 0,1/0,2/1 A
Minimum current	1 mA at AC/DC > 10 V

Environment/EMC

EMC immunity	acc. to IEC 60255-26
EMC emission	acc. to IEC 60255-25
Operating temperature	-20…+70 °C

Climatic class acc. to DIN IEC 60721-3-3 (related to temperature and relative humidity)

Stationary use, except condensation	3K22
Transport	2K11
Long-term storage	1K22

Classification of mechanical conditions acc. to IEC 60721

Stationary use	3M11
Transport	2M4
Long-term storage	1M12

Requirements acc. to IEC 60255	Class 2

Connection

Connection	screw terminals
Connection properties	
rigid/flexible	0.2…2.5 mm²
flexible with ferrule	0.25…2.5 mm²
without/with plastic sleeve	0.25…2.5 mm²
Conductor sizes (AWG)	24-13
Tightening torque	0.5…0.6 Nm
Current through L1L1, L2L2 or L3L3	each max. 3 A

Other

Operating mode	continuous operation
Position	any position
Degree of protection, internal components (DIN EN 60529)	IP30
Degree of protection, terminals (DIN EN 60529)	IP20
Enclosure material	polycarbonate
Flammability class	UL94 V-0
DIN rail mounting acc. to	IEC 60715
Screw mounting	4 x M4
Weight	825 g

* Operating time t_{ae} **overvoltage** increase from 100 % to 130 %, switching threshold at 105 %

** Operating time t_{ae} **undervoltage** decrease from 100 % to 0 %, switching threshold at 95 %

Dimension diagram (dimensions in mm)

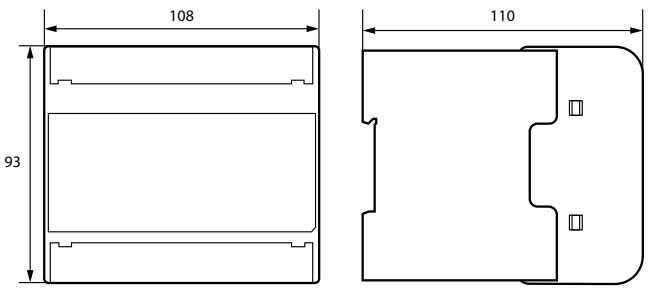

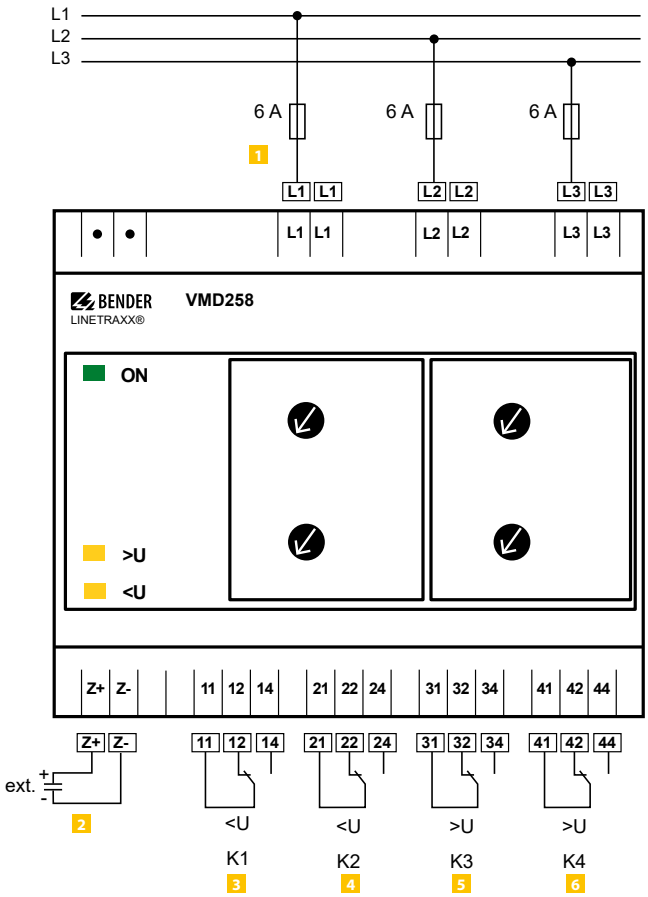

1	**L1, L2, L3**	Connections to the system to be monitored	4	**21 22 24**	Relay 2
2	**Z+ Z–**	Connection to ES258 for a back-up time > 5 s	5	**31 32 34**	Relay 3
3	**11 12 14**	Relay 1	6	**41 42 44**	Relay 4

ES258

Energy backup for undervoltage/overvoltage relays

Typical applications

- Supplementary device for the undervoltage/overvoltage relay VMD258.

Further information

For further information refer to our product range on www.bender.de.

Approvals

Ordering information

Type	Art. No.
ES258	B93010068

Technical data

Insulation coordination according to IEC 60664-1	
Rated insulation voltage	DC 100 V
Rated impulse voltage/pollution degree	800 V/3
Overvoltage category	II
Output Z1/Z2	
Supply voltage	DC 41…47 V (±30 %)
Storage capacity to supply the undervoltage and overvoltage relays	min. 5 s (±0.5 s)
Recovery time	≤ 60 s
Internal fuse, triggered in case of incorrect connection	yes
Environment/EMC	
EMC immunity	acc. to IEC 61000-6-2
EMC emission	acc. to IEC 61000-6-4
Connection	
Connection	screw -type terminal
Connection properties	
single wire	2 x (0.5…4) mm²
flexible with end ferrule	2 x (0.5…2.5) mm²
Other	
Operating mode	continuous operation
Mounting	any position
DIN rail mounting acc. to	IEC 60715
Flammability class	UL94V-0
Documentation number	D00086
Weight	≤ 160 g

Dimension diagram (dimensions in mm)

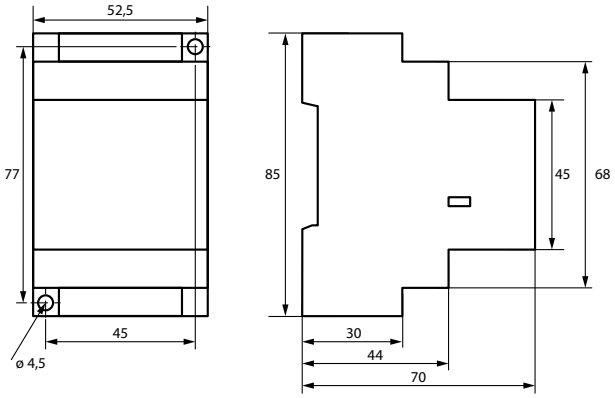

Wiring diagram

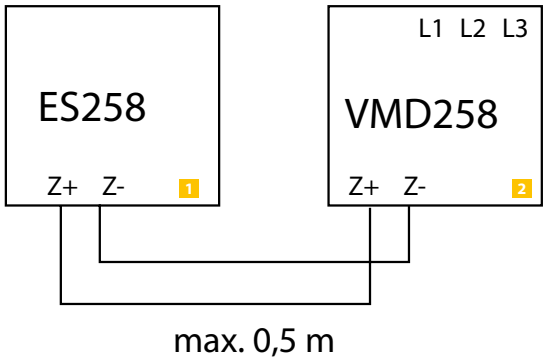

1 Energy backup

2 Undervoltage/overvoltage relay

LINETRAXX® VMD420

Multi-functional voltage relay for 3(N)AC systems, frequency/overvoltage/undervoltage, phase, phase failure, asymmetry

Typical applications

- Monitoring of voltage-sensitive machines and electrical installations
- Switching machinery and equipment on and off at a certain voltage level
- Monitoring of stand-by and emergency supply systems
- Supply voltage monitoring of portable loads
- Protection of three-phase motors against phase failure and phase open-circuit
- Transformer protection, asymmetrical load can be recognised

Approvals

Device features

- Undervoltage, overvoltage and frequency monitoring in 3(N)AC systems 0…500 V
- Asymmetry, phase failure and phase sequence monitoring
- Various monitoring functions selectable *U* <, *U* >, *f* <, *f* >
- Start-up delay, response delay and delay on release
- Adjustable switching hysteresis
- rms value measurement (AC+DC)
- Digital measured value display via multi-functional LC display
- Preset function (automatic setting of basic parameters)
- LEDs: Power On, Alarm 1, Alarm 2
- Measured value memory for operating value
- Continuous self monitoring
- Internal test/reset button
- Two separate alarm relays (one changeover contact each)
- N/C or N/O operation and fault memory behaviour selectable
- Password protection for device setting
- Sealable transparent cover
- Two-module enclosure (36 mm)
- Push-wire terminal (two terminals per connection)
- RoHS compliant

Standards

The VMD420 complies with the requirements of

- DIN EN 45545-2.

Further information

For further information refer to our product range on www.bender.de.

Ordering information

Type	Supply voltage [1] U_s	Art. No.	
		Screw-type terminal	Push-wire terminal
VMD420-D-1	AC 16…72 V, 15…460 Hz / DC 9,6…94 V	B93010005	B73010005
VMD420-D-2	AC/DC 70…300 V, 15…460 Hz	B93010006	B73010006

[1] Absolute values

Accessories

Description	Art. No.
Mounting clip for screw mounting (1 piece per device)	B98060008

Insulation coordination acc. to IEC 60664-1/IEC 60664-3

Rated insulation voltage	400 V
Rated impulse voltage/pollution degree	4 kV/III
Protective separation (reinforced insulation) between	(A1, A2) -(N, L1, L2, L3) -(11, 12, 14) -(21, 22, 24)
Voltage test acc. to IEC 61010-1:	
(N, L1, L2, L3) -(A1, A2), (11, 12, 14)	3.32 kV
(N, L1, L2, L3) -(21, 22, 24)	2.21 kV
(A1, A2) -(11, 12, 14) -(21, 22, 24)	2.21 kV

Supply voltage

VMD420-D-1:

Supply voltage U_s	AC 16…72 V/DC 9.6…94 V
Frequency range U_s	15…460 Hz

VMD420-D-2:

Supply voltage U_s	AC/DC 70…300 V
Frequency range U_s	15…460 Hz
Power consumption	≤ 4 VA

Measuring circuit

Measuring range (rms value) (L-N)	AC 0…288 V
Measuring range (rms value) (L-L)	AC 0…500 V
Input impedance (burden) L1-N, L2-N, L3-N	1 MΩ
Input impedance (burden) N	n.a.
Rated frequency f_n	15…460 Hz
Frequency display range	10…500 Hz

Response values

Type of distribution system	3(N)AC/3AC (3AC)*
Undervoltage *U* < (Alarm 2) (measurement method: 3Ph/3n)	AC 6…500/6…288 V
Overvoltage *U* > (Alarm 1) (measurement method: 3Ph/3n)	AC 6…500/6…288 V
Resolution of setting *U*	1 V
Preset function for 3AC measurement:	
Undervoltage U < (0.85 Un)* for Un = 400/208 V	340/177 V
Overvoltage U > (1.1 Un)* for Un = 400/208 V	440/229 V
Preset function for 3(N)AC measurement:	
Undervoltage *U* < (0.85 U_n)* for U_n = 230/120 V	196/102 V
Overvoltage *U* > (1.1 U_n)* for U_n = 230/120 V	253/132 V
Asymmetry	5…30 % (30 %)*
Phase failure	by setting the asymmetry
Phase sequence	clockwise/anticlockwise rotation (off)*
Relative uncertainty, voltage at 50/60 Hz	±1.5 %, ±2 digits
Relative uncertainty, voltage in the range 15…460 Hz	±3 %, ±2 digits
Hysteresis *U*	1…40 % (5 %)*
Underfrequency Hz <	10…500 Hz**
Overfrequency Hz >	10…500 Hz**
Resolution of setting *f* (10.0…99.9 Hz)	0.1 Hz
Resolution of setting *f* (100…500 Hz)	1 Hz

Preset function:

Underfrequency for f_n = 16,7/50/60/400 Hz	15.7/49/59/399 Hz
Overfrequency for f_n = 16,7/50/60/400 Hz	17.7/51/61/401 Hz
Hysteresis, frequency Hys Hz	0.1…2 Hz (0.2 Hz)*
Relative uncertainty, frequency range 15…460 Hz	±0.2 %, ±1 digit

Specified time

Start-up delay *t*	0…300 s (0 s)*
Response delay $t_{on1/2}$	0…300 s (0 s)*
Delay on release t_{off}	0…300 s (0.5 s)*
Resolution of setting *t*, $t_{on1/2}$, t_{off} (0…10 s)	0.1 s
Resolution of setting *t*, $t_{on1/2}$, t_{off} (10…99 s)	1 s
Resolution of setting *t*, $t_{on1/2}$, t_{off} (100…300 s)	10 s
Operating time, voltage t_{ae}	≤ 140 ms
Operating time, frequency t_{ae}	≤ 335 ms
Response time t_{an}	$t_{an} = t_{ae} + t_{on1/2}$
Recovery time t_b	≤ 300 ms

Displays, memory

Display	LC display, multifunctional, not illuminated
Display range measured value	AC/DC 0…500 V
Operating uncertainty, voltage at 50 Hz/60 Hz	±1.5 %, 2 digits
Operating uncertainty voltage in the range of 15…460 Hz	±3 %, ±2 digits
Operating uncertainty, frequency in the range of 15…460 Hz	±0.2 %, ±1 digit
History memory (HiS) for the first alarm value	data record measured values
Password	off/0…999 (off/ 0)*
Fault memory (M) alarm relay	on/off/con (on)*

Switching elements

Number	2 x 1 changeover contacts (K1, K2)
Operating principle	N/C operation n.c. or N/O operation n.o.
	K2: Err, *U* <, *U* >, Asy, Hz <, Hz >, PHS, S.AL (undervoltage *U* <, asymmetry Asy, N/C operation n.c.)*
	K1: Err, *U* <, *U* >, Asy, Hz <, Hz >, PHS, S.AL (overvoltage *U* >, asymmetry Asy, N/O operation n.o.)*
Electrical endurance, number of cycles	10,000

Contact data acc. to IEC 60947-5-1:

Utilisation category	AC-13	AC-14	DC-12	DC-12	DC-12
Rated operational voltage	230 V	230 V	24 V	110 V	220 V
Rated operational current	5 A	3 A	1 A	0.2 A	0.1 A
Minimum contact load (relay manufacturer's reference)			1 mA at AC/DC ≥ 10 V		

Environment/EMC

EMC	EN 61326-1

Ambient temperatures:

Operation	-25…+55 °C
Transport	-25…+70 °C
Storage	-25…+55 °C

Classification of climatic conditions acc. to IEC 60721 (related to temperature and relative humidity)**:**

Stationary use (IEC 60721-3-3)	3K22
Transport (IEC 60721-3-2)	2K11
Long-term storage (IEC 60721-3-1)	1K22

Classification of mechanical conditions acc. to IEC 60721

Stationary use (IEC 60721-3-3)	3M11
Transport (IEC 60721-3-2)	2M4
Long-term storage (IEC 60721-3-1)	1M12

Option „W" data different from the standard version

Classification of climatic conditions acc. to IEC 60721:	
Stationary use (IEC 60721-3-3)	3K23 (condensation and formation of ice is possible)
Classification of mechanical conditions acc. to IEC 60721:	
Stationary use (IEC 60721-3-3)	3M12

Connection

Connection type	screw-type terminal or push-wire terminal

Connection	**screw terminals**
Connection properties	
rigid	0.2…4 mm² (AWG 24- 12)
flexible	0.2…2.5 mm² (AWG 24-14)
Two conductors with the same cross section	
rigid/flexible	0.2…1.5 mm² (AWG 24-16)
Stripping length	8…9 mm
Tightening torque, terminal screws	0.5…0.6 Nm

Connection	**push-wire terminals**
Connection properties	
rigid	0.2…2.5 mm² (AWG 24-14)
flexible	
without ferrules	0.75…2.5 mm² (AWG 19-14)
with ferrules	0.2…1.5 mm² (AWG 24-16)
Stripping length	10 mm
Opening force	50 N
Test opening, diameter	2.1 mm

Other

Operating mode	continuous operation
Mounting	any position
Degree of protection, internal components (DIN EN 60529)	IP30
Degree of protection, terminals (DIN EN 60529	IP20
Enclosure material	polycarbonate
Flammability class	UL94 V-0
DIN rail mounting acc. to	IEC 60715
Screw mounting	2 x M4 with mounting clip
Documentation number	D00137
Weight	≤ 150 g

( )* = factory setting

** = The technical data can only be ensured in the operating range of the nominal frequency 15…460 Hz.

Dimension diagram (dimensions in mm)

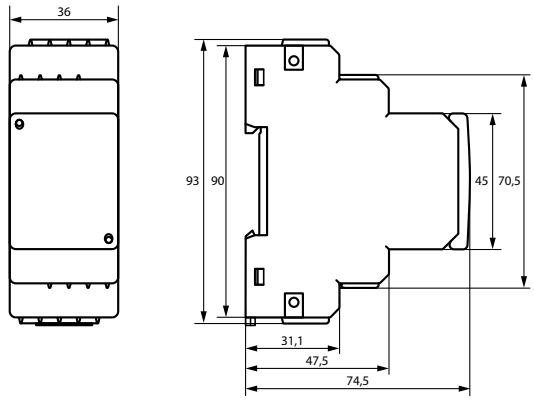

Wiring diagram

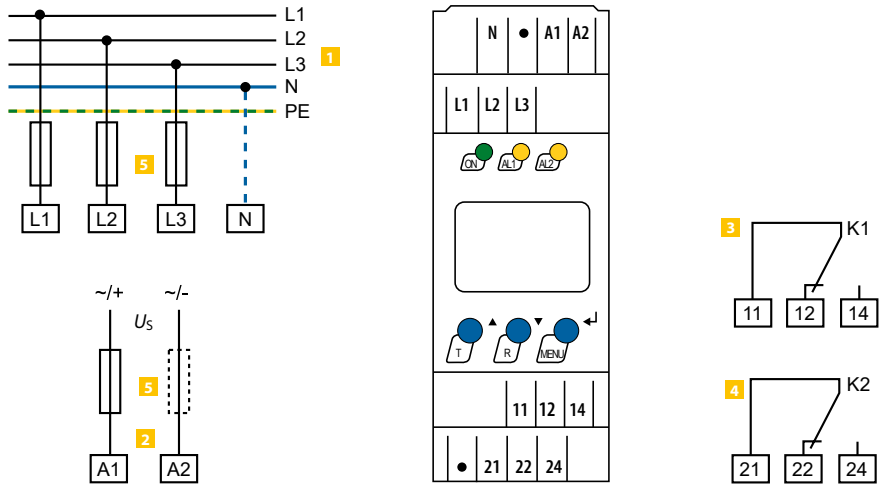

1	**L1, L2, L3, (N)**	Connection to the system/load to be monitored
2	**A1, A2**	Supply voltage U_S (see ordering information)
3	**11, 12, 14**	Alarm relay "K1": Configurable for *U*</*U*>/*f*</*f*>/Asy/PHS/ERROR
4	**21, 22, 24**	Alarm relay "K2": Configurable for *U*</*U*>/*f*</*f*>/Asy/PHS/ERROR
5	Line protection according to IEC 60364-4-43: 6 A fuse recommended. If being supplied from an IT system, both lines have to be protected by a fuse.	

LINETRAXX® VMD421H

Multi-functional voltage relay for 3(N)AC systems, frequency/overvoltage/undervoltage, phase, phase failure, asymmetry

Typical applications

- Monitoring of voltage-sensitive machines and electrical installations
- Switching machinery and equipment on and off at a certain voltage level
- Monitoring of stand-by and emergency supply systems
- Supply voltage monitoring of portable loads
- Protection of three-phase motors against phase failure and phase open-circuit
- Transformer protection, asymmetrical load can be recognised

Approvals

Device features

- Undervoltage, overvoltage and frequency monitoring in 3(N)AC systems 70…500/288 V
- Without external supply voltage
- Integrated energy backup
- Asymmetry, phase failure and phase sequence monitoring
- Various monitoring functions selectable *U* <, *U* >, *f* <, *f* >
- Start-up delay, response delay, delay on release
- Adjustable switching hysteresis
- rms value measurement (AC+DC)
- Digital measured value display via multi-functional LC display
- Preset function (automatic setting of basic parameters)
- LEDs: Power On, Alarm 1, Alarm 2
- Measured value memory for operating value
- Continuous self monitoring
- Internal test/reset button
- Two separate alarm relays (one changeover contact each)
- N/C or N/O operation and fault memory behaviour selectable
- Password protection for device setting
- Sealable transparent cover
- Two-module enclosure (36 mm)
- Push-wire terminal (two terminals per connection)
- RoHS compliant

Standards

The LINETRAXX® VMD421H series complies with the requirements of the device standards:

- IEC 61010-1

Further information

For further information refer to our product range on www.bender.de.

Ordering information

Type	Nominal system voltage [1] U_n	Art. No.	
		Screw-type terminal	Push-wire terminal
VMD421H-D-3	3(N)AC 70…500 V, 15…460 Hz	B93010007	B73010007

[1] Absolute values

Accessories

Description	Art. No.
Mounting clip for screw mounting (1 piece per device)	B98060008

Insulation coordination acc. to IEC 60664-1/IEC 60664-3

Rated insulation voltage	400 V
Rated impulse voltage/Pollution degree	4 kV/III
Protective separation (reinforced insulation) between	(N, L1, L2, L3) - (11, 12, 14) - (21, 22, 24)
Voltage test acc. to IEC 61010-1:	
(N, L1, L2, L3) - (11, 12, 14)	3.32 kV
(N, L1, L2, L3) - (21, 22, 24)	2.21 kV

Supply voltage

Supply voltage U_S	none (internally supplied by U_n)
Power consumption	≤ 6 VA

Measuring circuit

Measuring range (r.m.s. value) (L-N)	AC 0…288 V
Measuring range (r.m.s. value) (L-L)	AC 0…500 V
Rated frequency f_n	15…460 Hz
Frequency display range	10…500 Hz

Response values

Type of distribution system	3(N)AC/3AC (3AC)*
Undervoltage < *U* (Alarm 2) (measurement method: 3Ph/3n)	AC 70…500/70…288 V
Overvoltage > *U* (Alarm 1) (measurement method: 3Ph/3n)	AC 70…500 V/70…288 V
Resolution of setting *U*	1 V
Preset function for 3AC measurement:	
Undervoltage < *U* (0.85 U_n)* for U_n = 400/208 V	340/177 V
Overvoltage > *U* (1.1 U_n)* for U_n = 400/208 V	440/229 V
Preset function for 3(N)AC measurement:	
Undervoltage < *U* (0.85 U_n)* for U_n = 230/120 V	196/102 V
Overvoltage > *U* (1.1 U_n)* for U_n = 230/120 V	253/132 V
Hysteresis *U*	1…40 % (5 %)*
Asymmetry	5…30 % (30 %)*
Phase failure	by setting the asymmetry
Phase sequence	clockwise/anticlockwise rotation (off)*
Relative uncertainty, voltage at 50/60 Hz	± 1.5 %, ± 2 digits
Relative uncertainty voltage in the range 15…460 Hz	±3 %, ±2 digits
Underfrequency < Hz	10…500 Hz**
Overfrequency > Hz	10…500 Hz**
Resolution of setting *f* 10.0…99.9 Hz	0.1 Hz
Resolution of setting *f* 100…500 Hz	1 Hz
By preset function :	
Underfrequency for f_n = 16.7/50/60/400 Hz	15.7/49/59/399 Hz
Overfrequency for f_n = 16.7/50/60/400 Hz	17.7/51/61/401 Hz
Hysteresis frequency Hys Hz	0.1…2 Hz (0.2 Hz)*
Relative uncertainty, frequency in the range of 15…460 Hz	±0.2 %, ±1 digit

Time response

Start-up delay *t*	0…300 s (0 s)*
Response delay $t_{on1/2}$	0…300 s (0 s)*
Delay on release t_{off}	0…300 s (0.5 s)*
Resolution of setting *t*, $t_{on1/2}$, t_{off} (0…10 s)	0.1 s
Resolution of setting *t*, $t_{on1/2}$, t_{off} (10…99 s)	1 s
Resolution of setting *t*, $t_{on1/2}$, t_{off} (100…300 s)	10 s
Operating time, voltage t_{ae}	≤ 140 ms
Operating time, frequency t_{ae}	≤ 335 ms
Response time t_{an}	$t_{an} = t_{ae} + t_{on1/2}$
Discharging time energy backup on power failure	≥ 2.5 s
Charging time energy storage	≤ 60 s
Recovery time t_b	≤ 300 ms

Displays, memory

Display	LC display, multifunctional, not illuminated
Display range measured value	AC/DC 0…500 V
Operating uncertainty, voltage at 50/60 Hz	±1.5 %, ±2 digits
Operating uncertainty voltage in the range of 15…460 Hz	±3 %, ±2 digits
Operating uncertainty, frequency in the range of 15…460 Hz	±0.2 %, ±1 digit
History memory (HiS) for the first alarm value	data record measured values
Password	Off/0…999 (OFF)*
Fault memory (M) alarm relay	on/off/con (on)*

Switching elements

Number of changeover contacts	2 x 1 (K1, K2)
Operating principle	N/C operation / N/O operation
K2: Err, < U, > U, Asy, < Hz, > Hz, PHS (undervoltage < U, asymmetry Asy, N/C operation)*	
K1: Err, < U, > U, Asy, < Hz, > Hz, PHS (overvoltage > U, asymmetry Asy, N/O operation)*	
Electrical endurance, number of cycles	10000

Contact data acc. to IEC 60947-5-1

Utilisation category	AC-13	AC-14	DC-12	DC-12	DC-12
Rated operational voltage	230 V	230 V	24 V	110 V	220 V
Rated operational current	5 A	3 A	1 A	0.2 A	0.1 A
Minimum contact rating	1 mA at AC/DC ≥ 10 V				

Environment/EMC

EMC	IEC 61326
Operating temperature	-25…+55 °C

Classification of climatic conditions acc. to IEC 60721 (related to temperature and relative humidity)**:**

Stationary use (IEC 60721-3-3)	3K22
Transport (IEC 60721-3-2)	2K11
Long-term storage (IEC 60721-3-1)	1K22

Classification of mechanical conditions acc. to IEC 60721

Stationary use (IEC 60721-3-3)	3M11
Transport (IEC 60721-3-2)	2M4
Long-term storage (IEC 60721-3-1)	1M12

Connection

Connection type	screw-type terminal or push-wire terminal

Connection	**screw terminals**
Connection properties	
rigid	0.2…4 mm² (AWG 24- 12)
flexible	0.2…2.5 mm² (AWG 24-14)
Two conductors with the same cross section	
rigid/flexible	0.2…1.5 mm² (AWG 24-16)
Stripping length	8…9 mm
Tightening torque, terminal screws	0.5…0.6 Nm

Connection	**push-wire terminals**
Connection properties	
rigid	0.2…2.5 mm² (AWG 24-14)
flexible	
without ferrules	0.75…2.5 mm² (AWG 19-14)
with ferrules	0.2…1.5 mm² (AWG 24-16)
Stripping length	10 mm
Opening force	50 N
Test opening, diameter	2.1 mm

Other

Operating mode	continuous operation
Mounting position	vertically, see dimension diagram
Degree of protection, internal components (IEC 60529)	IP30
Degree of protection, terminals (IEC 60529)	IP30
Enclosure material	polycarbonate
Flammability class	UL94 V-0
DIN rail mounting acc. to	IEC 60715
Screw mounting	2 x M4 with mounting clip
Documentation number	D00138
Weight	≤ 240 g

( )* = factory setting

** The technical data are only guaranteed within the operating range of the rated frequency (15…460 Hz).

Dimension diagram (dimensions in mm)

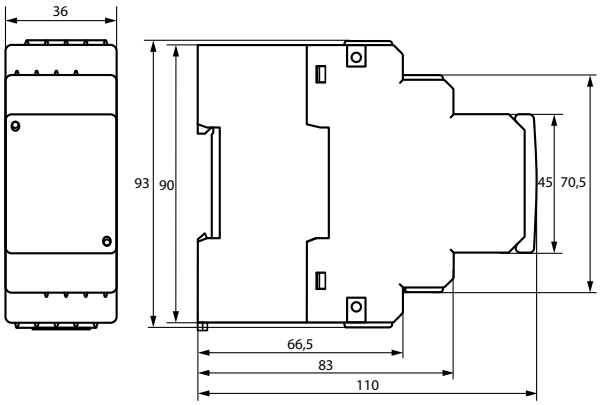

Wiring diagram

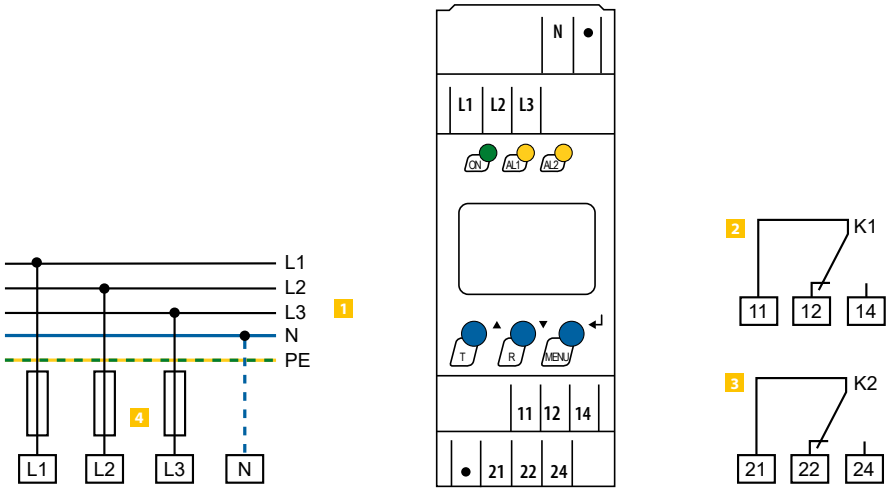

1	**L1, L2, L3, (N)**	Connection to the system/load to be monitored
2	**11, 12, 14**	Alarm relay "K1": Configurable for *U*</*U*>/*f*</*f*>/Asy/PHS/ERROR
3	**21, 22, 24**	Alarm relay "K2": Configurable for *U*</*U*>/*f*</*f*>/Asy/PHS/ERROR
4	Fuse as line protection. 6 A fuse recommended. If being supplied from an IT system, both lines have to be protected by a fuse.	

LINETRAXX® VMD423/VMD423H

Three-phase voltage and frequency monitoring relay for CHPs (Combined Heat and Power plants), wind power stations, hydroelectric power plants and photovoltaic systems in accordance with DIN V VDE V 0126-1-1

Typical applications

- Monitoring of automatic switching points between private electricity generation power system in parallel operation with the public low voltage grid
- Applications according to DIN V VDE V 0126-1-1 (VDE V 0126-1-1), C 10/11, EN 50438
- Universally applicable for photovoltaic systems, CHPs (Combined Heat and Power plants), wind power and hydro power plants

Approvals

Device features

- VMD423 with separate supply voltage
- VMD423H is supplied by the system being monitored
- Undervoltage, overvoltage and underfrequency and overfrequency monitoring in 3(N)AC systems AC 0…500 V
- Monitoring of overvoltage by average determination of the latest 10-minute measuring interval
- Asymmetry, phase failure and phase sequence monitoring
- Start-up delay, response delay and delay on release
- Adjustable switching hysteresis
- rms value measurement (AC+DC)
- Digital measured value display via multi-functional LC display
- LEDs: Power On, Alarm 1, Alarm 2
- Measured value memory for operating value
- Continuous self monitoring
- Internal test/reset button
- Two separate alarm relays (one changeover contact each)
- N/C or N/O operation and fault memory behaviour selectable
- Password protection for device settings
- Sealable transparent cover
- Push-wire terminal (two terminals per connection)
- Two-module enclosure (36 mm)
- RoHS compliant

Certificates of non-objection

- DIN V VDE V 0126-1-1 (France, Switzerland)
- DIN V VDE V 0126-1-1 and EN 50438 (Czech Republic)
- C 10/11 (Belgium)

Further information

For further information refer to our product range on www.bender.de.

Ordering information

Type	Supply voltage [1] U_s	Response value	Art. No.	
			Screw-type terminal	Push-wire terminal
VMD423-D-1	AC 16…72 V, 15…460 Hz / DC 9,6…94 V	AC 10…500 V	B93010020	B73010020
VMD423-D-2	AC 70…300 V, 15…460 Hz / DC 70…300 V	AC 10…500 V	B93010021	B73010021
VMD423H-D-3	U_n	AC 70…500 V	B93010022	B73010022

[1] Absolute values

Accessories

Description	Art. No.
Mounting clip for screw mounting (1 piece per device)	B98060008

Insulation coordination acc. to IEC 60664-1/IEC 60664-3

Rated insulation voltage	400 V
Rated impulse voltage/pollution degree	4 kV/III
Protective separation (reinforced insulation) between	(A1, A2) - (N, L1, L2, L3) - (11, 12, 14) - (21, 22, 24)
Voltage test according to IEC 61010-1:	
(N, L1, L2, L3) - (A1, A2), (11, 12, 14)	3.32 kV
(N, L1, L2, L3) - (21, 22, 24)	2.21 kV
(A1, A2) - (11, 12, 14) - (21, 22, 24)	2.21 kV

Supply voltage

VMD423-D-1:	
Supply voltage U_s	AC 16…72 V/DC 9.6…94 V
Frequency range U_s	15…460 Hz
VMD423-D-2:	
Supply voltage U_s	AC/DC 70…300 V
Frequency range U_s	15…460 Hz
Power consumption	≤ 3.5 VA
VMD423H-D-3:	
Supply voltage U_S	none (internally supplied by U_n)
Power consumption	≤ 5 VA

Measuring circuit

Measuring range (r.m.s. value) (L-N)	AC 0…288 V
Measuring range (r.m.s. value) (L-L)	AC 0…500 V
Rated frequency f_n	40…65 Hz
Frequency display range	25…100 Hz

Response values

Type of distribution system	3(N)AC/3AC (3(N)AC)*
Undervoltage< *U* (Alarm 2) (measurement method: 3Ph/3n)	AC 10…500/10…288 V (3n: AC 184 V)*
Overvoltage > *U*1 (Alarm 1) (measurement method: 3Ph/3n)	AC 10…500/10…288 V (3n: AC 264 V)*
Overvoltage > *U*2 (Alarm 1) (measurement method: 3Ph/3n)	AC 10…500 V/10…288 V (3n: AC 253 V)*
Overvoltage *U*2	10-minute average determination
Schrittweite *U*	1 V
Hysteresis *U*	1…40 % (5 %)*
Asymmetry	5…30 % (30 %)*
Phase failure	by setting the asymmetry
Phase sequence	clockwise R/anticlockwise L (R/on)*
Relative uncertainty, voltage at 50/60 Hz	±1.5 %, ±2 digits
Underfrequency< Hz	45…65 Hz (47.5 Hz)*
Overfrequency > Hz	45…65 Hz (50.2 Hz)*
Resolution of setting *f*	0.1 Hz
Hysteresis frequency Hys Hz	0.1…2 Hz (0.1 Hz)*
Relative uncertainty, frequency 40…65 Hz	±0.1 %, ±1 digit

Time response

Start-up delay *t*	0…300 s (30 s)*
Response delay $t_{on1/2}$	0…300 s (0.1)
Delay on release t_{off}	0…300 s (30 s)*
Resolution of setting *t*, t_{off}, $t_{on1/2}$ (0…10 s)	0.1 s
Resolution of setting *t*, t_{off}, $t_{on1/2}$ (10…99 s)	1 s
Resolution of setting *t*, t_{off}, $t_{on1/2}$ (10.0…300 s)	10 s
Operating time, voltage t_{ae}	≤ 80 ms
Operating time, frequency t_{ae}	≤ 80 ms
Response time t_{an}	$t_{an} = t_{ae} + t_{on1/2}$
Recovery time t_b	≤ 300 ms

Displays, memory

Display	LC display, multifunctional, not illuminated
Display range measured value	AC 0…500 V
Operating uncertainty, voltage at 50/60 Hz	± 1.5 %, ± 2 digits
Operating uncertainty, frequency in the range of 40…65 Hz	± 0.1 %, ± 1 digit
History memory (HiS) for the first alarm value	data record measured values
Password	off/on / 0…999 (on/126)*
Fault memory (M) alarm relay	on/off/con (off)*

Switching elements

Number	2 x 1 changeover contacts (K1, K2)
Operating principle K1/K2	N/O operation n.o/N/C operation n.c
K1:	(undervoltage < *U*, overvoltage > *U*1, asymmetry Asy, underfrequency < Hz, overfrequency > Hz, alarm when starting SAL, N/C operation n.c.)*
K2:	(device error Err, undervoltage < *U*, overvoltage > *U*1, asymmetry Asy, underfrequency < Hz, overfrequency > Hz, phase sequence PHS , overvoltage > *U*2, alarm when starting SAL, N/C operation n.c.)*
Electrical endurance, number of cycles	10000

Contact data acc. to IEC 60947-5-1:

Utilisation category	AC 13	AC 14	DC-12	DC-12	DC-12
Rated operational voltage	230 V	230 V	24 V	110 V	220 V
Rated operational current	5 A	3 A	1 A	0.2 A	0.1 A
Minimum contact rating	1 mA at AC/DC ≥ 10 V				

Environment/EMC

EMC	IEC 61326
Operating temperature	- 25…+ 55 °C

Classification of climatic conditions acc. to IEC 60721 (related to temperature and relative humidity)**:**

Stationary use (IEC 60721-3-3)	3K22
Transport (IEC 60721-3-2)	2K11
Long-term storage (IEC 60721-3-1)	1K22

Classification of mechanical conditions acc. to IEC 60721:

Stationary use (IEC 60721-3-3)	3M11
Transport (IEC 60721-3-2)	2M4
Long-term storage (IEC 60721-3-1)	1M12

Connection

Connection type	screw-type terminal or push-wire terminal
Connection	**screw terminals**
Connection properties	
rigid	0.2…4 mm² (AWG 24- 12)
flexible	0.2…2.5 mm² (AWG 24-14)
Two conductors with the same cross section	
rigid/flexible	0.2…1.5 mm² (AWG 24-16)
Stripping length	8…9 mm
Tightening torque, terminal screws	0.5…0.6 Nm
Connection	**push-wire terminals**
Connection properties	
rigid	0.2…2.5 mm² (AWG 24-14)
flexible	
without ferrules	0.75…2.5 mm² (AWG 19-14)
with ferrules	0.2…1.5 mm² (AWG 24-16)
Stripping length	10 mm
Opening force	50 N
Test opening, diameter	2.1 mm

Other

Operating mode	continuous operation
Mounting	any position
Degree of protection, internal components (IEC 60529)	IP30
Degree of protection, terminals (IEC 60529)	IP30
Flammability class	UL94 V-0
DIN rail mounting acc. to	IEC 60715
Enclosure material	polycarbonate
Screw mounting	2 x M4 with mounting clip
Documentation number	D00139
Weight	
VMD423	≤ 150 g
VMD423H	≤ 240 g

( )* = Factory setting

Dimension diagrams (dimensions in mm)

VMD423

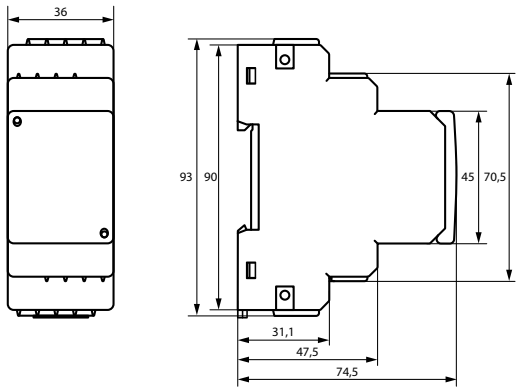

VMD423H

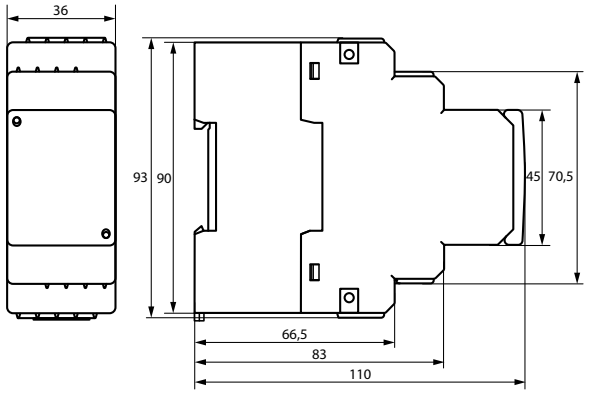

Wiring diagram – VMD423

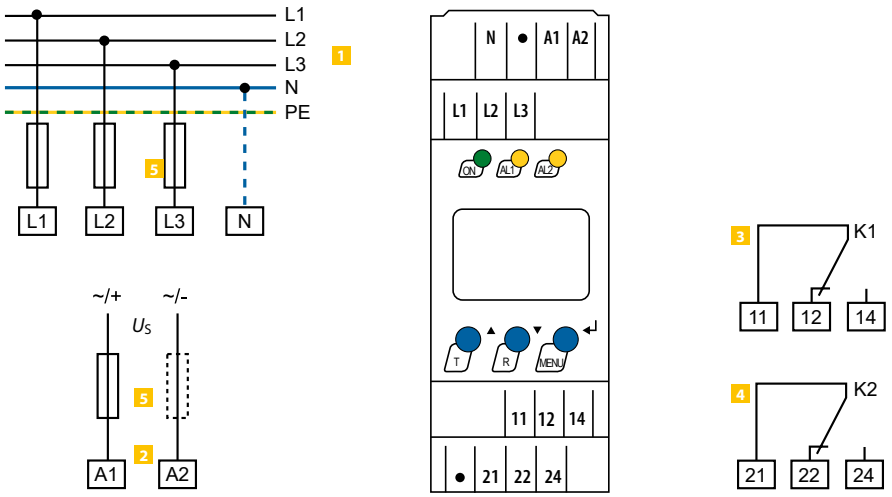

1	**L1, L2, L3, (N)**	Connection to the system/load to be monitored
2	**A1, A2**	Supply voltage U_S (see ordering information)
3	**11, 12, 14**	Alarm relay "K1": Configurable for *U*</*U*1>/*U*2>/*f*</*f*>/Asy/PHS/ERROR
4	**21, 22, 24**	Alarm relay "K2": Configurable for *U*</*U*1>/*U*2>/*f*</*f*>/Asy/PHS/ERROR
5	Fuse as line protection. 6 A fuse recommended. If being supplied from an IT system, both lines have to be protected by a fuse	

Wiring diagram – VMD423H

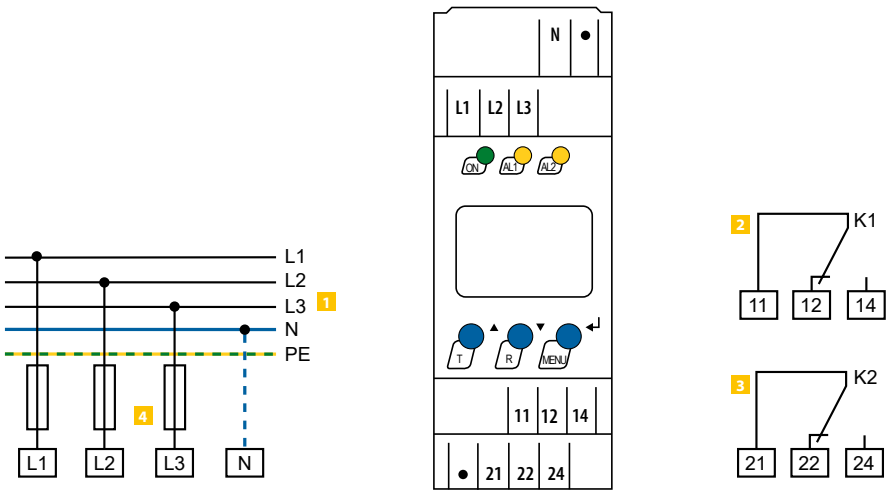

1	**L1, L2, L3, (N)**	Connection to the system/load to be monitored
2	**11, 12, 14**	Alarm relay "K1": Configurable for *U*</*U*1>/*U*2>/*f*</*f*>/Asy/PHS/ERROR
3	**21, 22, 24**	Alarm relay "K2": Configurable for *U*</*U*1>/*U*2>/*f*</*f*>/Asy/PHS/ERROR
4	Fuse as line protection. 6 A fuse recommended. If being supplied from an IT system, both lines have to be protected by a fuse	

LINETRAXX® VMD460-NA

Network and system protection (NS protection)
for monitoring the power feed-in of power generation systems

Typical applications

- Central NS protection (VDE-AR-N 4105)
- Protective disconnection (VDE-AR-N 4110, BDEW)
- Interface Protection (IP) (Engineering Recommendations; EREC G99, G59, G83, G59)
- Protezione di interfaccia (CEI 0-21)
- Automatic disconnection device between a generating plant parallel to the network and the public network
- Universal for generating plants for safe network decoupling

Approvals

Device features

- Monitoring of different system types: 1AC, 3AC, 3NAC
- Continuous monitoring of the phase voltage and line-to-line voltage
- (Re)connection and monitoring of the conditions
- Reconnection after
  – short interruptions
  – df/dt detection (ROCOF)
  – vector shift detection
- Voltage protection functions *U*<, *U*<<, *U*>> and *U*>
- Frequency protection functions *f*<, *f*<<, *f*>> and *f*>
- Islanding detection df/dt (ROCOF), vector shift detection
- Unbalance detection
- Monitoring of the tripping circuits and interface switches by means of contact feedback
- Remote trip: remote disconnection via ripple-control receiver
- Test function for checking the tripping circuit, the interface switch and for determining the connection times
- Automatic self test
- Password protection
- Reset device to factory settings
- History memory of the last 300 faults with time stamp (real-time clock)
- Language selection (German, English, Italian)
- Remote configuration and remote maintenance using COM465IP and/or CP9…-I (RS-485)
- Backlit graphic LC display
- Sealable enclosure
- Single-fault tolerance

Standard/application guide

- VDE-AR-N 4105:2018-09
- VDE-AR-N 4105:2011-08
- VDE-AR-N 4110:2018-11
- BDEW-Richtlinie 2008 einschl. Ergänzungen bis 01.2013
- DIN V VDE V 0126-1-1(:2016-06, /A1:2012-02)
- CEI 0-21 (:2012-06, :V1:2012-12, :V2:2013-12, :2014-09, :V1:2014-12, :2016-07, V1:2017-07)
- C10/11:2012-06
- G98/1-4:2019
- G83/2:2012
- G99/1-4:2019
- G59/3:2013
- G59/2(:2010, -1:2011
- UL File No. E173157

Further information

For further information refer to our product range on www.bender.de.

Ordering information

Type	Supply voltage U_s	Art. No.
VMD460-NA-D-2	AC/DC 100…240 V	B93010045

Device version with push-wire terminal on request.

Accessories

Description	Art. No.
Mounting clip for screw mounting (1 piece per device)	B98060008

Insulation coordination acc. to IEC 60664-1/IEC 60664-3

Rated voltage	400 V
Rated impulse voltage/ Overvoltage category	6 kV/III
Pollution degree	2
Protective separation (reinforced insulation) between	
	(A1, A2) - (L1, L2, L3, N) - (11, 12, 14, 21, 22, 24)
	(D1, D2, D3, D4, DG1/2, DG3/4, RTG, RT1)-(A1, A2, L1, L2, L3, N)
Voltage test according to IEC 61010-1:	
(N, L1, L2, L3) - (A1, A2), (11, 12, 14, 21, 22, 24)	3.32 kV

Supply voltage

Nominal supply voltage U_S	AC/DC 100…240 V
	DC/50/60 Hz
Operating range U_S	AC/DC 75…300 V
	DC/40…70 Hz
Power consumption at AC 230 V	< 7.5 VA/< 3.5 W
maximum	9 VA/3.5 W
Bridging time at U_s = 230 V and dip to 0 V	600 ms

Measuring circuit

System type	1AC, 3(N)AC
Nominal system voltage U_n (r.m.s. value) (L-N)	AC 0…300 V
Nominal system voltage U_n (r.m.s. value) (L-L)	AC 0…520 V
Input impedance (Load) L1, L2, N	480 kΩ
Input impedance (Load) L3	680 kΩ
Rated frequency f_n (U_n > 20 V)	45…65 Hz
Response values	1…150 %
Relative uncertainty, voltage	U ≤ 280 V: ≤ ±1 %
	U > 280 V: ±3 %
Resolution of setting, voltage	1 %
Nominal frequency	50 Hz
Relative uncertainty, frequency	≤ ±0.1 %
Resolution of setting f	0.05 Hz

Recording of measured value, switching condition (reconnection and disconnection)

L-N, L-L	0…1.5 U_n
f< , f<<	45…60 Hz
f> , f>>	50…65 Hz

Recording of measurement value, condition for disconnection

df/dt	0.05…9.9 Hz/s

Time response

Delay time for connection t_{on}	40 ms…60 min
Resolution of setting t_{on}	
< 50 ms:	5 ms
50 …200 ms:	10 ms
200 ms …5 s:	50 ms
5 …10 s	0.1 s
10 s…60 s:	1 s
60 …300 s:	10 s
300 s…60 min:	1 min
Operating time voltage t_{ae}	half a supply period
Operating time, frequency t_{ae}	≤ 40 ms
Recovery time t_b	≤ 300 ms

Digital inputs

Monitoring of potential-free contacts or voltage inputs:	closed = low; 0…4 V; I_{in} < -5 mA
	open = high; > 6…≤ 30 V
D1	feedback signal contact K1
D2	feedback signal contact K2
D3	local control (mode)
D4	external signal (mode)
RT1	remote trip
DG1/2, DG3/4, RTG	GND
Max. length of the connecting cables of digital inputs	3 m

Displays, memory

Display	LC display, multi-functional, illuminated
Display range, measured value	AC/DC 0…520 V
Operating uncertainty, voltage	U ≤ 280 V: ≤ ±1 %
	U > 280 V: ±3 %
Operating uncertainty, frequency	≤ ±0.1 %
History memory for the last 300 messages	1 data record of measured values each
Password	off/on/0…999 (off)*

Switching elements

Number of changeover contacts	2 x 1 (K1, K2)
Operating mode	NC operation/NO operation
Electrical endurance in rated operating conditions	10,000 cycles

Contact data acc. to IEC 60947-5-1

Utilisation category	AC-13	AC-14	DC-12	DC-12	DC-12
Rated operational voltage	230 V	230 V	24 V	110 V	220 V
Rated operational current	5 A**	3 A	1 A	0.2 A	0.1 A

** Rated operational current for UL508 and CSA C22.2 = 4 A

Minimum contact rating	10 mA at AC/DC ≥ 5 V

Environment/EMC

EMC	DIN EN 60255-26/CEI 0-21
Operating temperature	-25…+55 °C

Classification of climatic conditions acc. to IEC 60721 (related to temperature and relative humidity)**:**

Stationary use (IEC 60721-3-3)	3K22
Transport (IEC 60721-3-2)	2K11
Long-term storage (IEC 60721-3-1)	1K22

Classification of mechanical conditions acc. to IEC 60721

Stationary use (IEC 60721-3-3)	3M11
Transport (IEC 60721-3-2)	2M4
Long-term storage (IEC 60721-3-1)	1M22

Connection

Connection type	screw-type terminals or push-wire terminals
Connection properties:	
rigid	0.2…4 mm² (AWG 24-12)
flexible	0.2…2.5 mm² (AWG 24-14)
Stripping length	8…9 mm
Tightening torque	0.5…0.6 Nm (5…7 lb-in)

Other

Operating mode	continuous operation
Mounting	any position
Degree of protection, internal components (DIN EN 60529)	IP30
Degree of protection, terminals (DIN EN 60529)	IP20
Enclosure material	polycarbonate
Flammability class	UL94 V-0
DIN rail mounting acc. to	IEC 60715
Screw mounting	2 x M4
Documentation number	D00001
Weight	≤ 360 g

( )* = Factory setting

Dimension diagrams (dimensions in mm)

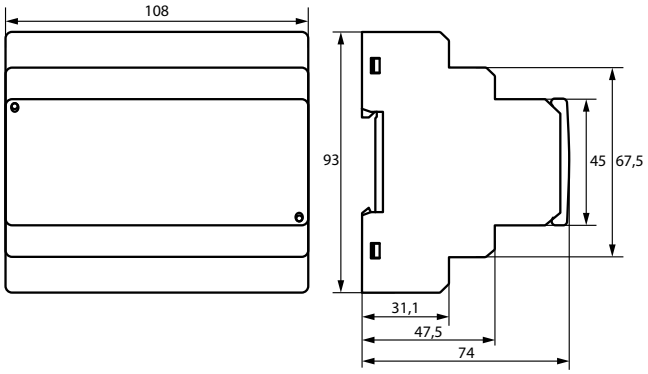

Wiring diagram VMD460 (VDE-AR-N 4105:2018 – basic program 4105_2)

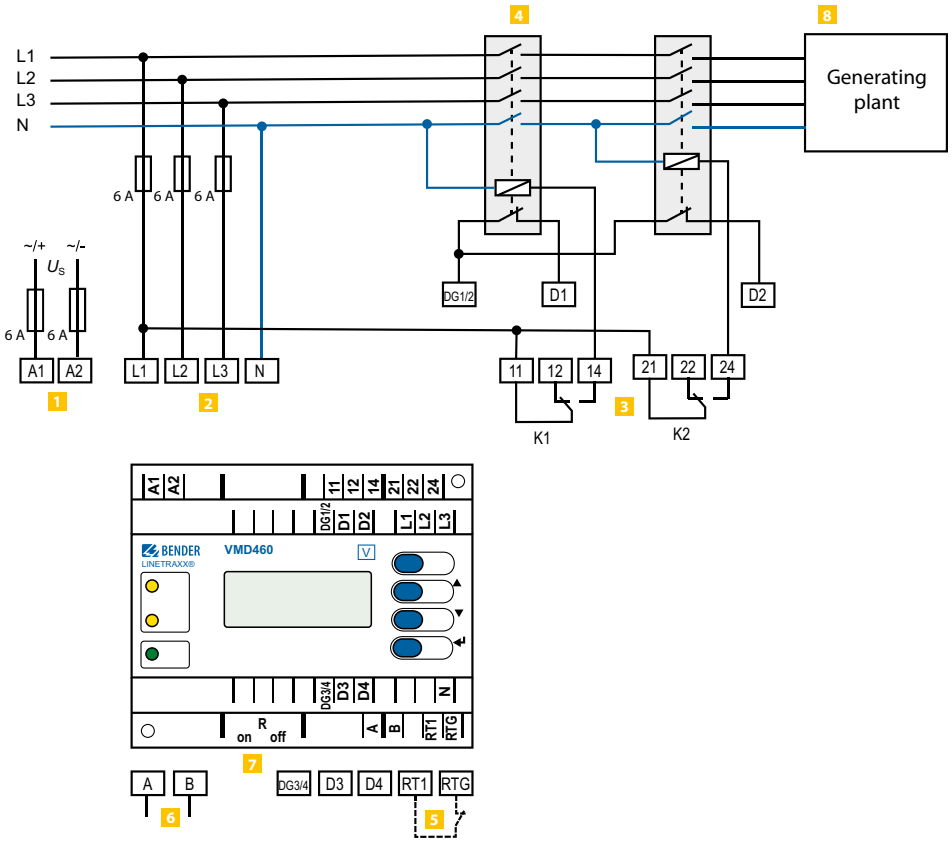

1	**A1, A2**	Supply voltage U_S (see ordering details)
2	**L1, L2, L3, N**	Power supply connection
3	**K1, K2**	Relay connections
4	**DG1/2, D1**	Central interface switch with contact monitoring D1: Feedback signal contact K1 *(feedback signal contacts optionally NC/NO/off)**
5	**RTG, RT1**	RTG: GND RT1: remote trip input *(optionally NC/NO/off)**
6	**A, B**	Service interface
7	**Ron/off**	Activate or deactivate the terminating resistor of the service interface (120 Ω)
8	**DG1/2, D2**	Generating unit (in this case PV inverter with an integrated interface switch and contact monitoring) D2: Feedback signal contact K2 *(feedback signal contacts optionally NC/NO/off)**

* **NO** (in non-operating state open)
NC (in non-operating state closed)
off (contact monitoring switched off)

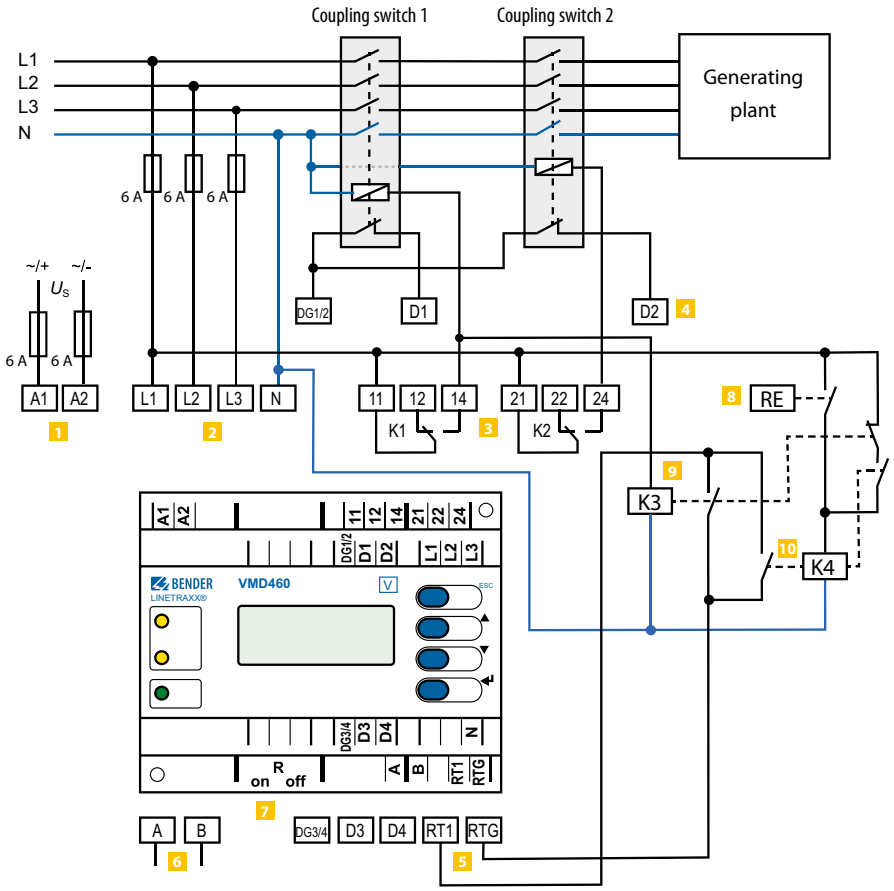

Within the scope of VDE-AR-N 4110, the VMD460-NA can be used as protective disconnection device for the generating unit or as higher-level protective disconnection, the latter, however, only if the Q-U protection function may be dispensed with. According to VDE-AR-N 4110 chapter 10.3.3.4 par. 5, this is possible after consultation with the network operator and under the following conditions:

- Generating plants with limited dynamic network support or
- Generating plants < 1 MVA

Both types of application are possible when the generating plant is connected to the busbar of a substation (MV-busbar) or when the generating plant is connected to the medium-voltage network (MV-network).

1	**A1, A2**	Supply voltage U_S (see ordering details)
2	**L1, L2, L3, N**	Power supply connection
3	**K1, K2**	Relay connections
4	**DG1/2, D1, D2**	Contact monitoring coupling switchDG1/2: GND D1: Feedback signal contact K1 D2: Feedback signal contact K2 *(feedback signal contacts optionally NC/NO/off)**
5	**RTG, RT1**	RTG: GND RT1: remote trip input *(optionally NC/NO/off)**
6	**A, B**	Service interface
7	**$R_{on/off}$**	Activate or deactivate the terminating resistor of the service interface (120 Ω)
8	**RE**	Ripple-control receiver
9	**K3**	External relay with an N/C contact and an N/O contact
10	**K4**	External relay with two N/O contacts
	DG3/4, D3, D4	Not used for the standard mentioned before

* **NO** (in non-operating state open)
NC (in non-operating state closed)
off (contact monitoring switched off)

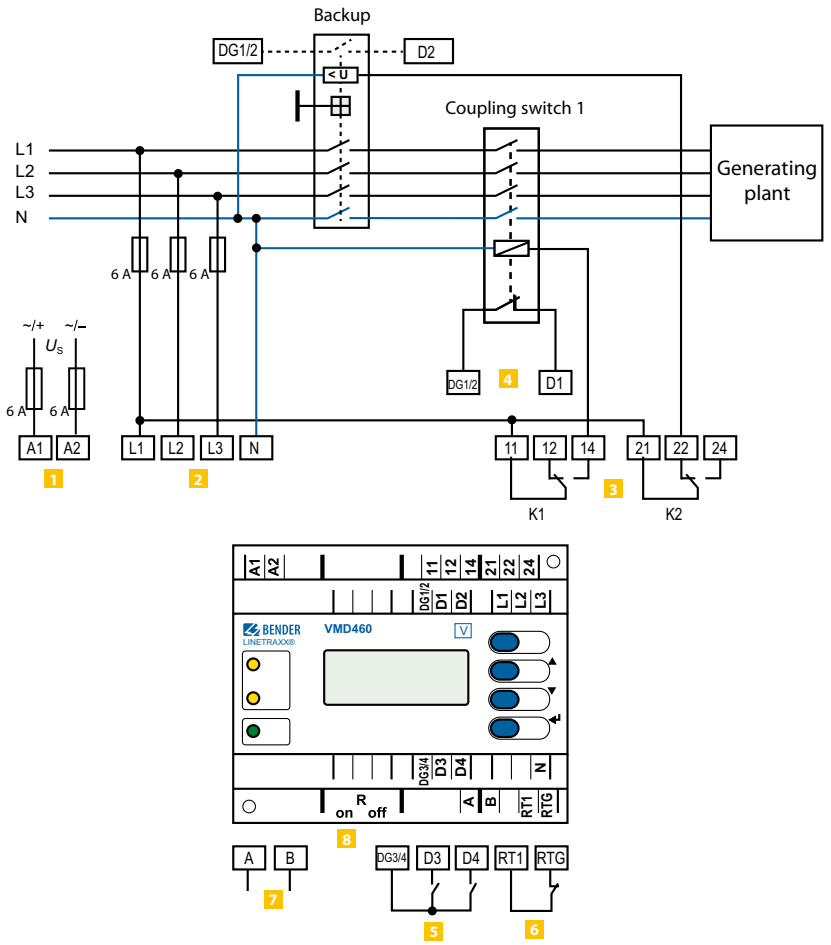

1	**A1, A2**	Supply voltage U_S (see ordering details)
2	**L1, L2, L3, N**	Power supply connection
3	**K1, K2**	Relay connections
4	**DG1/2, D1, D2**	Contact monitoring, coupling switch DG1/2: GND D1: Feedback signal contact K1 D2: Feedback signal contact K2 *(feedback signal contacts optionally NC/NO/off)**
5	**DG3/4, D3, D4**	Digital inputs (external monitoring) DG3/4: GND D3: local control (CEI 0-21 8.6.2.1.1)** D4: external signal (CEI 0-21 8.6.2.1.2)** *(optionally NC/NO/off)**
6	**RTG, RT1**	RTG: GND RT1: Remote trip input *(optionally NC/NO/off)**
7	**A, B**	Service interface
8	$R_{on/off}$	Activate or deactivate the terminating resistor of the BMS bus (120 Ω)

* **NO** (in non-operating state open)

NC (in non-operating state closed)

off (contact monitoring switched off)

** In order to evaluate the inputs D3 and D4, the mode can be adjusted correspondingly in the menu (menu: 3. Settings --> 1. General --> 4. Mode)

LINETRAXX® VMD461 with CD440 coupling device

Multifunctional voltage relay for AC, DC, 3(N)AC systems

Typical applications

- Monitoring of voltage-sensitive machines and installations
- Switching installations on and off at a certain voltage level
- Protection of three-phase motors against phase failure and phase open-circuit
- Vector shift detection for protection of electrical machines
- Islanding detection ROCOF (rate of change of frequency)
- Transformer protection by recognising asymmetrical load

Approvals

Device features

- When combined with a CD440 coupling device, DC systems up to 1200 V, 1AC systems up to 690 V, 3AC systems up to 1200 V and 3NAC systems up to 690 V can be monitored
- All functions are represented in ANSI codes
- Monitoring of DC, 1AC, 3(N)AC systems DIN EN 60255-1:2010-9
- Single-fault safety
- Unbalance, phase failure and phase sequence monitoring
- Monitoring of the connected switches and/or disconnectors (configurable: NC/NO/off)
- Islanding detection df/dt (ROCOF)
- Vector shift function
- RS-485 interface (data exchange/parameter setting/software update)
- Test function to determine the switch-off time
- Test button for the trigger circuit
- The last 300 network faults can be recalled with time stamp/real-time clock
- Continuous monitoring of the phase voltage and line-to-line voltage
- Special switch-on conditions after an infringement of a response value
- Language selection (German, English, French)
- Backlit graphic LC display
- Password protection for device setting
- Remote shutdown via ripple control signal receiver
- Sealable enclosure

Standards

The device fulfils the requirements of the following standards:

- DIN EN 60255-127 (IEC 60255-127)
- VDE 0435-3127
- UL File: E173157

Further information

For further information refer to our product range on www.bender.de.

Ordering information

Type	Description	Supply voltage U_s	Art. No.
VMD461-D-2	Multifunctional voltage relay	AC/DC 100…240 V	B93010047
CD440	Coupling device	–	B73010046

Accessories

Description	Art. No.
Mounting clip for screw mounting (1 piece per device)	B98060008

Suitable system components

Description	Device variants / Supply voltage U_s	Type	Art. No.	Page
Condition Monitor	with an integrated gateway: Bender system/Ethernet	COM465IP	B950610…	**394**
		CP9…-I	B9506103…	**408**
RS-485 repeater	AC/DC 24 V ± 20 %	DI-1PSM	B95012044	–

Insulation coordination of the device combination VMD461/CD440:

Rated voltage ≤ 1000 V	acc. to IEC 60664-1/IEC 60664-3
Rated voltage > 1000 V	acc. to EN 50178:1998

Definitions

Measuring circuit (IC1)	CD440 (L1, L2/DC+, L3, N/DC–)
Measuring circuit (IC2)	VMD461 (L1, L2/DC+, L3, N/DC–)
Supply circuit (IC3)	VMD461 (A1, A2)
Control circuit (IC4)	VMD461 (D1, D2, DG1/2, RTG, RT1)
Output circuit 1 (IC5)	VMD461 (11, 12, 14)
Output circuit 2 (IC6)	VMD461 (21, 22, 24)
Output circuit 3 (IC7)	VMD461 (A, B)

Rated voltage

IC1	DC, 3AC: 1200 V 1AC, 3NAC: 690 V
IC2	400 V
IC3	250 V
IC5, IC6	250 V

Rated impulse voltage

Overvoltage category	III
Max. altitude	2000 m
IC1/(IC2…6)	10.5 kV
IC2/(IC3…6)	4 kV
IC3/(IC4…6)	4 kV
IC4/(IC5…6)	4 kV
IC5/IC6	4 kV

Rated insulation voltage

Pollution degree	3
IC1/(IC2…6)	DC, 3AC: 1250 V 1AC, 3NAC: 800 V
IC2/(IC3…6)	400 V
IC3/(IC4…6)	400 V
IC4/(IC5…6)	400 V
IC5/IC6	4 kV

Protective separation (reinforced insulation):

IC1/(IC3…6)	DC, 3AC: Overvoltage category III, 1250 V 1AC, 3NAC: Overvoltage category III, 1000 V
IC2/(IC3…6)	300 V
IC3/(IC4…6)	300 V
IC4/(IC5…6)	300 V
IC5/IC6	300 V

Voltage test (routine test) acc. to IEC 60255-27/DIN EN 50178:1998

IC2/(IC3…6)	2.21 kV
IC3/(IC4…6)	2.21 kV
IC4/(IC5…6)	2.21 kV
IC5/IC6	2.21 kV

Supply voltage

Nominal supply voltage U_s	100…240 V
Tolerance U_s	±25 %
Nominal frequency range U_s	DC, 50/60 Hz
Power consumption at AC 230 V	< 3.5 W/ < 7.5 VA
maximum	3.5 W/9 VA

Measuring circuit

VMD461

System type	DC, 1AC, 3AC, 3NAC
Nominal voltage U_n	
L-N)	AC 50…260 V
(L-L)	AC 87…450 V
(DC+/DC–)	DC 50…450 V
Measuring range	0…1.15 x U_n
Overload capacity	1.5 x U_n max for 5 s
Response values	1…150 %
Operating uncertainty U_n	≤ ±1 %
Resolution of setting U_n	1 %
Rated frequency	DC, 50/60 Hz
Frequency range U_n	DC, 45…65 Hz
Resolution of setting *f*	0.05 Hz
Relative uncertainty *f*	≤ ±0.1 %

VMD461 with CD440

System type	DC, 1AC, 3AC, 3NAC
Nominal voltage U_n	
(L-N)	AC 250…690 V
(L-L)	AC 440…1200 V
(DC+/DC–)	DC 250…1200 V
Nominal voltage U_n for Canada	
(L-N)	AC 250…600 V
(L-L)	AC 440…600 V
(DC+/DC–)	DC 250…600 V
Measuring range	0…1.15 x U_n
Overload capacity	1.5 x U_n max for 5 s
Response values	1…150 %
Operating uncertainty U_n	≤ ±2 %
Resolution of setting U_n	1 %
Rated frequency	DC, 50/60 Hz
Frequency range U_n	DC, 45…65 Hz
Resolution of setting *f*	0.05 Hz
Relative uncertainty *f*	≤ ±0.1 %

Recording of measurement values, switch-on condition

U<, *U*<<, *U*<<<	1…100 %
U>, *U*>>, *U*>>>	100…150 %
f<, *f*<<, *f*<<<	45…60 Hz
f>, *f*>>, *f*>>>	50…65 Hz
Phase sequence/Polarity	right, left

Recording of measurement value, switch-off condition

U<, *U*<<, *U*<<<	1…100 %
U>, *U*>>, *U*>>>	100…150 %
f<, *f*<<, *f*<<<	45…60 Hz
f>, *f*>>, *f*>>>	50…65 Hz
df/dt	0.05…9.95 Hz/s
Vector shift	1…25 %
Unbalance	1…50 %

Time response

Start-up delay $t_{start\text{-}up}$	200 ms…60 min (200 ms)*
Switch-on delay t_{on}	off, 50 ms…60 min (100 ms)*
Response delay t_{off}	off, 50 ms…60 min (100 ms)*
Operating time voltage t_{ae}	half a supply period
Operating time, frequency t_{ae}	≤ 40 ms
Recovery time t_b	300 ms

Digital inputs

Monitoring of potential-free contacts or voltage inputs:	closed = low; 0…4 V; lin < –5 mA open = high; > 6…≤ 30 V
D1	Feedback signal contact of alarm relay K1
D2	Feedback signal contact of alarm relay K2
RT1	remote trip
DG1/2, RTG	GND
max. length of the connecting cables of the digital inputs (shielded cable recommended)	10 m

Displays, memory

Display	LC display, multi-functional, illuminated
Display range, measured value	0…9.99 kV
History memory for the last 300 messages	per 1 data record measured values
Password	on/off/0…999 (off*)

Interface

Interface/protocol	RS-485/BMS
Baud rate	9.6 kBit/s
Cable length	0…1200 m
Recommended cable (shielded, shield connected to PE on one side)	min. J-Y(St)Y min. 2 x 0.8
Terminating resistor	120 Ω (0.25 W) connectable via DIP switch
Device address, BMS bus	1…90 (2)*

Technical data (continued))

Switching elements

Number of changeover contacts					2 x 1 (K1, K2)
Operating principle K1, K2					N/C operation or N/O operation (N/C)*
Electrical endurance under rated operating conditions, number of cycles					10,000

Contact data acc. to IEC 60947-5-1:

Utilisation category	AC-13	AC-14	DC-12	DC-12	DC-12
Rated operational voltage	230 V	230 V	24 V	110 V	220 V
Rated operational current	5 A	3 A	1 A	0.2 A	0.1 A
Minimum contact rating					1 mA at AC/DC ≥ 10 V

Environment/EMC

EMC	DIN EN 60255-26
Operating temperature	–25…+55 °C

Classification of climatic conditions acc. to IEC 60721 (related to temperature and relative humidity)**:**

Stationary use (IEC 60721-3-3)	3K22
Transport (IEC 60721-3-2)	2K11
Long-term storage (IEC 60721-3-1)	1K22

Classification of mechanical conditions acc. to IEC 60721:

Stationary use (IEC 60721-3-3)	3M11
Transport (IEC 60721-3-2)	2M4
Long-term storage (IEC 60721-3-1)	1M12

Connection

Connection VMD461

Connection	screw-type terminals
Connection properties:	
Rigid	0.2…4 mm² (AWG 24-12)
Flexible with ferrule	0.2…2.5 mm² (AWG 24-14)
Stripping length	8…9 mm
Tightening torque	0.5…0.6 Nm (5…7 lb-in)

Connection CD440

Connection	push-wire terminals
Rigid	0.2…2.5 mm² (AWG 24-14)
Flexible without ferrule	0.75…2.5 mm² (AWG 19-14)
Flexible with ferrule	0.2…1.5 mm² (AWG 24-16)
Stripping length	10 mm
Opening force	50 N
Test opening, diameter	2.1 mm

Other

Operating mode	continuous operation
Mounting	any position
Degree of protection, internal components (DIN EN 60529)	IP30
Degree of protection, terminals (DIN EN 60529)	IP20
Enclosure material	polycarbonate
Flammability class	UL94 V-0
DIN rail mounting acc. to	IEC 60715
Screw mounting CD440	2 x M4 with mounting clip
Screw mounting VMD461	2 x M4
Software version, measurement technology	D570 V1.2x
Software version, display	D256 V2.3x
Weight	
VMD461	≤ 360 g
CD440	≤ 125 g

( )* Factory setting

Dimension diagram (dimensions in mm)

VMD461

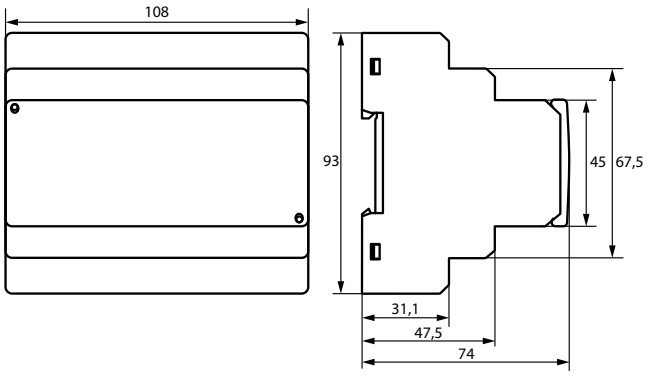

CD440

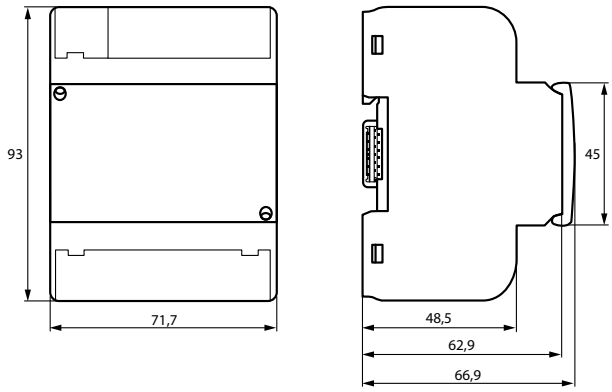

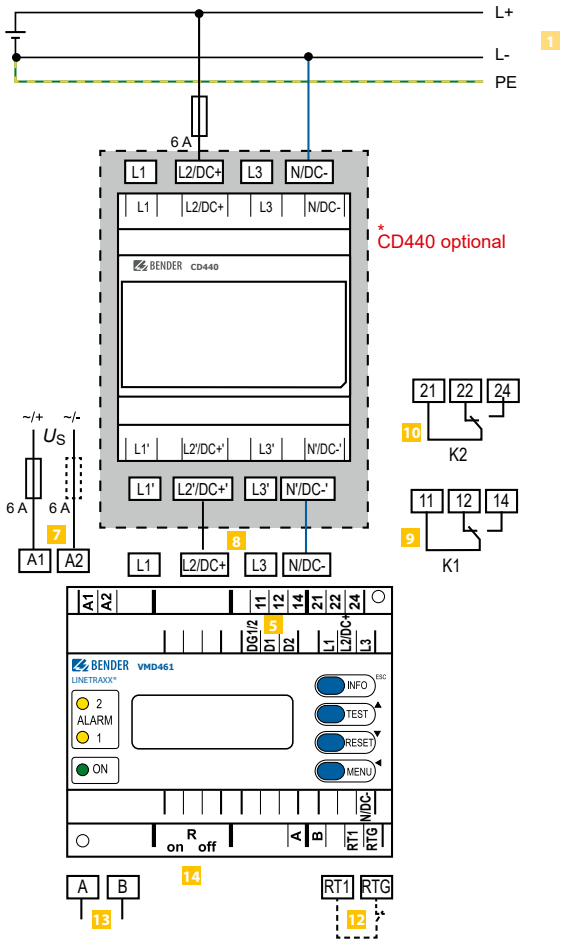
L+
L-
PE
1
6 A
L1
L2/DC+
L3
N/DC-
*CD440 optional
BENDER CD440
L1'
L2'/DC+'
L3'
N'/DC-'
~/+
~/-
U_S
6 A
6 A
7
A1
A2
8
21
22
24
10
K2
11
12
14
9
K1
A1
A2
11
12
14
21
22
24
DG1/2
D1
D2
L1
L2/DC+
L3
5
BENDER VMD461
LINETRAXX®
2
ALARM
1
ON
INFO
TEST
RESET
MENU
N/DC-
R
on
off
A
B
RT1
RTG
14
A
B
13
RT1
RTG
12

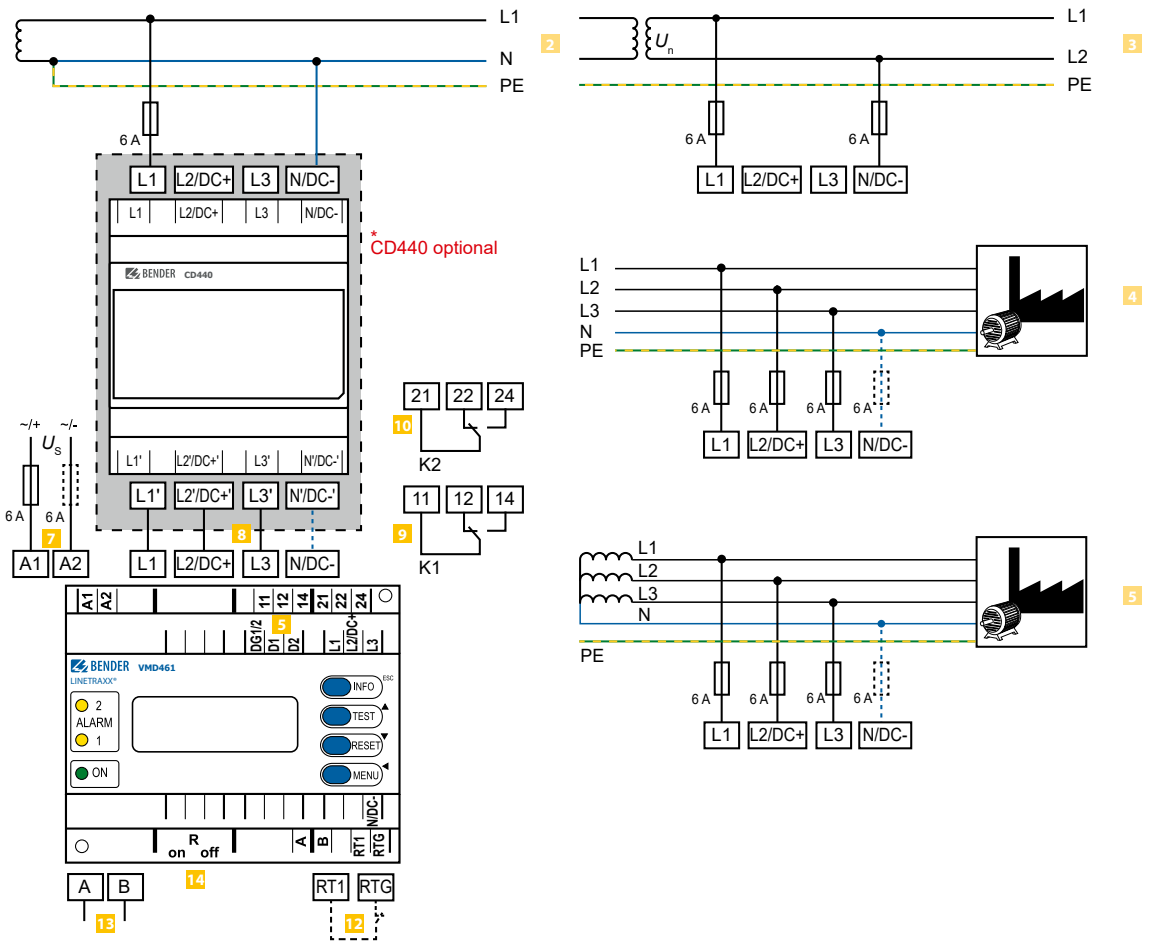
L1
N
PE
2
6 A
L1
L2/DC+
L3
N/DC-
*CD440 optional
BENDER CD440
L1'
L2'/DC+'
L3'
N'/DC-'
~/+
~/-
U_S
6 A
6 A
7
A1
A2
8
21
22
24
10
K2
11
12
14
9
K1
A1
A2
11
12
14
21
22
24
DG1/2
D1
D2
L1
L2/DC+
L3
5
BENDER VMD461
LINETRAXX®
2
ALARM
1
ON
INFO
TEST
RESET
MENU
N/DC-
R
on
off
A
B
RT1
RTG
14
A
B
13
RT1
RTG
12
L1
L2
L3
U_n
PE
3
6 A
6 A
L1
L2/DC+
L3
N/DC-
L1
L2
L3
N
PE
4
6 A
6 A
6 A
6 A
L1
L2/DC+
L3
N/DC-
L1
L2
L3
N
PE
5
6 A
6 A
6 A
6 A
L1
L2/DC+
L3
N/DC-

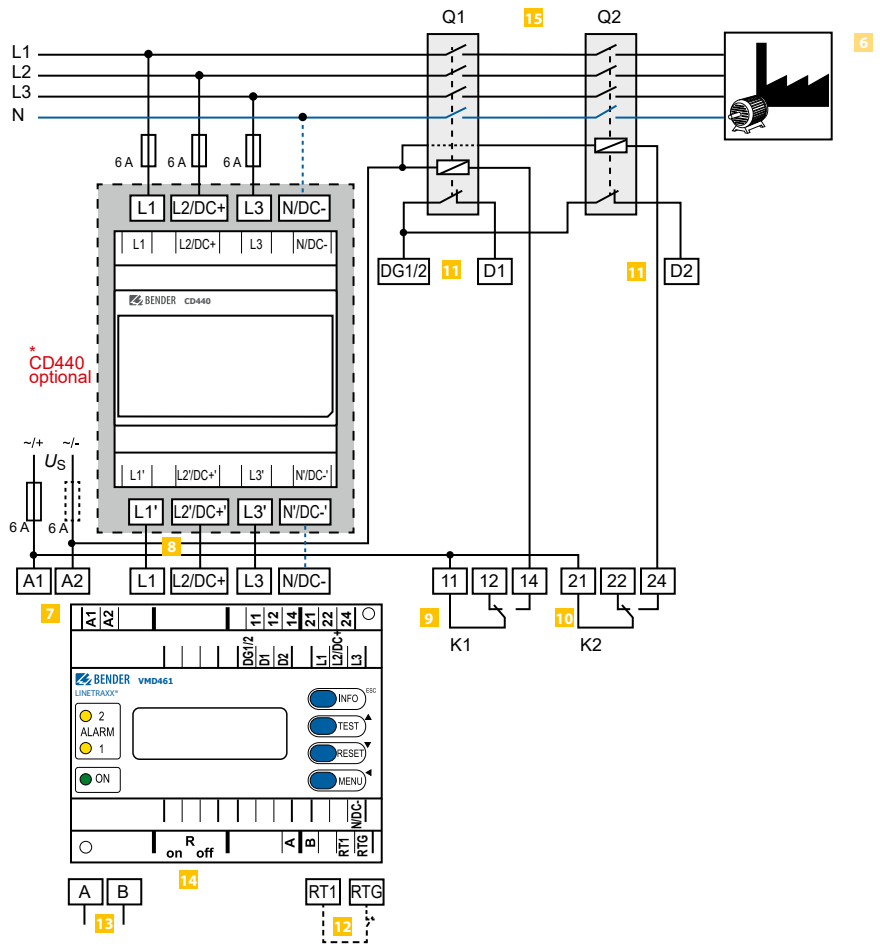

1 Connection DC: VMD461 with CD440

2 Connection AC: VMD461 with CD440 (earthed system)

3 Connection AC: VMD461 with CD440 (unearthed system)

4 Connection 3(N)AC: VMD461 with CD440 (earthed system)

5 Connection 3(N)AC: VMD461 with CD440 (unearthed system)

6 Possible wiring diagram with 2 circuit breakers

7 **A1, A2** Supply voltage U_s (see ordering details)

8 **L1, L2/DC+, L3, N/DC-** Power supply connection

9 **11, 12, 14** Connection to alarm relay K1

10 **21, 22, 24** Connection to alarm relay K2

11 **DG1/2, D1, D2** Contact monitoring
DG1/2: GND
D1: Feedback signal contact to alarm relay K1
D2: Feedback signal contact to alarm relay K2
*(feedback signal contacts optionally NC/NO/off)**

12 **RTG, RT1** RTG: GND
RT1: Remote-trip input *(optionally NC/NO/off)**

13 **A, B** Connection to communication interface BMS bus

14 $R_{on/off}$ Activate or deactivate the terminating resistor of the BMS bus (120 Ω)

15 **Q1, Q2** Circuit breakers

* **NO** (closed in non-operating state)
NC (open in non-operating state)
aus (switched off)

Schematic diagram with circuit breakers

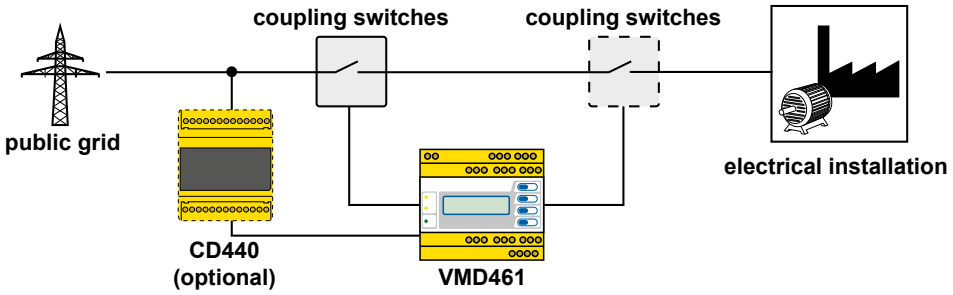

Example for a system design

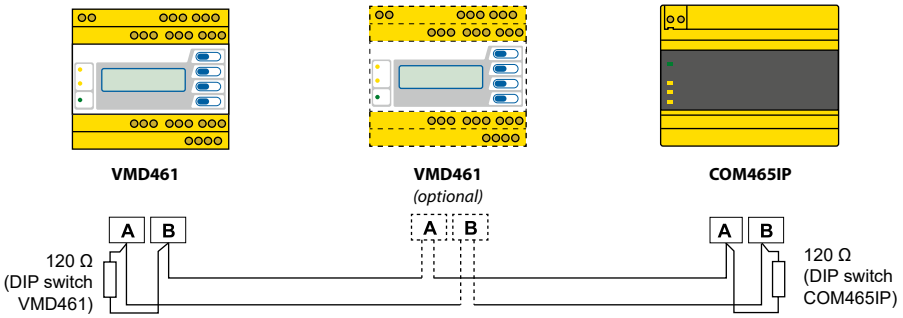

LINETRAXX® CME420

Multi-functional current relay, AC, overcurrent/undercurrent/window discriminator function

Typical applications

- Current consumption of motors, such as pumps, elevators, cranes
- Monitoring of lighting circuits, heating circuits, charging stations
- Monitoring of emergency lighting
- Monitoring of screw conveyors, e.g. in sewage plants
- Dust removal in wood working

Approvals

Device features

- Undercurrent and overcurrent monitoring in AC systems 0.1…16 A without measuring current transformer
- Indirect current monitoring with standard current transformers x/1 A, x/5 A, x/10 A
- Transformation ratio n allows adaptation to all standard current transformers x/1 A, x/5 A, x/10 A
- Different monitoring functions selectable *I* <, *I* > or *I* <*I* >
- Start-up delay, response delay, delay on release
- Adjustable switching hysteresis
- r.m.s. value measurement (AC)
- Digital measured value display via multi-functional LC display
- LEDs: Power On, Alarm 1, Alarm 2
- Measured value memory for operating value
- Continuous self monitoring
- Internal test/reset button
- Two separate alarm relays (one changeover contact each)
- N/C or N/O operation and fault memory behaviour selectable
- Password protection for device setting
- Sealable transparent cover
- Two-module enclosure (36 mm)
- Push-wire terminal (two terminals per connection)
- RoHS compliant

Standards

The LINETRAXX® CME420 series complies with the requirements of the device standards:

- IEC 60255-6.

Further information

For further information refer to our product range on www.bender.de.

Ordering information

Type	Supply voltage [1] U_s	Art. No.	
		Screw-type terminal	Push-wire terminal
CME420-D-1	AC 16…72 V, 42…460 Hz / DC 9.6…94 V	B93060001	B73060001
CME420-D-2	AC 70…300 V, 42…460 Hz / DC 70…300 V	B93060002	B73060002

[1] Absolute values

Accessories

Description	Art. No.
Mounting clip for screw mounting (1 piece per device)	B98060008

Insulation coordination acc. to IEC 60664-1/IEC 60664-3

Rated insulation voltage	250 V
Rated impulse voltage/overvoltage category	4 kV/III
pollution degree	3
Protective separation (reinforced insulation) between	(A1, A2) -(k, l) -(11, 12, 14) -(21, 22, 24)
Maximum nominal voltage of the system being monitored when the conductor being monitored is directly connected:	
With protective separation	AC 230 V
Without protective separation	AC 400 V

Supply voltage

CME420-D-1:

Supply voltage U_s	AC 16…72 V/DC 9.6…94 V
Frequency range U_s	42…460 Hz

CME420-D-2:

Supply voltage U_s	AC/DC 70…300 V
Frequency range U_s	42…460 Hz
Power consumption	≤ 4 VA

Measuring circuit

Measuring range (r.m.s. value, screw-type terminal)	AC 0.05…16 A
Measuring range (r.m.s. value, push-wire terminal)	AC 0.05…12 A
Overload capability < 1 s	40 A
Rated frequency f_n	42…2000 Hz
Burden	n.A., due to internal current transformers

Response values

Undercurrent

Undercurrent I< (alarm I_2), direct connection:	
Push-wire terminal	AC 0.1…12 A (1 A)*
Screw-type terminal	AC 0.1…16 A (1 A)*
or external current transformer	
Undercurrent I< (prewarning I_1)	100…200 % (150 %)*

Overcurrent

Overcurrent I> (alarm I_2), direct connection:	
Push-wire terminal	AC 0.1…12 A (1 A)*
Screw-type terminal	AC 0.1…16 A (1 A)*
or external current transformer	
Overcurrent I> (prewarning I_1)	10…100 % (50 %)*

Others

External current transformer	x/1 A, x/5 A, x/10 A
Transformation ratio factor n	1…2000 (1)*
Relative percentage error at 50/60 Hz	±3 %, ±2 digits
Relative percentage error in the range of 42…2000 Hz	±5 %, ±2 digits
Hysteresis	10…40 % (15 %)*

Specified time

Starting delay	0…300 s (0.5 s)*
Response delay t_{on1}	0…300 s (1 s)*
Response delay t_{on2}	0…300 s (0 s)*
Delay on release t_{off}	0…300 s (1 s)*
Operating time t_{ae}	≤ 70 ms
Response time t_{an}	$t_{an} = t_{ae} + t_{on1/2}$
Recovery time t_b	≤ 300 ms

Displays, memory

Display	LC display, multi-functional, not illuminated
Measuring range measured value x transformation ratio factor	AC 0.01…16 A x n
Operating error at 50/60 Hz	±3 %, ±2 digits
Operating error in the range of 42…2000 Hz	±5 %, ±2 digits
Measured-value memory (HiS) for the first alarm value	data record measured values
Password	Off/0…999 (Off)*
Fault memory (M) alarm relay	on/off (on)*

Switching elements

Number	2 relays, with one changeover contact each (K1, K2)
Operating principle	N/C operation n.c./N/O operation n.o. (N/C operation n.c.)*
Electrical service life under rated operating conditions	10,000 switching operations

Contact data acc. to IEC 60947-5-1

Utilization category	AC-13	AC-14	DC-12	DC-12	DC-12
Rated operational voltage	230 V	230 V	24 V	110 V	220 V
Rated operational current	5 A	3 A	1 A	0.2 A	0.1 A
Minimum contact load	1 mA at AC/DC ≥ 10 V				

Environment/EMC

EMC	IEC 61326
Operating temperature	-25…+55 °C

Classification of climatic conditions acc. to IEC 60721 (related to temperature and relative humidity)**:**

Stationary use (IEC 60721-3-3)	3K22
Transportation (IEC 60721-3-2)	2K11
Storage (IEC 60721-3-1)	1K22

Classification of mechanical conditions acc. to IEC 60721

Stationary use (IEC 60721-3-3)	3M11
Transportation (IEC 60721-3-2)	2M4
Storage (IEC 60721-3-1)	1M12

Connection

Connection type	screw-type terminal or push-wire terminal
Connection	**screw terminals**
Connection properties	
rigid	0.2…4 mm² (AWG 24- 12)
flexible	0.2…2.5 mm² (AWG 24-14)
Two conductors with the same cross section	
rigid/flexible	0.2…1.5 mm² (AWG 24-16)
Stripping length	8 mm
Tightening torque, terminal screws	0.5…0.6 Nm
Connection	**push-wire terminals**
Connection properties	
rigid	0.2…2.5 mm² (AWG 24-14)
flexible	
without ferrules	0.75…2.5 mm² (AWG 19-14)
with ferrules	0.2…1.5 mm² (AWG 24-16)
Stripping length	10 mm
Opening force	50 N
Test opening, diameter	2.1 mm

Other

Operating mode	continuous operation
Position	any position
Degree of protection DIN EN 60529, internal components	IP30
Degree of protection DIN EN 60529, terminals	IP20
Enclosure material	polycarbonate
Flammability class	UL94 V-0
DIN rail mounting acc. to	IEC 60715
Screw mounting	2 x M4 with mounting clip
Documentation number	D00034
Weight	≤ 160 g

( )* = factory setting

Dimension diagram (dimensions in mm)

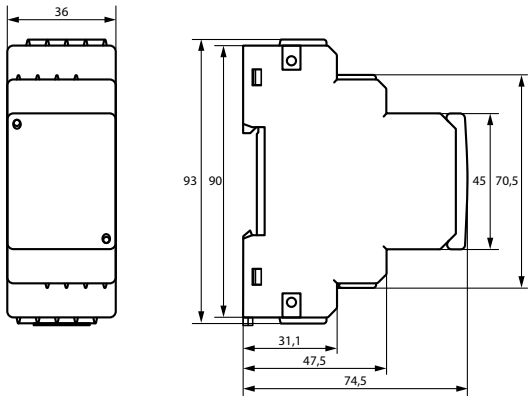

Wiring diagram

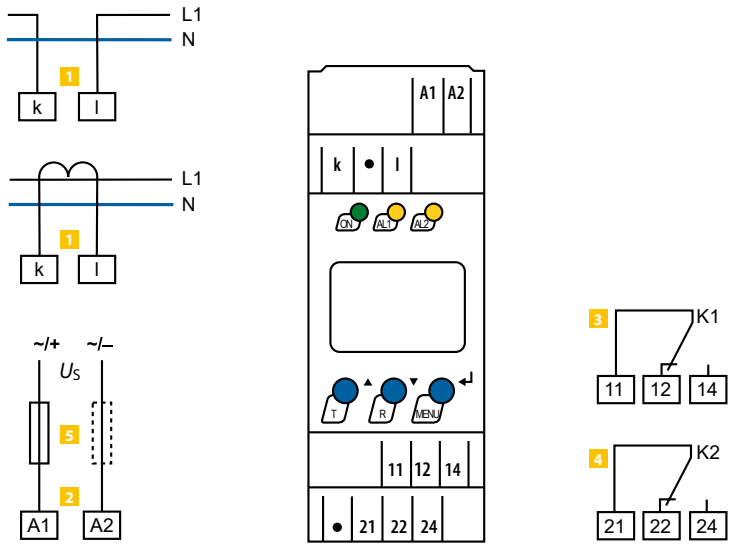

1	**k, l**	Connection to the system/load being monitored
2	**A1, A2**	Supply voltage U_S (see ordering information)
3	**11, 12, 14**	Alarm relay "K1": configurable for *I*<, *I*> or *I*</*I*>/ERROR/TEST
4	**21, 22, 24**	Alarm relay "K2": configurable for *I*< , *I*> or *I*</*I*>/ERROR/TEST
5		Line protection according to IEC 60364-4-43: 6 A fuse recommended. If being supplied from an IT system, both lines have to be protected by a fuse.

LINETRAXX® CMD420/CMD421

Current monitoring relays for monitoring 3AC currents for overcurrent and undercurrent using measuring current transformers or current monitoring with window discriminator function

Typical applications

- Current consumption of motors, such as pumps, elevators, cranes
- Monitoring of lighting circuits, heating circuits, charging stations
- Monitoring of emergency lighting
- Monitoring of screw conveyors, e.g. in sewage plants
- Dust removal in wood working

Approvals

Device features

- Undercurrent and overcurrent monitoring in AC systems, current monitoring with window discriminator function
- Current monitoring using standard current transformers: x/ 1A (CMD420), x/ 5A (CMD421)
- Two separately adjustable alarm relays with one changeover contact each (K1, K2)
- Fault memory behaviour for the alarm relays selectable
- N/C or N/O operation selectable for K1, K2
- Digital measured value display via multi-functional LC display
- LEDs: Power On (ON), Alarm 1 (AL1) and Alarm 2 (AL2)
- Start-up delay, response delay and delay on release
- Adjustable switching hysteresis
- r.m.s. value measurement AC
- History memory for the operating value
- Cyclical self test
- Test and reset button
- Password protection to prevent unauthorised changes being made to device settings
- Sealable transparent cover
- Available with screw-type or push-wire terminals

Further information

For further information refer to our product range on www.bender.de.

Ordering information

Type	Suitable for current transformer types	Response value	Supply voltage [1] U_s	Art. No.	
				Screw-type terminal	Push-wire terminal
CMD420-D-1	x/1A	0.1…1 A x n	AC 16…72 V, 15…460 Hz / DC 9.6 V…94 V	B93060006	B73060006
CMD420-D-2			AC/DC 70…300 V, 15…460 Hz	B93060007	B73060007
CMD421-D-1	x/5A	0.5…5 A x n	AC 16…72 V, 15…460 Hz / DC 9.6 V…94 V	B93060008	B73060008
CMD421-D-2			AC/DC 70…300 V, 15…460 Hz	B93060009	B73060009

[1] Absolute values

Accessories

Description	Art. No.
Mounting clip for screw mounting (1 piece per device)	B98060008

Insulation coordination acc. to IEC 60664-1/IEC 60664-3

CMD420…

Rated insulation voltage	AC 250 V
Rated impulse voltage/pollution degree	6 kV/3
Protective separation (reinforced insulation) between	(A1, A2) -(k, l) -(11, 12, 14) -(21, 22, 24)
Protective separation (reinforced insulation) between	(k1, I1, k2, I2, k3, I3) -(11, 12, 14)
Voltage test acc. to IEC 61010-1	3.536 kV

CMD421…

Rated insulation voltage	AC 250 V
Rated impulse voltage/pollution degree	4 kV/3
Basic insulation between:	(k1, I1, k2, I2, k3, I3) -(A1, A2), (21, 22, 24)
Basic insulation between:	(11, 12, 14) -(21, 22, 24)
Voltage test acc. to IEC 61010-1	2.21 kV

Supply voltage

CMD420-D-1, CMD421-D-1:

Supply voltage U_s	AC 16…72 V/DC 9.6…94 V
Frequency range U_s	15…460 Hz

CMD420-D-2, CMD421-D-2:

Supply voltage U_s	AC/DC 70…300 V
Frequency range U_s	15…460 Hz
Power consumption	≤ 4 VA

Measuring circuit CMD420

Nominal measuring range (r.m.s. value) n = 1	AC 0…1 A
Overload capability, continuous	2 A
Overload capability < 5 s	5 A
Load per measuring input	50 mΩ
Rated frequency f_n	42…2000 Hz

Response values CMD420

Undercurrent Lo /< (Alarm 2) n = 1	AC 0.1…1 A (0.3 A)*
Undercurrent Lo /< (Alarm 1) n = 1	100…200 % (150 %)*
	Take a maximum nominal current of 1 A into consideration!
Overcurrent Hi /> (Alarm 2) n = 1	AC 0.1…1 A (0.3 A)* (Hi)*
Overcurrent Hi /> (Alarm 1) n = 1	50…100 % (50 %)* (Hi)*
Window I_n /> (Alarm 2) n = 1	AC 0.1…1 A (0.3 A)*
Window I_n /< (Alarm 1) n = 1	50…100 % (50 %)*
External current transformer	x/1 A
Transformation ratio n	1…2000 (1)*
Relative uncertainty in the range of 42…460 Hz	±5 %, ±2 digits
Hysteresis	3…40% (15 %)*

Measuring circuit CMD421

Nominal measuring range (r.m.s. value)	AC 0…5 A
Overload capability, continuous	7.5 A
Overload capability < 5 s	with screw-type terminal connection: 20 A
	with push-wire terminals: 12 A
Load per measuring input	3 mΩ
Rated frequency fn	42…460 Hz

Response values CMD421

Undercurrent Lo / < (Alarm 2) n = 1	AC 0.5…5 A (1.5 A)*
Undercurrent Lo / < (Alarm 1) n = 1	100…200 % (150 %)*
	Take a maximum nominal current of 5 A into consideration!
Overcurrent Hi / > (Alarm 2) n = 1	AC 0.5…5 A (1.5 A)* (Hi)*
Overcurrent Hi / > (Alarm 1) n = 1	50…100 % (50 %)* (Hi)*
Window I_n /> (Alarm 2) n = 1	AC 0.5…5 A (1.5 A)*
Window I_n /< (Alarm 1) n = 1	50…100 % (50 %)*
External current transformer	x/5 A
Transformation ratio n	1…2000 (1)*
Relative uncertainty in the range of 42…460 Hz	±5 %, ±2 digits
Hysteresis	3…40% (15 %)*

Time response

Start-up delay t	0…300 s (0.5 s)*
Response delay t_{on1}	0…300 s (1 s)*
Response delay t_{on2}	0…300 s (0 s)*
Delay on release t_{off}	0…300 s (1 s)*
Resolution of setting t, $t_{on1/2}$, t_{off} (0…10 s)	0.1 s
Resolution of setting t, $t_{on1/2}$, t_{off} (10…99 s)	1 s
Resolution of setting t, $t_{on1/2}$, t_{off} (100…300 s)	10 s
Operating time t_{ae}	≤ 130 ms
Response time t_{an}	$t_{an} = t_{ae} + t_{on1/2}$
Device release time t_{re}	≤ 135 ms
Release time t_{off}	$t_{off} = t_{re} + t_{off}$
Recovery time t_b	≤ 300 ms

Displays, memory

Display	LC display, multifunctional, not illuminated
Display range, measured value (r.m.s. value) x transformation ratio n	CMD420: AC 0…1 A x n
	CMD421: AC 0…5 A x n
Operating uncertainty in the range of 42…460 Hz	±5 %, ±2 digit
Measured-value memory (HiS) for the first alarm value	data record measured values
Password	on/off/0…999 (OFF)*
Fault memory (M) alarm relay	on/off/con (on)*

Switching elements

Number	2 x 1 changeover contacts (K1, K2)
Operating principle	N/C operation/N/O operation
K1:	Err, I1, I2, tES (device error Err, overcurrent prewarning > I1, test button tES)*
K2:	Err, I1, I2, tES (device error Err, overcurrent alarm > I2, test button tES)*
Electrical endurance, number of cycles	10,000

Contact data acc. to IEC 60947-5-1

Utilisation category	AC-13	AC-14	DC-12	DC-12	DC-12
Rated operational voltage	230 V	230 V	24 V	110 V	220 V
Rated operational current	5 A	3 A	1 A	0.2 A	0.1 A
Minimum contact rating	1 mA at AC/DC ≥ 10 V				

Environment/EMC

EMC	IEC 61326-1
Operating temperature	-25…+55 °C

Classification of climatic conditions acc. to IEC 60721 (related to temperature and relative humidity)**:**

Stationary use (IEC 60721-3-3)	3K22
Transport (IEC 60721-3-2)	2K11
Storage (IEC 60721-3-1)	1K22

Classification of mechanical conditions acc. to IEC 60721

Stationary use (IEC 60721-3-3)	3M11
Transport (IEC 60721-3-2)	2M4
Storage (IEC 60721-3-1)	1M12

Connection

Connection type	screw-type terminal or push-wire terminal

Connection	**screw terminals**
Connection properties	
rigid	0.2…4 mm² (AWG 24- 12)
flexible	0.2…2.5 mm² (AWG 24-14)
Two conductors with the same cross section	
rigid/flexible	0.2…1.5 mm² (AWG 24-16)
Stripping length	8 mm
Tightening torque, terminal screws	0.5…0.6 Nm

Connection	**push-wire terminals**
Connection properties	
rigid	0.2…2.5 mm² (AWG 24-14)
flexible	
without ferrules	0.75…2.5 mm² (AWG 19-14)
with ferrules	0.2…1.5 mm² (AWG 24-16)
Stripping length	10 mm
Opening force	50 N
Test opening, diameter	2.1 mm

Other

Operating mode	continuous operation
Mounting	any position
Degree of protection, internal components (IEC 60529)	IP30
Degree of protection, terminals (IEC 60529)	IP20
Enclosure material	polycarbonate
Flammability class	UL94 V-0
DIN rail mounting acc. to	IEC 60715
Screw mounting	2 x M4 with mounting clip
Documentation number	D00101
Weight	≤ 150 g

( )* = factory setting

Dimension diagram (dimensions in mm)

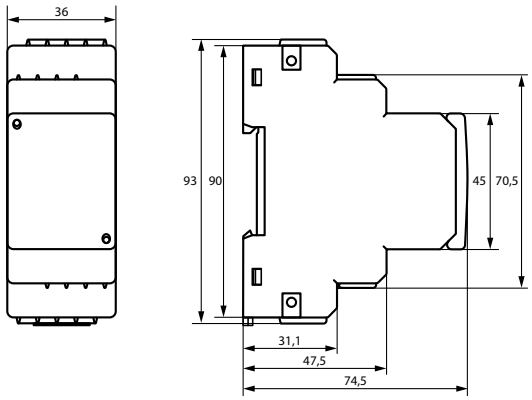

Wiring diagram

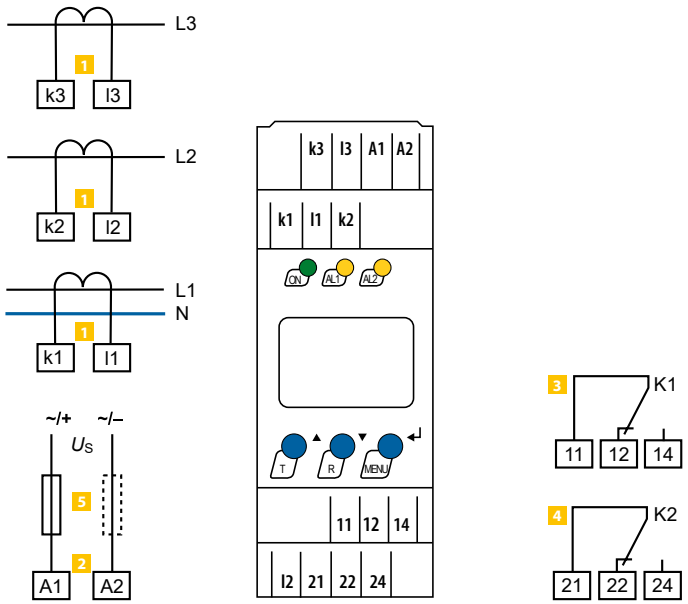

1	**k, l**	Connection to the conductors to be monitored; using current transformers
2	**A1, A2**	Supply voltage U_S (see ordering information)
3	**11, 12, 14**	Alarm relay "K1": configurable for *I*<, *I*> or *I*</*I*>/ERROR/TEST
4	**21, 22, 24**	Alarm relay "K2": configurable for alarm *I*<, *I*> or *I*</*I*>/ERROR/TEST
5		Line protection according to IEC 60364-4-43: 6 A fuse recommended. If being supplied from an IT system, both lines have to be protected by a fuse.

LINETRAXX® CMS460-D

Multi-channel AC, pulsed DC sensitive load current evaluator
for AC systems (TN, TT and IT systems)

Typical applications

- Monitoring of loads and installations for load currents in the frequency range of 42…2000 Hz (measuring current transformers CTAC…, WR…S(P), WS…, WF…)
- Monitoring of currents regarded as fire hazards in flammable atmospheres
- EMC monitoring of TN systems for "stray currents" and additional N-PE connections
- Monitoring of N conductors for overload caused by harmonics
- Monitoring of PE and equipotential bonding conductors to ensure they are free of current

Approvals

Device features

- Optional AC or pulsed DC sensitive measurements for each channel
- rms value measurement
- 12 measuring channels per individual device for load current
- Up to 90 evaluators CMS460-D in the system (1080 measuring channels)
- Fast parallel scanning for all channels
- Response ranges 100 mA…125 A (42…2000 Hz)
- Preset function
- Adjustable time delays
- Adjustable frequency behaviour (e.g. fire and plant protection)
- History memory with date and time stamp for 300 data records/channel
- Data logger for 300 data records/channel
- Analysis of the harmonics, THD
- Two alarm relays with one changeover contact each
- N/O or N/C operation and fault memory selectable
- Connection external test and reset button
- Backlit graphical display (7-segment display) and alarm LEDs
- Data exchange via BMS bus
- Password protection for device setting
- RoHS compliant

Further information

For further information refer to our product range on www.bender.de.

Ordering information

Type	Supply voltage [1] U_s	Art. No.
CMS460-D-1	AC 16…72 V, 42…460 Hz / DC 16…94 V	B94053017
CMS460-D-2	AC 70…276 V, 42…460 Hz / DC 70…276 V	B94053018

[1] Absolute values

Accessories

Description	Art. No.
XM460 mounting frame, 144 x 82 mm	B990995

Suitable system components

Description	Version	Type of construction	Type	Art. No.	Page
Measuring current transformers	pulsed DC sensitive	circular	CTAC…	B981100…	348
		rectangular	WR…S(P)	B9117…	355
		split-core	WS…	B980806…	362
		flexible	WF…	B780802…	366
Condition Monitor	with integrated gateway: Bender system/Ethernet	–	COM465IP	B950610…	394
		–	CP9…-I	B9506103…	408
RS-485 repeater	–	–	DI-1DL	B95012047	389

Insulation coordination acc. to IEC 60664-1/IEC 60664-3 for the versions:

a) CMS460-D1

Supply voltage U_s	DC 24…75V/AC 24…60 V (AC/DC ±20 %)
Supply voltage frequency	DC, 50/60 Hz
Rated insulation voltage	100 V
Overvoltage category/pollution degree	III/3
Rated impulse voltage	2.5 kV
Protective separation (reinforced insulation) between	(A1, A2) - (k1, I…k12, R, T/R, T, A, B)
Voltage test acc. to IEC 61010-1	1.344 kV
Rated insulation voltage	250 V
Overvoltage category/pollution degree	III/3
Rated impulse voltage	4 kV
Basic insulation between:	(A1, A2), (k1, I…k12, R, T/R, T, A, B) - (C11, C12, C14), (C21, C22, C24), (11,14), (21,24), (31,34), (41,44), (51,54), (61,64), (71,74), (81,84), (91,94),(101,104), (111,114), (121,124)
Basic insulation between:	(11, 14) - (21, 24) - (31, 34) - (41, 44) - (51, 54) - (61, 64)
Voltage test acc. to IEC 61010-1	2.21 kV
Rated insulation voltage	250 V
Overvoltage category/pollution degree	III/3
Rated impulse voltage	6 kV
Protective separation (reinforced insulation) between	(C11, C12, C14) - (C21, C22, C24) - (11, 14, 21, 24, 31, 34) - (41, 44, 51, 54, 61, 64) - (71,74) - (81,84) - (91,94) - (101,104) - (111,114) - (121,124)
Voltage test acc. to IEC 61010-1	3.536 kV

b) CMS460-D2

Supply voltage U_s	AC/DC 100…240 V (-20…+15 %)
Supply voltage frequency	DC, 50/60 Hz
Rated insulation voltage	250 V
Overvoltage category/pollution degree	III/3
Rated impulse voltage	6 kV
Protective separation (reinforced insulation) between	(A1, A2) - (k1, I…k12, R, T/R, T, A, B), (C11, C12, C14), (C21, C22, C24), (11,14), (21,24), (31,34), (41,44), (51,54), (61,64), (71,74), (81,84), (91,94),(101,104), (111,114), (121,124)
Protective separation (reinforced insulation) between	(C11, C12, C14) - (C21, C22, C24) - (11, 14, 21, 24, 31, 34) - (41, 44, 51, 54, 61, 64) - (71,74) - (81,84) - (91,94) - (101,104) - (111,114) - (121,124)
Voltage test acc. to IEC 61010-1	3.536 kV
Rated insulation voltage	250 V
Overvoltage category/pollution degree	III/3
Rated impulse voltage	4 kV
Basic insulation between:	k1, I…k12, R, T/R, T, A, B) - (C11, C12, C14), (C21, C22, C24)
Basic insulation between:	(11, 14) - (21, 24) - (31, 34) - (41, 44) - (51, 54) - (61, 64)
Voltage test acc. to IEC 61010-1	2.21 kV

Measuring circuit

External measuring current transformers	CTAC…, WR…, WS…, WF… series (type A)
Load	1 Ω
Rated insulation voltage (measuring current transformer)	800 V
Operating characteristics acc. to IEC 60755	type A depending on measuring current transformer series (type A)*
Rated frequency	42…2000 Hz (type A)
Cut-off frequency	none, IEC, 50 Hz, 60 Hz (none)*
Measuring range	100 mA…125 A (measuring current transformer type A) 100 mA…30 A (measuring current transformer Flex) Crest factor up to 10 A = 4, up to 125 A = 2
Rated operating current In2 (alarm)	100 mA…125 A (16 A overcurrent)*
Rated operating current In1 (prewarning)	10…100 % x In2*
Preset for alarm	offset: 0…20 A (1 A)* and I x factor 1…99 (3)*
Relative uncertainty	+10…-20 %
Hysteresis	2…40% (20 %)*
Factor for additional CT	/2…10; x 1…10 (x 1)*
Number of measuring channels (per device/system)	12/1080

Time response

Start-up delay t(start-up) per device	0…99 s (0 ms)*
Response delay t_{on} per channel	0…999 s (200 ms)*
Delay on release t_{off} per channel	0…999 s (200 ms)*
Operating time t_{ae} at $I_n = 1 \times I_{n1/2}$	≤ 180 ms
Operating time t_{ae} at $I_n = 5 \times I_{n1/2}$	≤ 30 ms
Response time t_{an} for current measurement	$t_{an} = t_{ae} + t_{on1/2}$
Scanning time for all measuring channels (current measurement)	≤ 180 ms
Recovery time t_b	500…600 ms

Displays, memory

Display range, measuring value	< 10 mA…125 A (CT type A) < 10 mA…30 A (measuring current transformer Flex)
Operating uncertainty	± 10 %
LEDs	ON/ALARM
LC display	backlit graphical display
History memory	300 data records
Data logger	300 data records per measuring channel
Password	off/0…999 (off)*
Language	D, GB, F (GB)*
Fault memory alarm relay	on/off (off)*

Inputs/outputs

Test/reset button	internal/external
Cable length for external test/reset button	0…10 m

Interface

Interface/protocol	RS-485/BMS
Baud rate	9.6 kbit/s
Cable length	0…1200 m
Recommended cable (shielded, shield connected to PE on one side)	min. J-Y(St) min. 2x0.8
For UL applications:	Copper lines at least 60/70 °C
Terminating resistor	120 Ω (0.25 W) connectable via DIP switch
Device address, BMS bus	1…90 (2)*

Cable lengths for CTAC…, WR…, WS…, WF… series measuring current transformers

Single wire ≥ 0.75 mm²	0…1 m
Single wire, twisted ≥ 0.75 mm²	0…10 m
Shielded cable ≥ 0.5 mm²	0…40 m
Recommended cable (shielded, shield connected to terminal l at one end, must not be earthed)	J-Y(St)Y min. 2x0.8

Switching elements

Number of changeover contacts	2 x 1 changeover contacts
Operating principle	N/C or N/O operation (N/O operation)*
Electrical endurance, number of cycles	10,000

Contact data acc. to IEC 60947-5-1

Utilisation category	AC-13	AC-14	DC-12	DC-12	DC-12
Rated operational voltage	230 V	230 V	24 V	110 V	220 V
Rated operational current (common alarm relay)	5 A	3 A	1 A	0.2 A	0.1 A
Rated operational current (alarm relay)	2 A	0.5 A	5 A	0.2 A	0.1 A
Minimum contact rating	1 mA at AC/DC ≥ 10 V				

Environment/EMC

EMC	IEC 61326-1
Operating temperature	-25 °C

Classification of climatic conditions acc. to IEC 60721 (related to temperature and relative humidity)**:**

Stationary use (IEC 60721-3-3)	3K22
Transport (IEC 60721-3-2)	2K11
Long-term storage (IEC 60721-3-1)	1K22

Classification of mechanical conditions acc. to IEC 60721

Stationary use (IEC 60721-3-3)	3M11
Transport (IEC 60721-3-2)	2M4
Long-term storage (IEC 60721-3-1)	1M12

Connection

Connection	screw-type terminals
Connection properties:	
Rigid/flexible/conductor sizes	0.2…4/0.2…2.5 mm²/AWG 24-12
Multi-conductor connection (2 conductors with the same cross section):	
Rigid/flexible	0.2…1.5/0.2…1.5 mm²
Stripping length	8…9 mm
Tightening torque	0.5…0.6 Nm

Other

Operating mode	continuous operation
Mounting	display-oriented
Degree of protection, internal components (IEC 60529)	IP30
Degree of protection, terminals (IEC 60529)	IP20
Enclosure material	polycarbonate
Flammability class	UL94V-0
Screw fixing	2 x M4
DIN rail mounting acc. to	IEC 60715
Power consumption	≤ 10 VA
Weight	≤ 360 g

( )* Factory setting

Dimension diagrams (dimensions in mm)

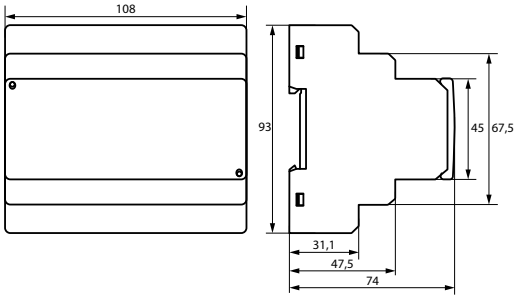

Wiring diagrams

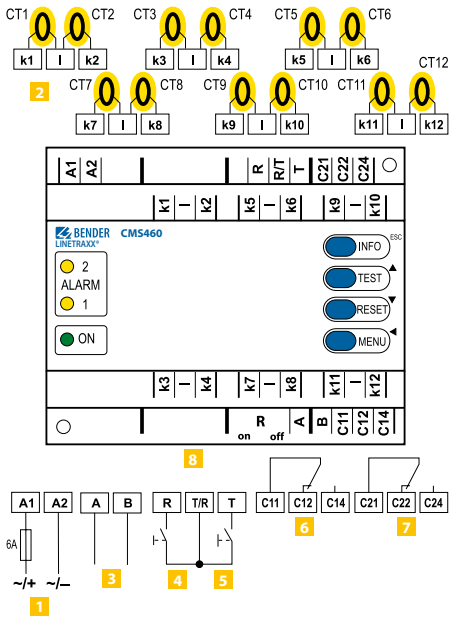

1	**A1, A2**	Connection of supply voltage U_S (see ordering information), 6 A fuse recommended.
2	**I, k1…k12**	Connection of measuring current transformers CT1…CT12
3	**A, B**	RS-485 interface with BMS protocol
4	**R**	External reset button "R" (N/O contact)
5	**T, T/R**	External test button "T" (N/O contact). The external "T/R" buttons of several devices must not be connected to one another.
6	**C11, C12, C14**	Alarm relay "K1": Alarm 1, common alarm for alarm, prewarning, device error, ext. alarm (adjustable)
7	**C21, C22, C24**	Alarm relay "K2": Alarm 2, common alarm for alarm, prewarning, device error, ext. alarm (adjustable)
8	**$R_{on/off}$**	Activate or deactivate the BMS bus terminating resistor (120 Ω)

Connection CTAC…, WR…S(P), WS… series measuring current transformers (pulsed DC sensitive)

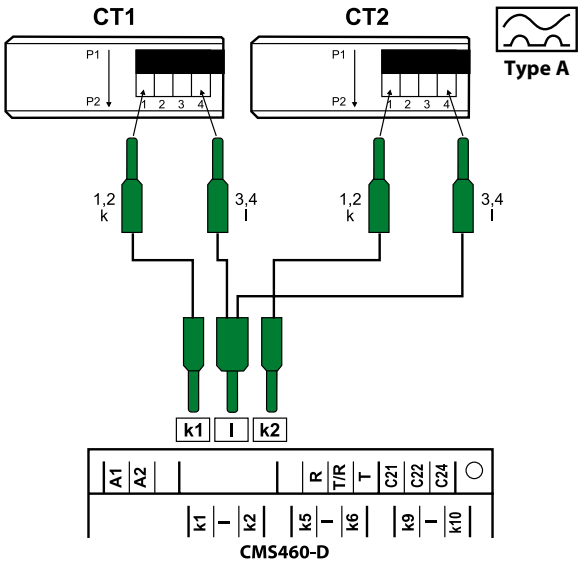

Connection WF… series measuring current transformer (pulsed DC sensitive)

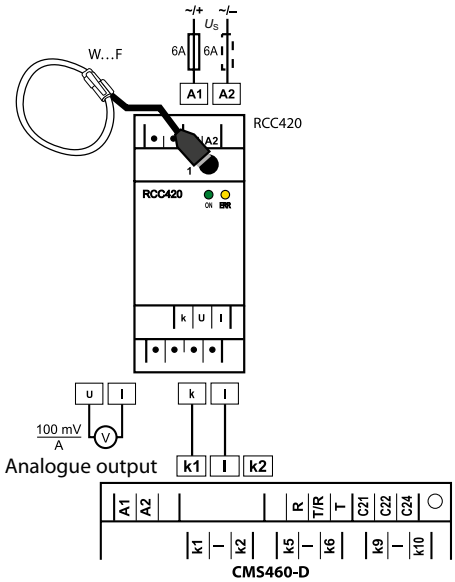

LINETRAXX® GM420

Loop monitoring relay to monitor loop resistances or PE conductor connections

Typical applications

- Loop monitoring of motors
- Loop monitoring of PE conductor connections for wire interruptions in electrical installations
- Monitoring of earthing systems

Approvals

Device features

- Loop monitoring of the PE conductor in AC systems
- Measuring circuit providing a high resistance against extraneous voltages and indication of extraneous voltages
- Adjustable start-up delay, response delay and delay on release
- Adjustable switching hysteresis
- Digital measured value display via multi-functional LC display
- Preset function (automatic setting of basic parameters)
- LEDs: Power On, Alarm 1, Alarm 2
- Measured value memory for operating value
- Continuous self monitoring
- Internal test/reset button
- Two separate alarm relays with one changeover contact each
- N/C or N/O operation and fault memory behaviour selectable
- Password protection for device setting
- Sealable transparent cover
- Two-module enclosure (36 mm)
- Push-wire terminal (two terminals per connection)
- RoHS compliant

Further information

For further information refer to our product range on www.bender.de.

Ordering information

Type	Supply voltage 1) Us	Art. No.	
		Screw-type terminal	Push-wire terminal
GM420-D-1	AC 16…72 V, 15…460 Hz / DC 9.6…94 V	B93082001	B73082001
GM420-D-2	AC 70…300 V, 15…460 Hz / DC 70…300 V	B93082002	B73082002

1) Absolute values

Accessories

Description	Art. No.
Mounting clip for screw mounting (1 piece per device)	B98060008

Insulation coordination acc. to IEC 60664-1/IEC 60664-3

Rated insulation voltage	400 V
Rated impulse voltage/pollution degree	4 kV/3
Protective separation (reinforced insulation) between:	(A1, A2) - (E, KE) - (11-12-14) - (21-22-24)
Voltage test acc. to IEC 61010-1:	
(E, KE) - [(A1-A2), (11-12-14)]	3.32 kV
(E, KE) - (21-22-24)	2.21 kV
(A1- A2) - (11-12-14) - (21-22-24)	2.21 kV

Supply voltage

GM420-D-1

Supply voltage U_s	AC 16…72 V / DC 9.6…94 V
Frequency range U_s	15…460 Hz

GM420-D-2:

Supply voltage U_s	AC/DC 70…300 V
Frequency range U_s	15…460 Hz
Power consumption	≤ 3.5 VA

Measuring circuit

Loop resistance R_m:

Measuring range R_m	0…100 Ω
Measuring current I_m	DC 20 mA
Measuring voltage U_m	≤ DC 24 V

Extraneous voltage U_f:

Measuring range U_f	AC 0…50 V
Rated frequency f_n	42…460 Hz
Disconnection of the measuring loop at U_f	≥ 12 V
Reconnection of the measuring loop	≤ 10 V
Permissible extraneous voltage U_f	≤ 440 V
Permissible extraneous DC voltage, without influence on the measurement	DC 0 V

Response values

Loop resistance > *R* (Alarm 1)	0.1…100 Ω
Resolution of setting *R* = 0…10 Ω	0.1 Ω
Resolution of setting *R* = 10…100 Ω	1 Ω

Preset function:

Loop resistance (> *R*) =	((R_m + 0.5 Ω) x 1.5)*
Relative uncertainty 0…1 Ω	±20 %, ±1 digit
Relative uncertainty 1…100 Ω	±5 %, ±1 digit
Hysteresis > *R*	1…40 % (25 %)*
Extraneous voltage > *U* (Alarm 2)	1…50 V (25 V)*
Resolution of setting U_f 1…50 V	0.5 V
Relative uncertainty Uf (> U) in the range of 50/60 Hz	±2 %, ±1 digit
Relative uncertainty U_f (> *U*) in the range of 42…460 Hz	±10 %, ±1 digit
Hysteresis > *U*	1…40 % (5 %)*

Time response

Start-up delay *t*	0…99 s (0 s)*
Response delay $t_{on1/2}$	0…99 s (0 s)*
Delay on release t_{off}	0…99 s (0.5 s)*
Operating time t_{ae}	
in the case of loop interruption (*R* > 50 kΩ)	≤ 40 ms
in the case of closed loop (> *R*) t_{ae}	≤ 500 ms
in case of extraneous voltage (> *U*) and overload (OL) t_{ae}	≤ 100 ms
Response time t_{an}	$t_{an} = t_{ae} + t_{on1/2}$
Recovery time t_b	≤ 300 ms
Recovery time t_b after safety shutdown	≤ 1 s

Displays, memory

Display	LC display, multifunctional, not illuminated
Display range, measuring value R_m	0…100 Ω
Display range, measuring value U_f	AC 0…50 V
Operating uncertainty	
loop resistance 0…1 Ω	±20 %, ±1 digit
operating uncertainty loop resistance 1…100 Ω	±5 %, ±1 digit
operating uncertainty voltage in the range of 50/60 Hz	±2 %, ±1 digit
operating uncertainty voltage in the range of 42…460 Hz	±10 %, ±1 digits
History memory (HiS) for the first alarm value	data record measured values
Password	off/0…999 (off)*
Fault memory (M) alarm relay	on/off (on)*

Switching elements

Number	2 x 1 changeover contacts (K1, K2)
Operating principle	N/C operation or N/O operation K1: Err, > *R*, OL, > *U*, tES (device error, loop resistance, measuring current disconnection: N/O operation n.o.)* K2: Err, > *R*, OL, > *U*, tES (overvoltage: N/O operation n.o.)*
Electrical endurance, number of cycles	10000

Contact data acc. to IEC 60947-5-1

Utilisation category	AC 13	AC 14	DC-12	DC-12	DC-12
Rated operational voltage	230 V	230 V	24 V	110 V	220 V
Rated operational current	5 A	3 A	1 A	0.2 A	0.1 A
Minimum contact rating	1 mA at AC/DC ≥ 10 V				

Environment/EMC

EMC	IEC 61326

Ambient temperature

Operating temperature	-25…+55 °C
Transport	-25…+70 °C
Long-term storage	-25…+55 °C

Classification of climatic conditions acc. to IEC 60721 (related to temperature and relative humidity)**:**

Stationary use (IEC 60721-3-3)	3K22
Transport (IEC 60721-3-2)	2K11
Long time storage (IEC 60721-3-1)	1K22

Climatic class acc. to IEC 60721

Stationary use (IEC 60721-3-3)	3M11
Transport (IEC 60721-3-2)	2M4
Long-time storage (IEC 60721-3-1)	1M12

Connection

Connection type	screw-type terminal or push-wire terminal
Connection	**screw terminals**
Connection properties	
rigid	0.2…4 mm² (AWG 24- 12)
flexible	0.2…2.5 mm² (AWG 24-14)
Two conductors with the same cross section	
rigid/flexible	0.2…1.5 mm² (AWG 24-16)
Stripping length	8…9 mm
Tightening torque, terminal screws	0.5…0.6 Nm
Connection	**push-wire terminals**
Connection properties	
rigid	0.2…2.5 mm² (AWG 24-14)
flexible	
without ferrules	0.75…2.5 mm² (AWG 19-14)
with ferrules	0.2…1.5 mm² (AWG 24-16)
Stripping length	10 mm
Opening force	50 N
Test opening, diameter	2.1 mm

Other

Operating mode	continuous operation
Mounting	any position
Degree of protection, internal components (IEC 60529)	IP30
Degree of protection, terminals (IEC 60529)	IP30
Enclosure material	polycarbonate
Screw mounting	2 x M4 with mounting clip
DIN rail mounting acc. to	IEC 60715
Flammability class	UL94 V-0
Software version	D268 V1.0x
Documentation number	D00112
Weight	≤ 150 g

( )* = factory setting

Dimension diagram (dimensions in mm)

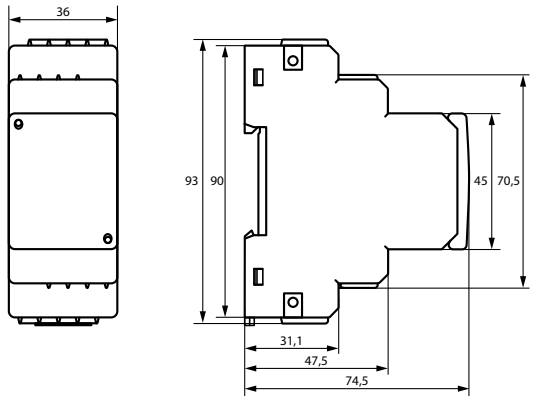

Wiring diagram

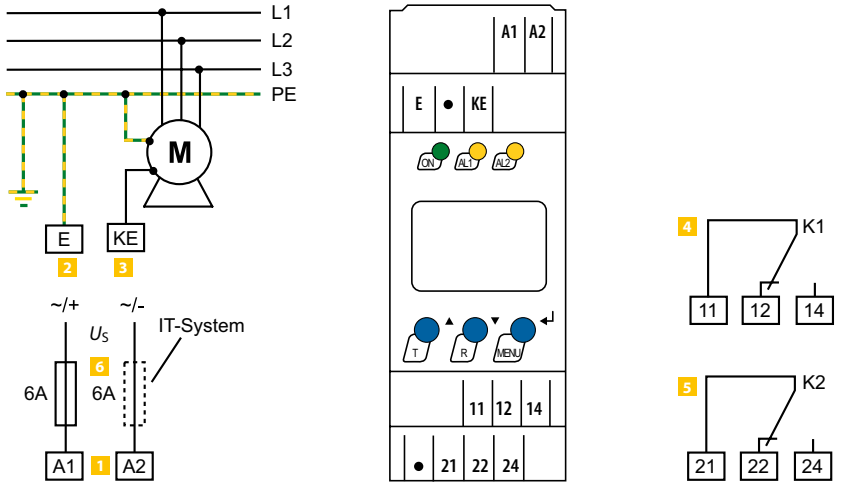

1	**A1, A2**	Supply voltage U_S (see ordering details) via fuse
2	**E**	Connection of E to the PE conductor
3	**KE**	Connection of KE to the loads or the monitoring conductor
4	**11, 12, 14**	Alarm relay "K1": Alarm 1 configurable for > *R*, OL, > U_f, ERROR, TEST
5	**21, 22, 24**	Alarm relay "K2": Alarm 2 configurable for > *R*, OL, > U_f, ERROR, TEST
6		Line protection by a fuse in accordance with DIN VDE 0100-430/ IEC 60364-4-43 (6 A fuse recommended). In case of supply (A1/A2) from an IT system, both lines have to be protected by a fuse.

RC48C

Residual current/loop monitoring device

Typical applications

- Monitoring cables that feature a pilot wire
- Monitoring of earthing systems

Approvals

Device features

- Earth fault monitor with integrated loop monitoring
- Measurement of the fault current by means of a Bender measuring current transformer
- Alarm easily recognisable by LED lights
- Alarm relay with two voltage-free changeover contacts
- Alarm contact can be delayed by a selectable time
- Detection of series and transverse resistance faults
- The alarm relay can be used to trigger a load switch
- Depending on the type of load switch, the operating mode of the alarm relay can be set to normally open or normally closed operation

Standard

- CSA M421-16
- NEC 250.188(D)

Further information

For further information refer to our product range on www.bender.de.

Ordering information

Type	Supply voltage U_s	Supply voltage U_s für UL	Art. No.
RC48C-935	AC/DC 60…264 V, 50…60 Hz	AC/DC 110…240 V, 50/60 Hz	B94013002

Accessories

Description	Art. No.
Termination device for RC48C, P = 5 W (without an enclosure)	B94013008
Termination device for RC48C, P = 50 W (without an enclosure)	B94013009
Termination device for RC48C, P = 50 W	B94013006
Termination device for RC48C with an integrated resistor for remote disconnection, P = 50 W	B94013007

Suitable system components

Description	Inside diameter	Type	Art. No.	Seite
Remote alarm indicator and test combination	–	RI2000GC	B94071000	–
Residual current transformer	70 mm	W2-S70	B911732	**346**
	105 mm	W3-S105	B911733	**346**

Insulation coordination acc. to IEC 60664-1:

Rated insulation voltage	AC 250 V
Rated impulse voltage/pollution degree	2.5 kV/3

Voltage ranges

Supply voltage U_s	AC/DC 60…264 V, 50…60 Hz
For UL:	
Supply voltage U_s	AC/DC 110…240 V, 50/60 Hz
Fuse	recommended: 6 A slow fuse
Power consumption	approx. 5 VA at AC 60 V approx. 8.5 VA at AC 264 V

Residual current monitoring

Response value, residual current	adjustable 0.1…1 A or 1…10 A
Accuracy of $I_{\Delta n}$ / A, (valid for setting ranges x1 and x10)	
at position "0.1" and "1"	0…−25 %
at position "0.3", "0.5" and "0.7"	±20 %
Response delay	selectable 0.1…2 s
Accuracy of the response delay	±20 %
Continuous short-circuit current	200 A 2500 A for 2 seconds
Operating mode	latching

Ground conductor monitoring

Response value, series resistance fault	40 Ω
Accuracy	±10 Ω
Open-circuit voltage	DC 12 V
Output impedance	240 Ω
Rated current of the measuring loop	DC 25 mA
Protection against extraneous voltage	AC 25 V continuous AC 120 V for 3 s
Delay on release	1.5 s
Response time, series resistance faults	0.2 s
Response time, cross resistance faults	0.2 s
Accuracy of the response time	±20 %
Operating mode	no latching

Inputs

Connection to the residual current transformer	
Single wire 0.75 mm² (AWG 18)	up to 1 m (3')
Single wire, twisted 0.75 mm² (AWG 18)	1…10 m (3…30')
Shielded cable 0.75 mm² (AWG 18) (shield to ground)	10…25 m (30…75')
Connection to the RI2000GC remote alarm indicator and test combination	
Single wire 0.75 mm² (AWG 18)	0…10 m (0…30')

Outputs

Switching elements (alarm relay)	2 changeover contacts (N/O and N/C, Form C)
Rated contact voltage	AC 250 V/DC 300 V
Making capacity	AC/DC 5 A
Breaking capacity AC/DC	2/0.2 A
Permissible number of operating cycles	12000 cycles
Operating mode, switching elements (alarm relay)	Fail-Safe
Switching elements (GFA, GCS)	2 NO contacts
Rated contact voltage	AC 250 V/DC 300 V
Making capacity	AC/DC 5 A
Breaking capacity AC/DC	2/0.2 A
Permissible number of operating cycles	12000 cycles

Type tests

Test of the electromagnetic compatibility (EMC)	
Immunity	according to IEC 62020
Emission	according to EN 50081
Emissions according to EN 55011/CISPR11	class A

Environment

Ambient temperature, during operation	-40…+60 °C
Ambient temperature, for storage	-55…+80 °C
Climatic class acc. to IEC 60721 (except condensation and formation of ice)	3K22

Connection

Connection type	screw-type terminals
Connection properties rigid	0.2…4 mm² (AWG 24-12)
Connection properties flexible	0.2…2.5 mm² (AWG 24-14)

Other

Operating mode	continuous operation
Mounting	any position
Protection class	according to DIN EN 60529
Built-in components	IP 30
Terminals	IP 20
Flammability class	UL94V-0
Documentation number	D00318
Weight	approx. 360 g

Dimension diagram (dimensions in mm (in))

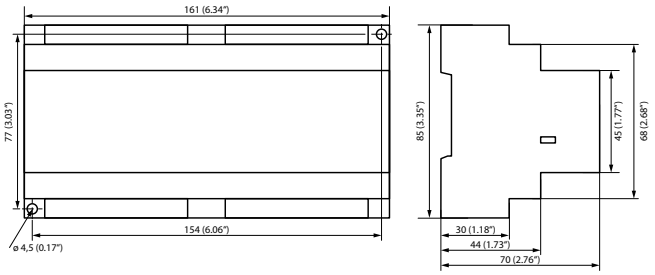

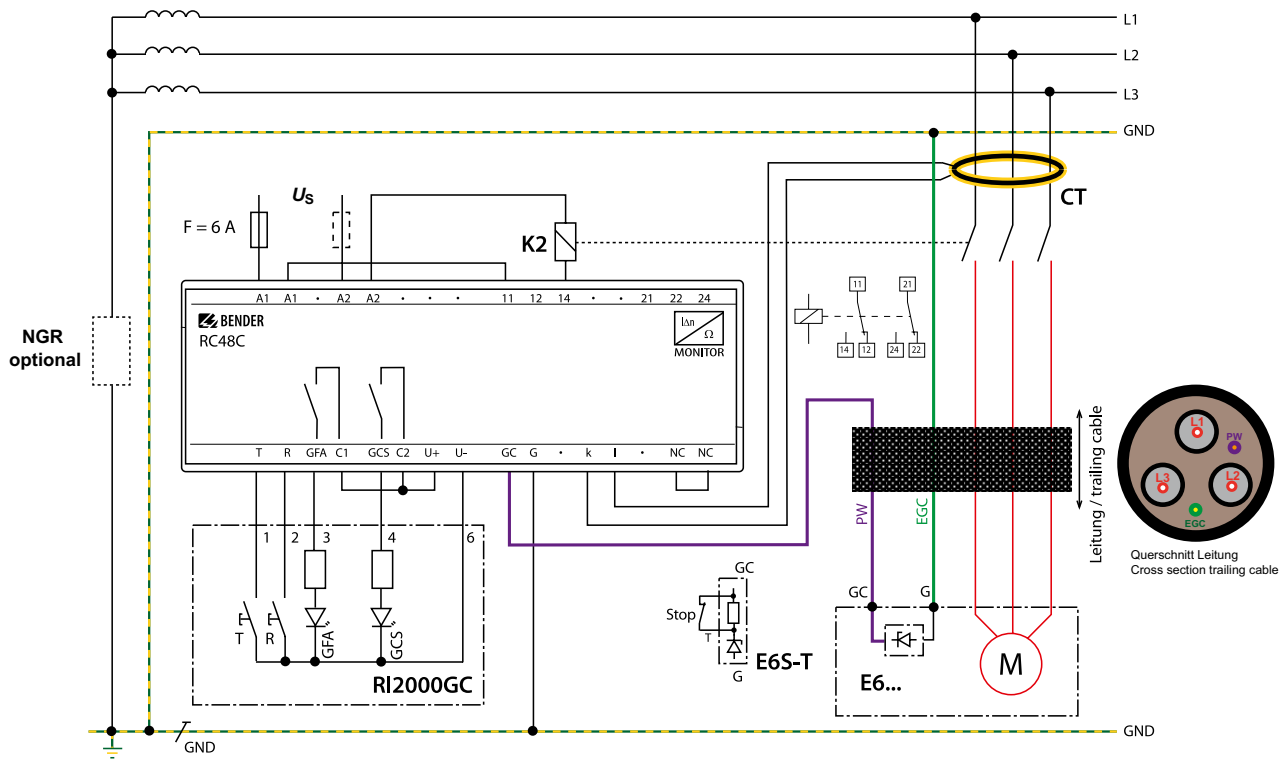

Connections

A1, A2	Connection supply voltage U_S.
11, 12, 14 **21, 22, 24**	Two voltage-free changeover contacts trip in case of an alarm. N/C operation or N/O operation selectable.
NC, NC	Set contact configuration for voltage-free changeover contacts: Bridge open: N/O Bridge closed: N/C (factory setting)
k, l	Connection residual current transformer
GC	Connection to the PW (pilot wire) conductor of the cable
G	Connection to the EGC (equipment grounding conductor = GND) conductor of the cable.

Connection to the RI2000GC remote alarm indicator and test combination

T	Connection external Test button
R	Connection external Reset button
GFA	Connection external “Alarm Ground Fault” LED
GCS	Connection external “Ground Check Safe” LED
U+, U-	Output DC 12 V, e.g. for the supply of the RI2000GC remote alarm indicator and test combination
C1, C2, U+	Bridge supplying the RI2000GC remote alarm indicator and test combination with supply voltage from the RC48C.

Device overview measuring current transformers

																										
		W0-S20…W5-S210, W10/600							CTAC…					CTUB100-CTBC…												
Catalogue page		340							342					345												
Characteristics																										
CT type		W10/600	W0-S20	W1-S35	W2-S70	W3-S105	W4-S140	W5-S210	CTAC20(/01)	CTAC35(/01)	CTAC60	CTAC120	CTAC210	CTUB101-CTBC20(P)	CTUB101-CTBC35(P)	CTUB101-CTBC60(P)	CTUB101-CTBC120(P)	CTUB101-CTBC210(P)	CTUB102-CTBC20(P)	CTUB102-CTBC35(P)	CTUB102-CTBC60(P)	CTUB102-CTBC120(P)	CTUB102-CTBC210(P)	CTUB104-CTBC20(P)	CTUB104-CTBC35(P)	CTUB104-CTBC60(P)
Dimensions (mm)	Inside diameter	10	20	35	70	105	140	210	20	35	60	120	210	20	35	60	120	210	20	35	60	120	210	20	35	60
	Width x height	–	–	–	–	–	–	–	–	–	–	–	–	–	–	–	–	–	–	–	–	–	–	–	–	–
	Strip length	–	–	–	–	–	–	–	–	–	–	–	–	–	–	–	–	–	–	–	–	–	–	–	–	–
Device family	EDS440	✓	✓	✓	✓	✓	✓	✓	✓	✓	✓	✓	✓	–	–	–	–	–	–	–	–	–	–	–	–	–
	EDS441	–	–	–	–	–	–	–	✓	✓	✓	✓	✓	–	–	–	–	–	–	–	–	–	–	–	–	–
	EDS441-LAB	–	–	–	–	–	–	–	–	–	–	–	–	–	–	–	–	–	–	–	–	–	–	✓	✓	✓
	RCM420	✓	✓	✓	✓	✓	✓	✓	✓	✓	✓	✓	✓	–	–	–	–	–	–	–	–	–	–	–	–	–
	RCMA420	–	–	–	–	–	–	–	–	–	–	–	–	✓	✓	✓	–	–	–	–	–	–	–	–	–	–
	RCMA423	–	–	–	–	–	–	–	–	–	–	–	–	✓	✓	✓	✓	✓	–	–	–	–	–	–	–	–
	RCMS460/490	✓	✓	✓	✓	✓	✓	✓	✓	✓	✓	✓	✓	✓	✓	✓	✓	✓	✓	✓	✓	✓	✓	–	–	–
	RCMS410	–	✓	✓	✓	✓	✓	✓	✓	✓	✓	✓	✓	✓	✓	✓	✓	✓	✓	✓	✓	✓	✓	✓	✓	✓
	NGRM…	–	–	–	–	–	–	–	–	✓	✓	–	–	–	–	–	–	–	–	–	–	–	–	–	–	–
Product details (Products on www.bender.de/en)																										

					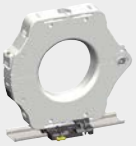																		
	WR…S(P)				**CTAS…**			**CTBS25**	**WS…/WS…-8000**					**WS…S**				**WF…**					
	349				**351**			**354**	**356**					**358**				**360**					
					split-core			split-core	split-core					split-core				flexible					
	WR70x175S(P)	WR115x305S(P)	WR150x350S(P)	WR200x500S(P)	CTAS50(/01)	CTAS80(/01)	CTAS120(/01)	CTBS25	WS20x30	WS50x80	WS80x120	WS20x30-8000	WS50x80-8000	WS50x80S	WS80x80S	WS80x120S	WS80x160S	WF170	WF250	WF500	WF800	WF1200	WF1800
	–	–	–	–	50	80	120	25	–	–	–	–	–	–	–	–	–	–	–	–	–	–	–
	70 x 175	115 x 305	150 x 350	200 x 500	–	–	–	–	20 x 30	50 x 80	80 x 120	20 x 30	50 x 80	50 x 80	80 x 80	80 x 120	80 x 160	–	–	–	–	–	–
	–	–	–	–	–	–	–	–	–	–	–	–	–	–	–	–	–	170	250	500	800	1200	1800
	✓	✓	✓	✓	✓	✓	✓	✓	✓	✓	✓	–	–	–	–	–	–	–	–	–	–	–	–
	–	–	–	–	✓	✓	✓	–	–	–	–	✓	✓	–	–	–	–	–	–	–	–	–	–
	–	–	–	–	–	–	–	–	–	–	–	✓	✓	–	–	–	–	–	–	–	–	–	–
	✓	✓	✓	✓	✓	✓	✓	–	✓	✓	✓	–	–	✓	✓	✓	✓	✓	✓	✓	✓	✓	✓
	–	–	–	–	–	–	–	–	–	–	–	–	–	–	–	–	–	–	–	–	–	–	–
	–	–	–	–	–	–	–	–	–	–	–	–	–	–	–	–	–	–	–	–	–	–	–
	✓	✓	✓	✓	✓	✓	✓	✓	✓	✓	✓	–	–	✓	✓	✓	✓	✓	✓	✓	✓	✓	✓
	✓	✓	✓	✓	–	–	–	✓	✓	✓	✓	✓	✓	✓	✓	✓	✓	–	–	–	–	–	–
	–	–	–	–	✓	✓	✓	–	–	–	–	–	–	–	–	–	–	–	–	–	–	–	–

Device overview coupling devices

						
		AGH150W-4	AGH204S-4	AGH520S	AGH675S-7/ AGH675S-7MV	AGH676S-4
Catalogue page		363	365	366	367	369
Application		Extension of the nominal voltage range for ISOMETER®s	Extension of the nominal voltage range for ISOMETER®s	Extension of the nominal voltage range for ISOMETER®s	Extension of the nominal voltage range for ISOMETER®s	Extension of the nominal voltage range for ISOMETER®s
Nominal system voltage U_n		AC 0…1150 V, DC 0…1760 V	AC 0…1300 V / AC 0…1650 V	AC/3(N)AC 0…7200 V	AC, 3(N)AC, DC 0…7.2 kV AC, 3(N)AC, DC 0…15.5 kV	AC/3(N)AC 0…12 kV
Device family	IRDH275BM-7	–	–	–	✓	–
	IR420-D64	–	–	–	–	✓
	iso685-D	✓	✓	✓	–	✓
	iso685-S	✓	✓	✓	–	✓
Product details (Products on www.bender.de/en)						

Device overview isolating transformers, transformers for operating theatre lights

				
		ES710	DS0107	ESL0107
Catalogue page		371	376	379
Application		Design of medical IT systems	Supply of three-phase loads in group 0, 1 or 2 medical locations	Supply of operating theatre luminaires
Type of distribution system		single-phase	three-phase	single-phase
Voltages	Input	AC 230 V	3AC 400 V	AC 230 V (±5 %, ±10 %)
	Output	AC 230 V	3NAC 230 V	AC 23…28 V
	Frequency range	50…60 Hz	50…60 Hz	50…60 Hz
Power		3150 VA 4000 VA 5000 VA 6300 VA 8000 VA 10000 VA	2000 VA 3150 VA 4000 VA 5000 VA 6300 VA 8000 VA 10000 VA	120 VA 160 VA 280 VA 400 VA 630 VA 1000 VA
Design type	vertical	✓	✓	✓
	horizontal	✓	✓	–
	encapsulated (protection class B)	✓	✓	–
Product details (Products on www.bender.de/en)				

Device overview power supply units

			
	STEP-PS	**AN410**	**AN450**
Catalogue page	**381**	**384**	**386**
Application	for measuring current transformers	for DC 24 V power supply	for voltage supply
Rated voltage	DC 24 V	DC 24 V	AC 20 V, 50…60 Hz
Rated input voltage U_{IN}	AC 85…264 V, 45…65 Hz DC 95…250 V	AC 90…264 V DC 120…370 V	AC 230 V, 50…60 Hz AC 127 V, 50…60 Hz
Product details (Products on www.bender.de/en)			

Device overview measuring instruments

				
	7204	**7220**	**9604**	**9620**
Catalogue page	**388**	**388**	**388**	**388**
Input current	0…400 µA	0…20 mA	0…400 µA	0…20 mA
Dimensions (mm)	72 x 72	72 x 72	96 x 96	96 x 96
Device family iso685…	–	✓	✓	✓
Product details (Products on www.bender.de/en)				

Device overview interface converters and repeaters

			
		DI-1DL	**DI-2USB**
Catalogue page		**389**	**391**
Application		Interface repeater BMS bus	Interface converter BMS/USB
Input	**Input**	RS-485	RS-485
	Connection	screw-type terminal	screw-type terminal
	Cable length	≤ 1200 m	≤ 1200 m
Output	**Output**	RS-485	USB
	Connection	screw-type terminal	USB Type B
	Cable length	≤ 1200 m	≤ 5 m
	Expansion of bus devices	≤ 30	–
Supply voltage U_S		AC 85…260 V, 50…60 Hz	via USB
Particular features		–	Driver CD
Product details (Products on www.bender.de/en)			

Device overview relay module

	
	IOM441
Catalogue page	**392**
Application	for extension of EDS44x applications
Relay number	12 N/O contacts
Supply voltage U_S	via BB bus
Interface	BB bus
Connection	push-wire terminal / BBbus PCB
Relay operation	configurable
Product details (Products on www.bender.de/en)	

Device overview condition monitors/gateways

						
		COMTRAXX® COM465IP	**COMTRAXX® COM465DP**	**COMTRAXX® COM465ID**	**COMTRAXX® COM463BC**	**COMTRAXX® CP9…-I**
Catalogue page		**394**	**398**	**402**	**406**	**408**
Application		Condition Monitor/Gateway	Condition Monitor/ PROFIBUS-Gateway	Condition Monitor/Gateway	Condition Monitor/Gateway	Condition Monitor/Gateway
Functions	**Protocol input**	BMS / BCOM / Modbus RTU/TCP	BMS / BCOM / Modbus RTU/TCP	isoData / Modbus TCP	BMS (extern) / BCOM	BMS (intern) / BCOM / Modbus RTU/TCP
	Protocol output	Ethernet / Modbus RTU/TCP / SNMP / PROFINET	Ethernet / Modbus RTU/TCP / SNMP / PROFINET / PROFIBUS DP	Ethernet / Modbus TCP / OPC-UA[5]	Ethernet	Ethernet / Modbus RTU/TCP / SNMP / PROFINET
	Display	LED	LED	LED	LED	Display in 7“ oder 15,6“
	Alarm messages	✓ [1, 2]	✓ [1, 2]	✓ [1, 2]	✓ [1, 2]	✓ [1, 2, 3]
	Measured values	✓ [1, 2]	✓ [1, 2]	✓ [1, 2]	✓ [1, 2]	✓ [1, 2, 3]
	Device parameter setting	✓ [1]	✓ [1]	✓ [1]	–	✓ [1]
	Device tests	✓ [1, 2]	✓ [1, 2]	✓ [1, 2]	–	✓ [1, 2]
	Alarm list	✓ [1]	✓ [1]	✓ [1]	–	✓ [1, 3]
	History memory	✓ [1]	✓ [1]	✓ [1]	–	✓ [1]
	Diagrams	✓ [1]	✓ [1]	✓ [1]	–	✓ [1, 3]
	Visualisation	✓ [1]	✓ [1]	✓ [1]	–	✓ [1]
	E-mail notification	✓ [1, 4]	✓ [1, 4]	✓ [1, 4]	✓ [1, 4]	✓ [1, 4]
	Data logger	✓ [1]	✓ [1]	✓ [1]	–	✓ [1]
Connection	**BMS**	screw-type terminal	screw-type terminal	–	screw-type terminal	screw-type terminal
	Modbus RTU	screw-type terminal	screw-type terminal	–	screw-type terminal	screw-type terminal
	isoData	–	–	screw-type terminal	–	–
	Output	RJ 45	RJ 45, Sub-D 9-pole	RJ 45	RJ 45	RJ 45
System requirements	**Supply voltage U_s**	AC/DC 24…240 V	AC/DC 24…240 V	AC/DC 24…240 V	AC/DC 24…240 V	DC 24 V
	Browser	Google Chrome, Microsoft Edge, Mozilla Firefox	Google Chrome, Microsoft Edge, Mozilla Firefox	Google Chrome, Microsoft Edge, Mozilla Firefox	Google Chrome, Microsoft Edge, Mozilla Firefox	Google Chrome, Microsoft Edge, Mozilla Firefox
Product details (Products on www.bender.de/en)						

[1] Functions available on the web server – accessible via a personal computer with browser

[2] Available via the protocol

[3] On the device’s own LC display

[4] TLS/SSL Support

[5] Special OPC-UA profile stored for railway applications

Device overview alarm indicator and test combinations

					
		COMTRAXX® CP9xx	COMTRAXX® CP305	COMTRAXX® MK2430	Visualisation
	Catalogue page	411	414	418	421
Messages/ displays	MEDICS® systems	✓	✓	✓	✓
	RCMS Residual current monitoring system	✓	✓	✓	✓
	EDS insulation fault locator	✓	✓	✓	✓
Installation type	Flush-mounting	✓	✓	✓	✓
	Cavity wall mounting	✓	✓	✓	✓
	Cable-duct mounting	–	✓	✓	–
	Panel mounting	✓	✓	✓	✓
	Surface mounting	✓	✓	✓	–
Inputs/outputs	Digital inputs (potential free)	12	12	0/12	–
	N/O or N/C operation	selectable	selectable	selectable	–
	Relay outputs	1	2	1	–
	N/O or N/C operation	programmable	programmable	programmable	–
	Common alarm	programmable	programmable	programmable	–
	System fault alarm	programmable	programmable	programmable	–
Parameter setting/text message	Languages selectable	> 25	> 25	20	programmable
	Standard display	Graphic LCD (7", 15.6", 24")	5" TFT touch display	4 x 20 characters	–
	Additional text display	✓	✓	3 x 20 characters	–
	Standard texts	✓	✓	✓	–
	Freely configurable text messages	✓	✓	200	–
	History memory, maximum number of data records	2000	1000	250	–
	Real-time clock	✓	✓	✓	–
	Parameterisation software	integrated	integriert	TMK-Set V 4.xx (USB, BMS)	–
	Messages/alarms, medical gases	acc. to EN475, EN737-3	acc. to EN475, EN737-3	acc. to EN475, EN737-8	–
Interfaces	RS-485 (BMS protocol)	✓	✓	✓	–
	BMS address range	1…150	1…90	1…150	–
	Master redundancy, BMS internal	✓	✓	✓	–
	Master redundancy, BMS external	–	–	–	–
	USB	✓	–	✓	–
	Ethernet (TCP/IP)	✓	✓	–	✓
	Supply voltage Us	DC 24 V/AC 250 V	AC 18…28 V/DC 18…30 V	AC/DC 24 V	–
	Stored energy time in the event of power failure	≥ 15 s	≥ 2 s	≤ 15 s	–
	Product details (Products on www.bender.de/en)				

Device overview POWERSCOUT®

		POWERSCOUT®
	Catalogue page	422
Functions	Multi-tenant	Unlimited
	User management	Unlimited
	Logger	Unlimited (all measured values)
	Web front end	✓
	Cloud	✓
	Max. number of devices/data points	Unlimited
	Creation of dashboards	✓
	Event aggregation on the main page	✓
	Configuration of an individual main page	✓
	Reporting	✓
	Export data	csv export
	Import data	csv import
	Virtual measuring point calculation	✓
	Login overview	✓
Widgets	Graph	✓
	Event statistics	✓
	Measurement statistics	✓
	Text editor	✓
	Table view	✓
	Alarm state	✓
	Event protocol	✓
	Gauge	✓
	Heat map	✓
	Sankey diagram	✓
	Bar graph	✓
	Product details (Products on www.bender.de/en)	

W0-S20…W5-S210, W10/600

Measuring current transformers

Measuring current transformer W10/600

Measuring current transformer W0-S20

Measuring current transformer W1-S35

Typical applications

- For residual current monitors (RCM)
- For residual current monitoring systems (RCMS)
- For insulation fault locators with additional EDS in AC and DC systems

Standards

W0-S20…W5-S210 series measuring current transformers comply with the device standard:

- IEC 61869-1.

Approvals

Further information

For further information refer to our product range on www.bender.de.

Ordering information

Type	Inside diameter	Approvals			Art. No.
		UL	EAC	LR	
W10/600	10 mm	–	–	✓	B911761
W0-S20	20 mm	–	✓	✓	B911787
W1-S35	35 mm	✓	✓	✓	B911731
W2-S70	70 mm	✓	✓	✓	B911732
W3-S105	105 mm	✓	✓	✓	B911733
W4-S140	140 mm	✓	✓	✓	B911734
W5-S210	210 mm	✓	✓	✓	B911735

Technical data

Insulation coordination acc. to IEC 60044-1	
Highest system voltage for electrical equipment U_m	AC 720 V
Rated impulse withstand voltage U_{isol}	3 kV

Measuring circuit	
Rated transformation ratio	600/1
Rated burden	180 Ω (18 Ω at 100 A)
Phase displacement	<4°
Rated primary current	≤10 A (100 A)
Rated primary current	≥10 mA
Nominal power	50 mVA
Rated frequency	15…400 Hz
Internal resistance	5…8 Ω
Secondary overvoltage protection	with suppressor diode P6KE6V8CP
Accuracy class	3
Rated continuous thermal current	100 A
Rated short-time thermal current	14 kA 1 s
Rated dynamic current	35 kA 30 ms

Environment	
Shock resistance IEC 60068-2-27 (device in operation)	15 g/11 ms
Bumping IEC 60068-2-29 (transport)	40 g/6 ms
Virbation resistance IEC 60068-2-6 (device in operation)	
W1-S35…W3-S105	1 g/10…150 Hz
W4-S140, W5-S210	1 g/10…150 Hz/0.075 mm
Vibration resistance IEC 60068-2-6 (device not in operation)	2 g/10…150 Hz
Ambient temperature (during operation/during storage)	-10…+ 50 °C/-40…+ 70 °C
Climatic class acc. to DIN IEC 60721-3-3	3K22

Connection	
Connection	screw-type terminals
Connection	
rigid/flexible	0.2…/4/0.2…2.5 mm²
flexible with ferrules with/without plastic sleeve	0.25…2.5 mm²
Conductor sizes	AWG 24-12
Connection to the evaluator	
single wire ≥ 0.75 mm²	0…1 m
single wire, twisted ≥ 0.75 mm²	0…10 m
shielded cable ≥ 0.6 mm²	0…40 m
Shielded cable (shield connected to PE on one side)	recommended cable J-Y(St)Y min. 2 x 0.6

Other	
Operating mode	continuous operation
Mounting	any position
Degree of protection, internal components (DIN EN 60529)	IP40
Degree of protection, terminals (DIN EN 60529)	IP20
Screw mounting	M5
Flammability class	UL94 V-0
Documentation number	D00142 (W(0-5)-S)
	D00143 (W10)

Dimension diagrams

Type W10/600

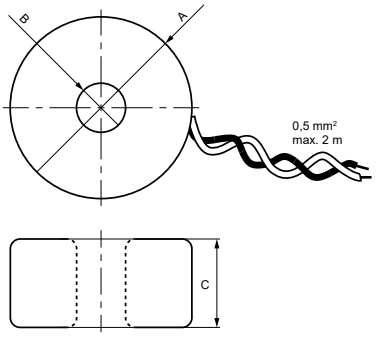

Type W0-S20

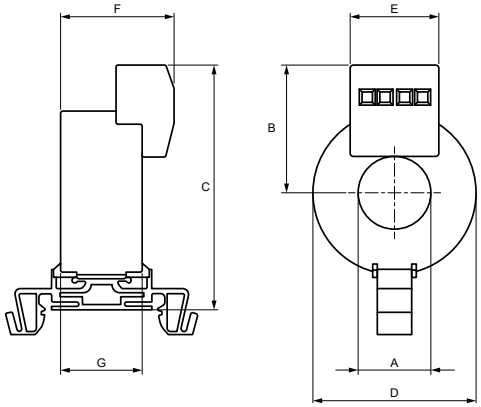

Type W1-S35…W5-S210

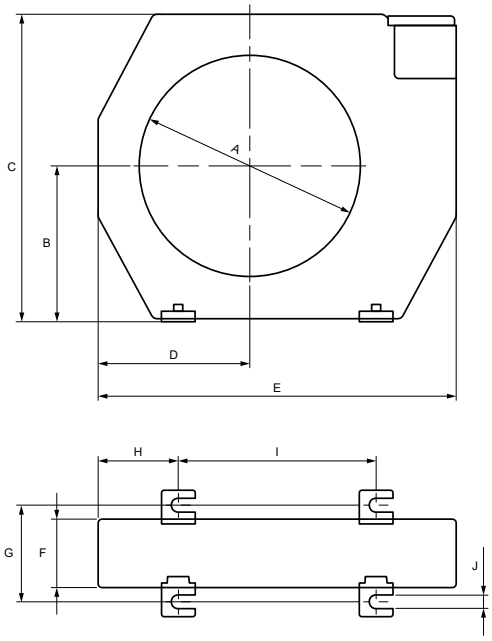

Type	Dimensions (mm)										Weight
	A	B	C	D	E	F	G	H	I	J	
W10/600	ø 37	ø 10	18	–	–	–	–	–	–	–	85 g
W0-S20	ø 20.5	36	69	ø 46	25	32	23	–	–	–	70 g
W1-S35	ø 35	44	79	35	100	32.5	46	26.5	48	6.5	250 g
W2-S70	ø 70	58	110	52	130	32.5	46	32	66	6.5	380 g
W3-S105	ø 150	74	146	72	170	32.5	46	38	94	6.5	700 g
W4-S140	ø 140	99.5	197	97.5	220	32.5	46	48.5	123	6.5	1500 g
W5-S210	ø 210	143	285	150	300	32.5	46	69	161	6.5	2500 g

LINETRAXX® CTAC…

Measuring current transformers

Device features

Measuring current transformers CTAC…

- For RCMS460/490 residual current monitoring systems
- For RCM420 residual current monitors
- For EDS440 insulation fault locators in AC and DC systems

Measuring current transformers CTAC…/01

- For EDS441 insulation fault locators

Typical applications

- For residual current monitoring systems of the series RCM or RCMS
- Suitable for use in insulation fault location for IT systems (EDS)

Further information

For further information refer to our product range on www.bender.de.

Approvals

Ordering information

Type	Mounting	Inside diameter	Art. No.[2]
CTAC20	Mounting brackets, DIN rail	20 mm	B98110005
CTAC20/01[1]			B98110006
CTAC35		35 mm	B98110007
CTAC35/01[1]			B98110008
CTAC60		60 mm	B98110017
CTAC120	Mounting brackets	120 mm	B98110019
CTAC210		210 mm	B98110020

[1] For EDS441 insulation fault locators
[2] B781100xxMIL variants available on request

Accessories

Type designation	Art. No.
Snap-on mounting for CTAC20 and CTAC20/01	B91080111
Snap-on mounting for CTAC35 and CTAC35/01	B91080112

Includet in scope of delivery

Selection list

Type	RCM420	RCMS460 RCMS490	EDS440	EDS441
CTAC20	✓	✓	✓	–
CTAC35	✓	✓	✓	–
CTAC60	✓	✓	✓	–
CTAC120	✓	✓	✓	–
CTAC210	✓	✓	✓	–
CTAC20/01	–	–	–	✓
CTAC35/01	–	–	–	✓

Insulation coordination acc. to IEC 60664-1	
Rated insulation voltage	800 V
Overvoltage category	III
Rated impulse voltage/pollution degree	8 kV/3

Measuring current transformer circuit	
CTAC…	
Rated transformation ratio K_r	600/1
Rated continuous thermal current* I_{cth}	125 A
Frequency range	15 Hz…100 kHz
Rated short-time thermal current* I_{th}	2.4 kA/1 s
Rated dynamic current* I_{dyn}	6.0 kA/40 ms
Rated current I	
CTAC20 at $I_{\Delta n} \geq 30$ mA	63 A
CTAC20 at $I_{\Delta n} \geq 300$ mA	80 A
CTAC35 at $I_{\Delta n} \geq 30$ mA	125 A
CTAC35 at $I_{\Delta n} \geq 300$ mA	160 A
CTAC60 at $I_{\Delta n} \geq 30$ mA	200 A
CTAC60 at $I_{\Delta n} \geq 300$ mA	400 A
CTAC120 at $I_{\Delta n} \geq 100$ mA	400 A
CTAC210 at $I_{\Delta n} \geq 300$ mA	630 A
CTAC…/01	
Rated transformation ratio K_r	8000/1
Rated continuous thermal current* I_{cth}	6 A
Rated short-time thermal current* I_{th}	0.36 kA/1 s
Rated dynamic current* I_{dyn}	0.9 kA/40 ms
Rated current I	
CTAC20/01 at $I_{\Delta n} \geq 30$ mA	63 A
CTAC20/01 at $I_{\Delta n} \geq 300$ mA	80 A
CTAC35/01 at $I_{\Delta n} \geq 30$ mA	125 A
CTAC35/01 at $I_{\Delta n} \geq 300$ mA	160 A

* refers to the residual current

Environment	
Operating temperature	-25…+70 °C
B781100xxMIL (for applications with EDS)	-40…+70 °C
Climatic class acc. to IEC 60721	
Stationary use (IEC 60721-3-3)	3K22
Transport (IEC 60721-3-2)	2K11
Long-time storage (IEC 60721-3-1)	1K22
Classification of mechanical conditions IEC 60721	
Stationary use (IEC 60721-3-3)	3M11
B781100xxMIL devices[1)]	3M12
Transport (IEC 60721-3-2)	2M4
Long-time storage (IEC 60721-3-1)	1M12

Connection	
Terminal type	MSTB 2.5/2-ST-5.08
for B781100xxMIL devices	FKC 2.5/2-ST-5.08
Manufacturer	Phoenix Contact
Connection type	screw type terminal
for B781100xxMIL devices	push-wire terminal
The connection conditions of the manufacturer apply.	
Corresponding PCB connectors are included in the scope of delivery	
Connection properties	
rigid	0.2…2.5 mm² (AWG 24-12)
flexible	0.2…2.5 mm² (AWG 24-12)
Stripping length	7 mm

Connection EDS, RCM(S) measuring current transformers	
Single wire ≥ 0.75 mm²	0…1 m
Single wire, twisted ≥ 0.75 mm²	0…10 m
Shielded cable ≥ 0.5 mm²	0…40 m
Shielded cable	recommended: J-Y(St)Y min. 2x0.8
RCM: shield on one side connected to L-conductor, not connected to earth	
EDS: shield on one side connected to PE	

Mounting	
Screw Type	
CTAC20(/01), CTAC35(/01), CTAC60	DIN EN ISO 7045 - M5x
CTAC120, CTAC210	DIN EN ISO 7045 - M6
Washer type	
CTAC20(/01), CTAC35(/01), CTAC60	DIN EN ISO 7089/7090 - 5
CTAC120, CTAC210	DIN EN ISO 7089/7090 - 6
Tightening torque	
CTAC20(/01), CTAC35(/01)	0.6 Nm
CTAC60, CTAC120, CTAC210	1 Nm

Other	
Degree of protection, internal components (DIN EN 60529)	IP40
Degree of protection, terminals (IEC 60529)	IP20
Flammability class	UL94 V-0
Documentation number	D00386

1) CTAC120 and CTAC210 must be additionally mounted for the 3M12. (see Mountings)

Dimension diagrams

A

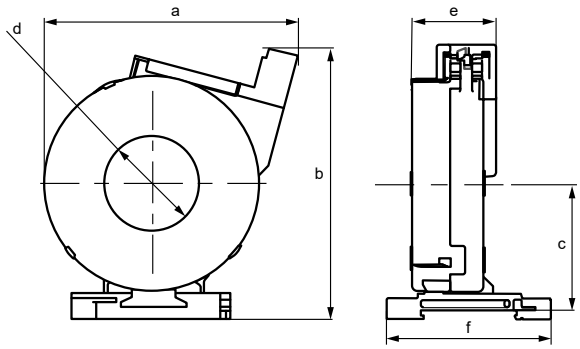

B

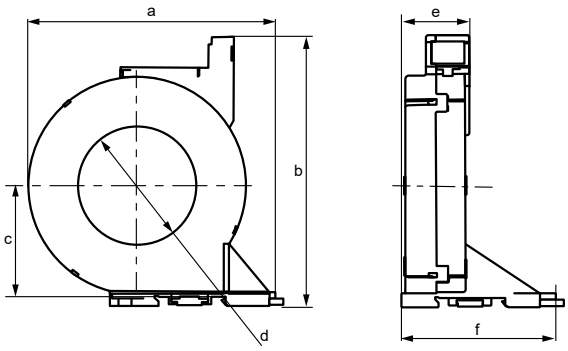

C

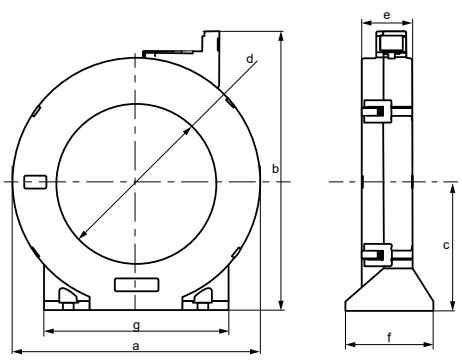

Dimensions (mm)									Weight in g (gross)
	Type	a	b	c	d	e	f	g	
A	CTAC20(/01)	75	82	37	ø 20	32	60	–	160
	CTAC35(/01)	94	100	47	ø 35	30	61	–	220
B	CTAC60	126	137	57	ø 60	33	78	–	460
C	CTAC120	188	211	96	ø 120	38	66	139	1140
	CTAC210	302	324	153	ø 210	40	74	277	2340

Tolerance: ±0,5 mm

Wiring diagram

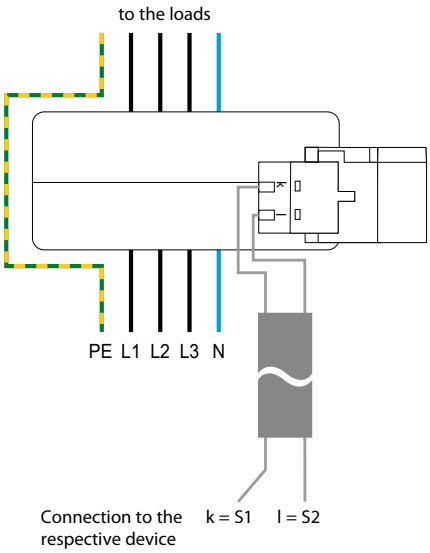

Measuring current transformers CTAC…

Connection to the respective residual current monitoring system RCMS, residual current monitors RCM or to insulation fault location systems EDS

Measuring current transformers CTAC…/01

Connection to the respective EDS474(E)-12, EDS461, EDS491 and EDS441 insulation fault locator

LINETRAXX® CTUB100 series

AC/DC sensitive measuring current transformer (Type B)

Typical applications

- For RCMS460/490 residual current monitoring systems
- For RCM420/423 residual current monitors
- For insulation fault locators of the EDS440 and EDS441-LAB series

Approvals

Device features

- Combined test and reset button
- Multicolour LED for operation, fault and status messages
- Exchangeable electronic module without mechanical separation of the primary conductors
- Extension/retrofitting or modification of functionalities in case of changed monitoring requirements
- Insensitive to load currents due to full magnetic shield (CTUB10x-CTBC20P…210P only)
- Monitoring of the connection to the measuring current transformer
- Supply voltage DC ±12 V/DC 24 V
- CTUB10x-CTBC20…210 for residual current monitoring systems of the RCMS460/490 series as well as for RCMA420/423 residual current monitors
- CTUB10x-CTBC20P…210P for residual current monitoring systems of the RCMS460/490 series as well as for RCMA420/423 residual current monitors. Can be used for very high system-related peak load currents.
- CTUB104-CTBC20…210(P) for insulation fault locators of the EDS440 and EDS441-LAB series.

Standards

CTUB10x series measuring current transformers comply with the following device standard:

- IEC 62020-1 for CTUB101 and CTUB102 in combination with a residual current monitor/residual current monitoring system (RCMS460/490 or RCMA420/423)
- IEC 61557-9 for CTUB104 in combination with an insulation fault locator (EDS440 or EDS441-LAB)

CTUB100 series measuring current transformers comply with the requirements of the standard DIN EN 45545-2 for application in railway vehicles.

Further information

For further information refer to our product range on www.bender.de.

Ordering information

Type	Shielding	Current transformer diameter	Supply voltage	Suitable for evaluator	Art. No.
CTUB101-CTBC20	–	ø 20	DC ±12 V	RCMA420 RCMA423	B78120010
CTUB101-CTBC20P	✓				B78120020
CTUB101-CTBC35	–	ø 35			B78120012
CTUB101-CTBC35P	✓				B78120022
CTUB101-CTBC60	–	ø 60			B78120014
CTUB101-CTBC60P	✓				B78120024
CTUB101-CTBC120	–	ø 120			B78120016
CTUB101-CTBC120P	✓				B78120026
CTUB101-CTBC210	–	ø 210			B78120018
CTUB101-CTBC210P	✓				B78120028
CTUB102-CTBC20	–	ø 20	DC 24 V	RCMS460 RCMS490	B78120011
CTUB102-CTBC20P	✓				B78120021
CTUB102-CTBC35	–	ø 35			B78120013
CTUB102-CTBC35P	✓				B78120023
CTUB102-CTBC60	–	ø 60			B78120015
CTUB102-CTBC60P	✓				B78120025
CTUB102-CTBC120	–	ø 120			B78120017
CTUB102-CTBC120P	✓				B78120027
CTUB102-CTBC210	–	ø 210			B78120019
CTUB102-CTBC210P	✓				B78120029
CTUB104-CTBC20P	✓	ø 20	DC 24 V	EDS440 EDS441-LAB	B78120033
CTUB104-CTBC35P	✓	ø 35			B78120034
CTUB104-CTBC60P	✓	ø 60			B78120035

Ordering details for accessories and spare parts

Electronic modules

Type	Supply voltage U_s	Suitable for evaluator	Art. No.
CTUB101	DC ±12 V	RCMA420/423	B78120050
CTUB102	DC 24 V	RCMS460/490	B78120051
CTUB104	DC 24 V	EDS440/441	B78120053

Required terminals are included in the scope of delivery.
Connecting cables are optionally available.

Connecting cables

Name	Length (m)	Connection to	Art. No.
CTX-100	1	RCMA42…	B98110080
CTX-250	2.5		B98110081
CTX-500	5		B98110082
CTX-1000	10		B98110083
CTXS-100	1	RCMS46… RCMS49… EDS44…	B98110090
CTXS-250	2.5		B98110091
CTXS-500	5		B98110092
CTXS-1000	10		B98110093

Suitable system components

Description	max. connected current transformers	Type	Art. No.	Page
Voltage supply	4	STEP-PS/1 AC/24 DC/0.5	B94053110	**387**
	14	STEP-PS/1 AC/24 DC/1.75	B94053111	**387**
	34	STEP-PS/1 AC/24 DC/4.2	B94053112	**387**

Measuring current transformer cores

Type	Internal diameter	Art. No.
CTBC20	20 mm	B98120001
CTBC20P		B98120002
CTBC35	35 mm	B98120003
CTBC35P		B98120004
CTBC60	60 mm	B98120005
CTBC60P		B98120006
CTBC120	120 mm	B98120007
CTBC120P		B98120020
CTBC210	210 mm	B98120008
CTBC210P		B98120021

P = full magnetic shield

The measuring current transformers of the CTUB10x series comply with the requirements of the standard DIN EN 45545-2.

Accessories

Name	Art. No.
DIN rail mounting clip for CTBC20 and CTBC20P	B91080111
DIN rail mounting clip for CTBC35 and CTBC35P	B91080112

Included in the scope of delivery

Technical data

Insulation coordination acc. to IEC 60664-1/IEC 60664-3

Definitions:	
Measuring circuit (IC1)	primary conductors routed through the current transformer
Secondary (IC2)	connections terminal block
Rated insulation voltage	800 V
Overvoltage category	III
Area of application	≤ 2000 m AMSL
Rated impulse voltage:	
IC1/IC2	8 kV
Rated insulation voltage (reinforced insulation):	
IC1/IC2	800 V
Pollution degree	2

Supply voltage

CTUB101	
Description	+12 V, GND, -12 V
Supply voltage U_s	DC ±12 V
Operating range of U_s	±2 %
Ripple U_s	≤ 1 %
Power consumption	≤ 2.5 W
CTUB102, CTUB104	
Description	24 V, GND
Supply voltage U_s	DC 24 V
Operating range of U_s	±20 %
Ripple U_s	≤ 1 %
Power consumption	≤ 2.5 W
Inrush current	1A for 1 ms

Measuring circuit

Internal diameter measuring current transformer	see dimension diagrams
Rated current I	RCM application / MRCD application
CTBC20 at $I_{\Delta n}$ ≥ 30 mA	63 A / 40 A
CTBC20 at $I_{\Delta n}$ ≥ 300 mA	80 A / 63 A
CTBC20P	80 A / 80 A
CTBC35 at $I_{\Delta n}$ ≥ 30 mA	125 A / 80 A
CTBC35 at $I_{\Delta n}$ ≥ 300 mA	160 A / 125 A
CTBC35P	160 A / 160 A
CTBC60 at $I_{\Delta n}$ ≥ 30 mA	200 A / 160 A
CTBC60 at $I_{\Delta n}$ ≥ 300 mA	400 A / 250 A
CTBC60P	400 A / 320 A
CTBC120 at $I_{\Delta n}$ ≥ 100 mA	400 A / 330 A
CTBC120P at $I_{\Delta n}$ ≥ 100 mA	630 A / 630 A
CTBC210 at $I_{\Delta n}$ ≥ 300 mA	630 A / 630 A
CTBC210P at $I_{\Delta n}$ ≥ 100 mA	630 A / 630 A
CTBC210P at $I_{\Delta n}$ ≥ 300 mA	1000 A / 1000 A
Measurement accuracy	±1 % of full scale value
Test winding	yes
Rated continuous thermal current [1] I_{cth}	125 A
at UL applications	30 A
Rated short-time thermal current [1] I_{th}	2.4 kA/1 s
Rated dynamic current [1] I_{dyn}	6 kA/40 ms

[1] refers to the residual current

Possible response values (to be set on the evaluator)

CTBC20, CTBC20P	10…500 mA
CTBC35, CTBC35P, CTUBC60, CTBC60P	30 mA…10 A
CTBC120, CTBC120P, CTBC210P	100 mA…10 A
CTBC210	300 mA…10 A

Measuring ranges (CTUB101, CTUB102)

Measuring range 1 ($I_{\Delta n}$ ≤ 0.1 A)	0…900 mA (peak)
Measuring range 2 (0.1 A < $I_{\Delta n}$ ≤ 0.5 A)	0…3.5 A (peak)
Measuring range 3 ($I_{\Delta n}$ > 0.5 A)	0…20 A (peak)

Measuring range (CTUB104)

Measuring range	DC 0…70 mA

Technical data (continued)

Indication

Multicolour LED	table on page 348

Output

Name	S1 (k), S2 (l)
Scaling	400 mV/1 A
Max. voltage	±10 V
Max. connector length	10 m
Output resistance	172 Ω

Input

Name	T (for CTUB101 only)
Current load	< 300 mA

Environment/EMC

EMC (CTUB101, CTUB102)	IEC 62020-1
EMC (CTUB104)	IEC 61326-2-4
Operating temperature	-25…70 °C

Classification of climatic conditions acc. to IEC 60721 (except condensation and formation of ice)

Stationary use (IEC 60721-3-3)	3K24
Transport (IEC 60721-3-2)	2K11
Long-term storage (IEC 60721-3-1)	1K22

Classification of mechanical conditions acc. to IEC 60721

Stationary use (IEC 60721-3-3)	3M11
Transport (IEC 60721-3-2)	2M4
Long-term storage (IEC 60721-3-1)	1M12

Connection

Max. connection length	10 m

Connecting cables are optionally available.
Use 60/75 °C copper lines only.

Terminal block

Manufacturer	Phoenix Contact
Type	DFMC 1.5/4-ST-3.5 BK

The connection conditions of the manufacturer apply.

Connection properties	
rigid	0.2…1.5 mm² (AWG 24-16)
flexible	0.2…1.5 mm²
with ferrule	0.25…0.75 mm²

Mounting CTBC…

Screw type	
CTBC20…60(P)	DIN EN ISO 7045 - M5x
CTBC120…210(P)	DIN EN ISO 7045 - M6
Washer type	
CTBC20…60(P)	DIN EN ISO 7089/7090 - 5
CTBC120…210(P)	DIN EN ISO 7089/7090 - 6
Tightening torque	
CTBC20…35 (P)	0.6 Nm
CTBC60…210(P)	1 Nm

Other

Operating mode	continuous operation
Mounting	any position
Degree of protection, internal components (DIN EN 60529)	IP40
Degree of protection, terminals (DIN EN 60529)	IP20
Flammability class	UL94 V-0
Software	D591
Documentation number	D00362
Weight	
CTUB10x- CTBC20	≤ 230 g
CTUB10x- CTBC20P	≤ 290 g
CTUB10x- CTBC35	≤ 310 g
CTUB10x- CTBC35P	≤ 390 g
CTUB10x- CTBC60	≤ 530 g
CTUB10x- CTBC60P	≤ 690 g
CTUB10x- CTBC120	≤ 1460 g
CTUB10x- CTBC120P	≤ 1820 g
CTUB10x- CTBC210	≤ 4290 g
CTUB10x- CTBC210P	≤ 4940 g

The use of the power supply units listed at "Accessories" is recommended.
The use of a surge protection device is mandatory (not required for CTUB104).

Dimension diagrams

A

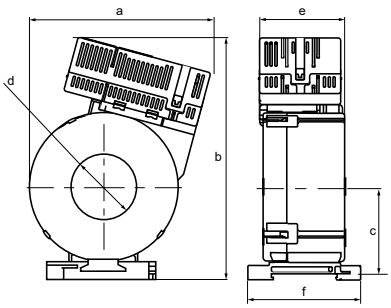

B

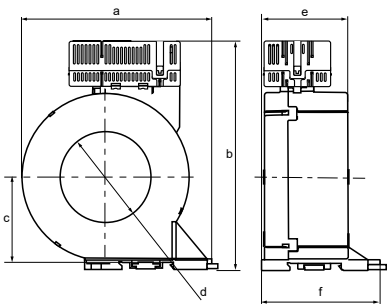

C

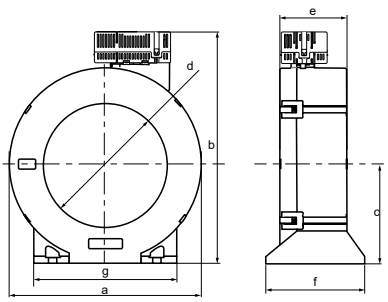

D

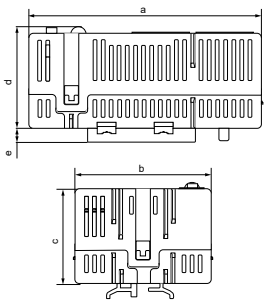

Dimensions (mm)								
	Type	**a**	**b**	**c**	**d**	**e**	**f**	**g**
A	CTUB10…-CTBC20(P)	75	83	37	ø 20	46	60.5	–
	CTUB10…-CTBC35(P)	97	130	47	ø 35	46	61	–
B	CTUB10…-CTBC60(P)	126	151	57	ø 60	56	78	–
C	CTUB10…-CTBC120(P)	188	225	96	ø 120	65	96	139
	CTUB10…-CTBC210(P)	302	339	153	ø 210	67	113	277
D	CTUB10…	74	44	30	32	4.6	–	–

Tolerance: ±0.5 mm

System states: LED

The LED indicates the system state by means of colours and lighting/flashing.

System state	LED		Notes
	green (ON)	red (alarm)	
Device switched off	off	off	Device is deenergised
Normal operating state	lights	off	The device is supplied with the specified voltage and the measuring current transformer core is connected to the electronic module.
Device error	off	flashes	The device is supplied with the specified voltage but there is no connection to the measuring current transformer core or some other device error has occurred.

Wiring diagram

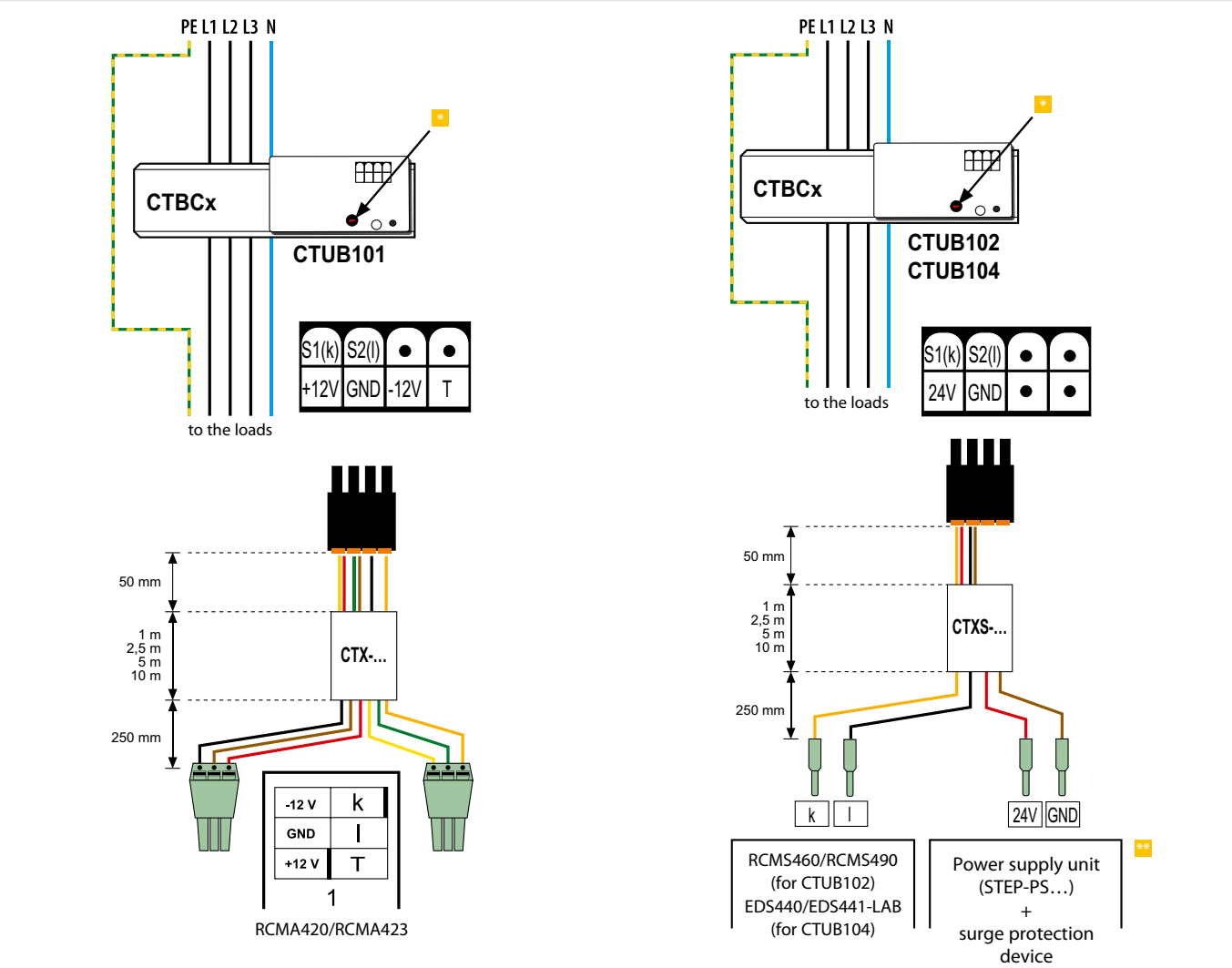

* The measuring range must be selected according to the response value $I_{\Delta N}$ set on the RCMS460 or RCMA420/423 evaluator. If, however, a larger measuring range is selected, the resolution deteriorates. For the CTUB104, a selection of the measuring range is not required.

Setting measuring range (not required for CTUB104)				
#	Potentiometer setting	Response value RCMA/RCMS	Measuring range rms	Measuring range peak
1		$I_{\Delta n} \leq 0.1$ A	0…450 mA	0…900 mA
2		$0.1 \text{ A} < I_{\Delta n} \leq 0.5$ A	0…0.75 A	0…3.5 A
3		$I_{\Delta n} > 0.5$ A	0…10 A	0…20 A

** – The use of a type 2 surge protection device (SPD) is mandatory due to possible impulse voltages and in order to comply with normative requirements (not required for CTUB104).
– The surge protection device must be connected upstream of the power supply unit on the supply side.
– The surge protection device 7P.22.8.275.1020 from Finder or an equivalent alternative can be used.

Caution!
When using several CTUB100 measuring current transformers, the power supply (24V, GND) must not be daisy-chained from current transformer to current transformer but should be star-shaped (e.g. using a potential distributor).

WR70x175S(P)…WR200x500S(P) series

Measuring current transformers

Measuring current transformers WR70x175S(P)

Measuring current transformers WR200x500S(P)

Approvals

Typical applications

- For RCMS460/490 residual current monitoring systems
- For RCM420 residual current monitors
- For EDS470, EDS460/490 and EDS440 insulation fault locators in AC and DC systems
- The WR…SP measuring current transformers are particularly suitable for use in busbar systems. This series is to be used for load currents ≥ 500 A.

Standards

WR70x175S(P)…WR200x500S(P) measuring current transformers comply with the device standards:

- DIN EN 60044-1
- IEC 61869

Further information

For further information refer to our product range on www.bender.de.

Ordering information

Type	Internal dimensions	Approvals		Screening	Art. No.
		UL	LR		
WR70x175S	70 x 175 mm	✓	✓	without screening	B911738
WR115x305S	115 x 305 mm	✓	✓		B911739
WR150x350S	150 x 350 mm	✓	✓		B911740
WR200x500S	200 x 500 mm	–	✓		B911763
WR70x175SP	70 x 175 mm	–	✓	Screening integrated	B911790
WR115x305SP	115 x 305 mm	–	✓		B911791
WR150x350SP	150 x 350 mm	–	✓		B911792
WR200x500SP	200 x 500 mm	–	✓		B911793

Technical data

Insulation coordination acc. to IEC 61869-2	
Highest system voltage for electrical equipment U_m	AC 720 V
Rated impulse withstand voltage U_{isol}	3 kV

Measuring circuit	
Rated transformation ratio	600/1
Rated burden	180 Ω
Rated primary current	≤ 10 A (100 A)
Rated primary current	≥ 10 mA
Nominal power	50 mVA
Rated frequency	50…400 Hz
Internal resistance	5…8 Ω
Secondary overvoltage protection	suppressor diode P6KE6V8CP
Accuracy class	5
Rated continuous thermal current	100 A
Rated short-time thermal current	14 kA/1 s
Rated dynamic current	35 kA/30 ms

Environment	
Shock resistance IEC 60068-2-27 (device in operation)	15 g/11 ms
Bumping IEC 60068-2-29 (transport)	40 g/6 s
Vibration resistance IEC 60068-2-6 (device in operation)	1 g/10…150 Hz
Vibration resistance IEC 60068-2-6 (transport)	2 g/10…150 Hz
Ambient temperature (during operation)	-10…+50 °C
Ambient temperature (during storage)	-40…+70 °C
Climatic class acc. to DIN IEC 60721-3-3	3K22

Connection	
Connection	screw-type terminals
Connection	
rigid/flexible	0.2…4/0.2…2.5 mm²
flexible with ferrules with/without plastic sleeve	0.25…2.5 mm²
Conductor sizes	AWG 24-12
Connection to the evaluator	
single wire ≥ 0.75 mm²	0…1 m
single wire, twisted ≥ 0.75 mm²	0…10 m
shielded cable ≥ 0.6 mm²	0…40 m
Shielded cable (shield on one side connected to PE)	recommended: J-Y(St)Y min. 2 x 0.6

Other	
Operating mode	continuous operation
Mounting	any position
Degree of protection, internal components (DIN EN 60529)	IP40
Degree of protection, terminals (DIN EN 60529)	IP20
Screw mounting	M5
Flammability class	UL94 V-0
Documentation number	D00144

Dimension diagrams

WR70x175S(P)…WR150x350S(P)

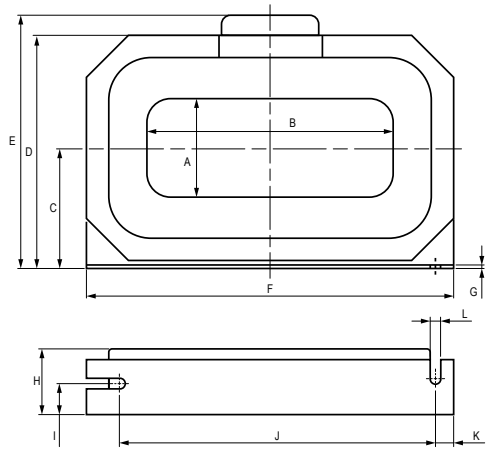

WR200x500S(P)

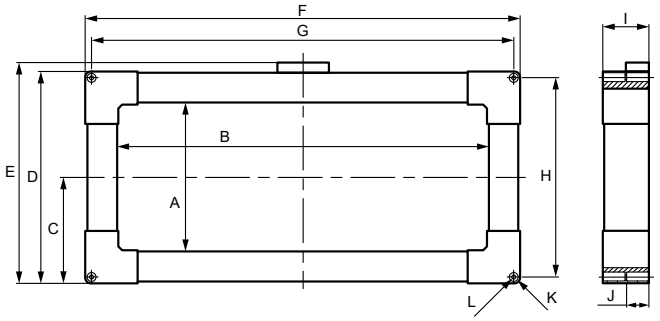

Dimensions (mm)													Weight
Type	A	B	C	D	E	F	G	H	I	J	K	L	
WR70x175S(P)	70	175	85	165	180	261	2.5	46	22	225	13	7,5	2900 g
WR115x305S(P)	115	305	402	225	240	402	2.5	55	25	360	18.5	8	6300 g
WR150x350S(P)	150	350	460	272	286	460	2.5	55	28	418	23	8	8250 g
WR200x500S(P)	200	500	142.5	285	297	585	567.9	267.9	62	30	ø12	ø5.5	9000 g

Wiring diagram

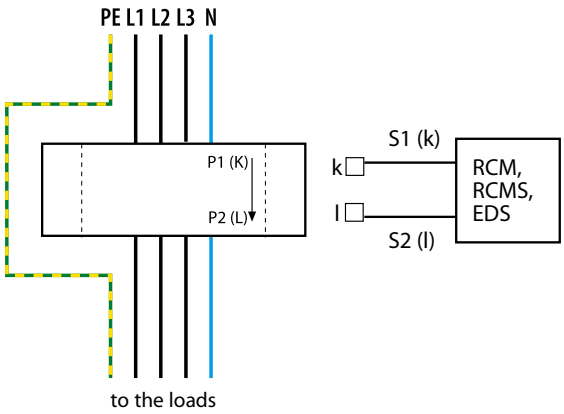

LINETRAXX® CTAS series

Split-core type measuring current transformers

Typical applications

CTAS… measuring current transformers

- For residual current monitoring systems of the RCMS460/490 series
- For residual current monitors of the RCM420 series
- For insulation fault locators of the EDS440 series in AC and DC systems

CTAS…/01 measuring current transformers

- For insulation fault locators EDS441

Approvals

Further information

For further information refer to our product range on www.bender.de.

Ordering information

Type	Internal diameter	Mounting	Art. No.
CTAS50	50 mm	Screw mounting, DIN rail	B98110009
CTAS50/01			B98110012
CTAS80	80 mm		B98110010
CTAS80/01			B98110013
CTAS120	120 mm	Screw mounting	B98110011
CTAS120/01			B98110014

Accessories

Description	Art. No.
Mounting clip [1]	B98110015
Mounting bracket	B98110016

[1] Included in the scope of delivery of the CTAS50(/01) and CTAS80(/01).
For CTAS120(/01) reduced mechanical conditions apply.

Selection list

Type	RCM420	RCMS460 RCMS490	EDS440	EDS441
CTAS50	✓	✓	✓	–
CTAS80	✓	✓	✓	–
CTAS120	✓	✓	✓	–
CTAS50/01	–	–	–	✓
CTAS80/01	–	–	–	✓
CTAS120/01	–	–	–	✓

Technical data

Insulation coordination according to IEC 60664-1

Rated voltage	
CTAS50(/01)	500 V
CTAS80(/01)/CTAS120(/01)	630 V
Overvoltage category	III
Rated impulse voltage/pollution degree	8 kV/3

Insulation coordination according to IEC 61869-1

Rated voltage	720 V

Measuring current transformer circuit

CTAS…

Rated transformation ratio K_r	600/1
Rated continuous thermal current* I_{cth}	125 A
Frequency range	42 Hz…3 kHz
Rated short-time thermal current* I_{th}	2.4 kA/1 s
Rated dynamic current* I_{dyn}	6.0 kA/40 ms
Rated current I_n	
CTAS50 at $I_{\Delta n} \geq 30$ mA	85 A
CTAS80 at $I_{\Delta n} \geq 100$ mA	160 A
CTAS120 at $I_{\Delta n} \geq 300$ mA	250 A

CTAS…/01

Rated transformation ratio K_r	8000/1
Rated continuous thermal current* I_{cth}	125 A
Rated short-time thermal current* I_{th}	0.36 kA/1 s
Rated dynamic current* I_{dyn}	0.9 kA/40 ms
Rated current I_n	
CTAS50/01 at $I_{\Delta n} \geq 30$ mA	85 A
CTAS80/01 at $I_{\Delta n} \geq 100$ mA	160 A
CTAS120/01 at $I_{\Delta n} \geq 300$ mA	250 A

* refers to the residual current

For UL applications:

Sensing voltage	630 V
Working voltage	30 V
Sensing current difference	
CTAS50(/01)	30 mA
CTAS80(/01)	100 mA
CTAS120(/01)	300 mA

Technical data (continued))

Environment	
Operating temperature	-25…+70 °C

Classification of climatic conditions acc. to IEC 60721	
Stationary use (IEC 60721-3-3)	3K23
Transport (IEC 60721-3-2)	2K11
Long-term storage (IEC 60721-3-1)	1K22 (-40…+80 °C)

Classification of mechanical conditions acc. to IEC 60721	
Stationary use (IEC 60721-3-3)	
Mounting clip	3M12
Mounting bracket	3M12
Transport (IEC 60721-3-2)	2M4
Long-term storage (IEC 60721-3-1)	1M12

Connection	
Connection type	screw-type terminals
Connection properties	
rigid	0.34…2.5 mm² (AWG 22-12)
flexible	0.34…2.5 mm² (AWG 22-12)
Stripping length	8…9 mm
Tightening torque	0.5 Nm (4.43lb-in)
For UL applications	
conductors	copper or copper-clad aluminium

Connection EDS, RCM(S) measuring current transformers	
Single wire ≥ 0.75 mm²	0…1 m
Single wire, twisted ≥ 0.75 mm²	0…10 m
Shielded cable ≥ 0.5 mm²	0…40 m
Shielded cable	
recommended	CAT6/CAT7 min. AWG 22
alternatively	Cables, twisted pairs, J-Y(St)Y min. 2x0,8
RCM	shield connected to L conductor, must not be earthed
EDS	shield to PE

Other	
Degree of protection	
internal components (DIN EN 60529)	IP40
terminals (DIN EN 60529)	IP20
Flammability class	UL94 V-0
Number of opening cycles	max. 10
Documentation number	D00452

Dimension diagram

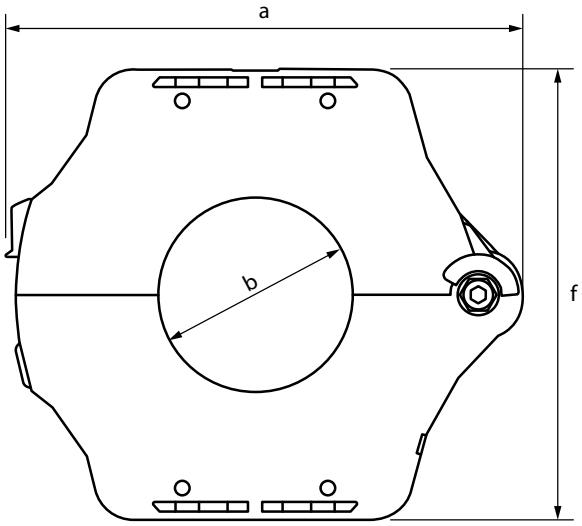

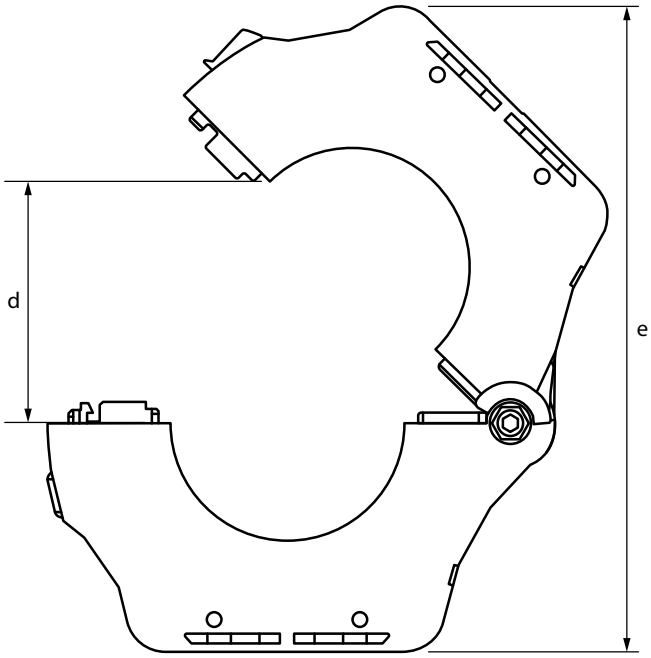

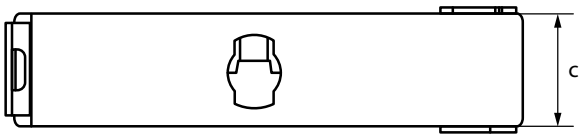

Dimensions (mm)							Weight in g (gross)
Type	a	b	c	d	e	f	
CTAS50	133	ø 50	29	77	175	116	425
CTAS50/01	133	ø 50	29	77	175	116	460
CTAS80	177	ø 80	29	108	235	156	875
CTAS80/01	177	ø 80	29	108	235	156	950
CTAS120	225	ø 120	50	150	303	205	1500
CTAS120/01	225	ø 120	50	150	303	205	1550

Tolerance: ±0.5 mm

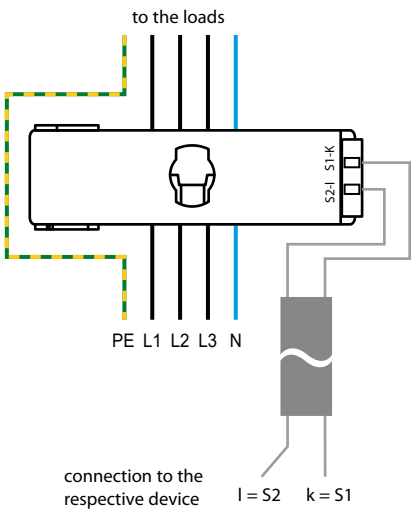

CTAS… measuring current transformers

Connection to residual current monitoring systems of the RCMS series, residual current monitors of the RCM series or insulation fault location systems of the EDS series

CTAS…/01 measuring current transformers

Connection to an insulation fault locator EDS441

LINETRAXX® CTBS25

Split-core AC/DC sensitive measuring current transformer

Typical applications

- For residual current monitoring systems (RCMS)
- For insulation fault locators (EDS)

Approvals

Device features

- Split-core measuring current transformer for easy retrofitting without disconnecting the primary conductors
- Suitable for AC/DC sensitive type B residual current measurement
- Can be combined with RCMS460/490 residual current monitoring systems
- Can be combined with EDS440 insulation fault locators
- Supply voltage DC 24 V

Standards

The CTBS25 measuring current transformer complies with the device standard:

- IEC 62020:2003-11 in combination with a residual current monitor/monitoring system (RCMS460/490 or RCMA420/423)
- IEC 61557-9 in combination with an insulation fault locator (EDS440)

Further information

For further information refer to our product range on www.bender.de.

Ordering information

Type	Supply voltage U_s	Art. No.
CTBS25	DC 24 V	B98120060

Technical data

Values only apply to closed measuring current transformer.

Insulation coordination acc. to IEC 60664-1/IEC 60664-3

Definitions	
Measuring circuit (IC1)	Primary conductors routed through the current transformer
Secondary (IC2)	Terminal block 1 (24 V, GND, S1, S2)
Rated voltage	300 V
Overvoltage category	III
Operating altitude	≤ 2000 m AMSL
Rated impulse voltage IC1/IC2	4 kV
Rated insulation voltage IC1/IC2	300 V
Pollution degree	2
Basic insulation between IC1/IC2	300 V

Supply voltage

Supply voltage U_s	DC 24 V
Operating range of U_s	±5 %
Ripple U_s	≤ 2 %
Inrush current	10 A for 25 µs
Power consumption	≤ 0.25 W typ. (2.5 W max.)

Measuring circuit

Measuring current transformer, internal diameter	25 mm
Characteristics according to IEC 62020 and IEC/TR 60755	AC/DC sensitive, type B
Frequency bandwidth	DC . . . 100 kHz
Measuring range $I_{\Delta n}$	
DC/AC (< 100 kHz)	10. . .500 mA
Rated current I_n	100 A
Rated continuous thermal current I_{cth}	68 A
Operating uncertainty	±1 % ± 1 mA
Cable length between (S1, S2) and (k, l)	10 m

Displays

Multicolour LED	red, green

Environment/EMC

EMC	IEC 62020:1998+A1:2003
Operating temperature	-25. . .75 °C

Classification of climatic conditions acc. to IEC 60721

(except condensation and formation of ice)

Stationary use (IEC 60721-3-3)	3K23
Transport (IEC 60721-3-2)	2K11
Long-term storage (IEC 60721-3-1)	1K22

Classification of mechanical conditions acc. to IEC 60721

Stationary use (IEC 60721-3-3)	3M11
Transport (IEC 60721-3-2)	2M4
Long-term storage (IEC 60721-3-1)	1M12

Terminal block 1, reverse polarity protection

Required terminals are included in the scope of delivery.
The connection conditions of the manufacturer apply.

Manufacturer	Phoenix Contact
Type	PCB plug-in connector - DFMC 0.5/ 5-ST-2.54
Connection properties	
rigid	0.14. . .0.5 mm² (AWG 26-20)
flexible	0.14. . .0.5 mm² (AWG 26-20)
with ferrule	0.25. . .0.34 mm² (AWG 24-22)

Other

Operating mode	continuous operation
Mounting	any position
Degree of protection (DIN EN 60529)	IP30
Flammability class	UL94 V-0
Documentation number	D00388
Weight	≤ 165 g

Dimension diagrams (dimensions in mm)

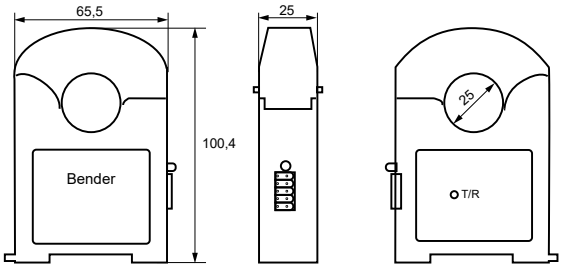

Wiring diagram

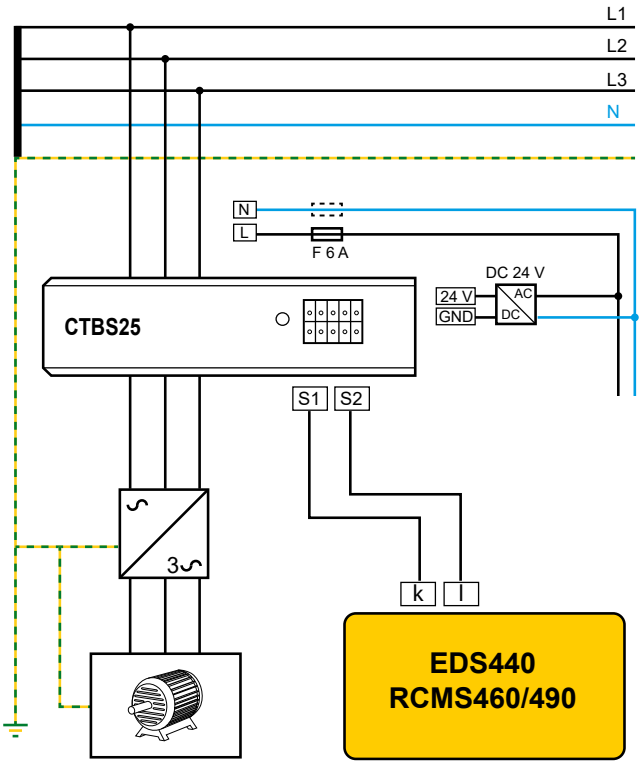

WS…/WS…-8000 series

Split-core type measuring current transformers

Typical applications

WS… measuring current transformers

- For RCMS460/490 residual current monitoring systems
- For RCM420/RCM460 residual current monitors
- For EDS470, EDS460/490 and EDS440 insulation fault locators in AC and DC systems

WS…-8000 measuring current transformer

- For EDS473(E)-12, EDS474(E)-12, EDS461 and EDS491 insulation fault locators

Approvals

Standards

WS… and WS…-8000 measuring current transformers comply with the device standard:

- IEC 61869-1

Further information

For further information refer to our product range on www.bender.de.

Ordering information

Type	Internal dimensions	Mounting	Art. No.
WS20x30	20 x 30 mm	Mounting brackets	B98080601
WS20x30-8000[1)]			B98080602
WS50x80	50 x 80 mm		B98080603
WS50x80-8000[1)]			B98080604
WS80x120	80 x 120 mm		B98080606

[1)] For EDS461/491 and EDS473/474 insulation fault locators

Selection list

Type	RCM420	RCMS460 RCMS490	EDS440	EDS441	EDS441-LAB
WS20x30	✓	✓	✓	–	–
WS50x80	✓	✓	✓	–	–
WS80x120	✓	✓	✓	–	–
WS20x30-8000	–	–	–	✓	✓
WS50x80-8000	–	–	–	✓	✓

Technical data

Insulation coordination acc. to IEC 60664-1/IEC 60664-3	
Rated insulation voltage	800 V
Rated impulse voltage/pollution degree	8 kV/3

CT circuit WS…	
Rated primary residual current	10 A
Rated secondary residual current	0.0167 A
Rated transformation ratio K_n	10/0.0167 A
Rated burden	max. 180 Ω
Nominal power	0.05 VA
Frequency range	42 Hz…3 kHz
Rated continuous thermal current I_{cth}	40 A
Rated short-time thermal current I_{th}	60 x I_{cth} = 2.4 kA/1 s
Rated dynamic current I_{dyn}	2.5 x I_{th} = 6.0 kA/40 ms

CT circuit WS…-8000	
Rated primary residual current	1 A
Rated secondary residual current	0.125 mA
Rated transformation ratio K_n	1 A/0.125 mA
Frequency range	42 Hz…3 kHz
Rated continuous thermal current I_{cth}	6 A
Rated short-time thermal current I_{th}	60 x I_{cth} = 0.36 kA/1 s
Rated dynamic current I_{dyn}	2.5 x I_{th} = 0.9 kA/40 ms

Environmental conditions	
Operating temperature	-25…+70 °C
Classification of climatic conditions acc. to IEC 60721 (except condensation and formation of ice)	
Stationary use (IEC 60721-3-3)	3K22
Transport (IEC 60721-3-2)	2K12
Long-time storage (IEC 60721-3-1)	1K22
Classification of mechanical conditions IEC 60721	
Stationary use (IEC 60721-3-3)	3M11
Transport (IEC 60721-3-2)	2M4
Long-time storage (IEC 60721-3-1)	1M12

Connection	
Connection	screw-type terminals
Connection rigid/flexible/conductor sizes	0.08…2.5 mm² (AWG 28-12)
Stripping length	8…9 mm
Connection EDS, RCM(S) measuring current transformers	
Single wire ≥ 0.75 mm²	0…1 m
Single wire, twisted ≥ 0.75 mm²	0…10 m
Shielded cable ≥ 0.5 mm²	0…40 m
Shielded cable (shield on one side connected to L-conductor, not connected to earth)	recommended: J-Y(St)Y min. 2x0.8

Other	
Degree of protection, internal components (DIN EN 60529)	IP40
Degree of protection, terminals (DIN EN 60529)	IP20
Screw mounting	M5 with mounting brackets
Documentation number	D00077

Dimension diagram

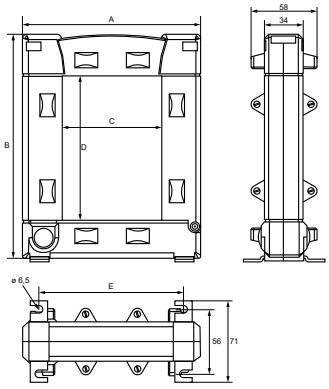

Dimensions (mm)						Weight
Type	A	B	C	D	E	
WS20x30	93	106.15	23	33	64	≤ 600 g
WS50x80	125	158.15	55	85	96	≤ 1040 g
WS80x120	155	198.15	85	125	126	≤ 1400 g
WS20x30-8000	93	106.15	33	33	64	≤ 630 g
WS50x80-8000	125	158.15	85	85	96	≤ 1080 g

Wiring diagram

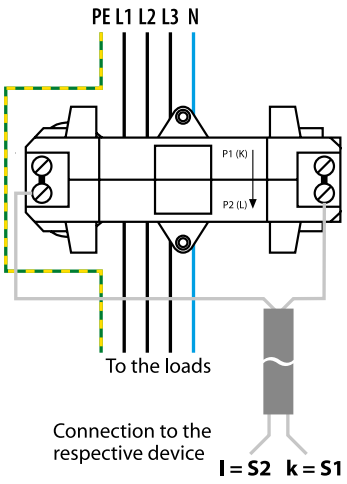

WS… series measuring current transformers

Connection to the respective RCMS series residual current monitoring system, RCM series residual current monitors or to EDS series insulation fault location systems

WS…-8000 measuring current transformer

Connection to the respective EDS461 and EDS491 insulation fault locator

WS50x80S…WS80x160S series

Split-core type measuring current transformers

Measuring current transformer WS50x80S

Measuring current transformer WS80x160S

Typical applications

- For residual current monitors (RCM)
- For residual current monitoring systems (RCMS)
- For insulation fault locators with additional EDS in AC and DC systems

Standards

WS… measuring current transformers comply with the device standard:

- IEC 61869-1.

Approvals

Further information

For further information refer to our product range on www.bender.de.

Ordering information

Type	Internal dimensions	Approvals			Art. No.
		UL	EAC	LR	
WS50x80S	50 x 80 mm	✓	✓	✓	B911741
WS80x80S	80 x 80 mm	✓	✓	✓	B911742
WS80x120S	80 x 120 mm	✓	✓	✓	B911743
WS80x160S	80 x 160 mm	–	✓	✓	B911755

Technical data

Insulation coordination acc. to IEC 60044-1

Highest system voltage for electrical equipment U_m	AC 720 V
Rated impulse withstand voltage U_{isol}	3 kV

Measuring circuit

Rated transformation ratio	600/1
Rated burden	180 Ω
Rated primary current	≤ 10 A (100 A)
Rated primary current	≥ 10 mA
Nominal power	50 mVA
Rated frequency	50…400 Hz
Internal resistance	5…8 Ω
Secondary overvoltage protection	with suppressor diode P6KE6V8CP
Accuracy class	5
Rated continuous thermal current	100 A
Rated short-time thermal current	14 kA/1 s
Rated dynamic current	35 kA/30 ms

Environment

Standard	IEC 60044-1
Shock resistance IEC 60068-2-27 (device in operation)	15 g/11 ms
Bumping IEC 60068-2-29 (transport)	40 g/6 s
Vibration resistance IEC 60068-2-6 (device in operation)	1 g/10…150 Hz
Vibration resistance IEC 60068-2-6 (transport)	2 g/10…150 Hz
Ambient temperature (during operation)	-10…+50 °C
Storage temperature range	-40…+70 °C
Climatic class acc. to DIN IEC 60721-3-3	3K22

Connection

Connection	screw-type terminals
Connection	
rigid/flexible	0.2…4/0.2…2.5 mm²
flexible with ferrules with/without plastic sleeve	0.25…2.5 mm²
Conductor sizes	AWG 24-12
Connection to the evaluator	
single wire ≥ 0.75 mm²	0…1 m
single wire, twisted ≥ 0.75 mm²	0…10 m
shielded cable ≥ 0.6 mm²	0…40 m
Shielded cable (shield on one side connected to PE)	recommended: J-Y(St)Y min. 2 x 0.6

Other

Operating mode	continuous operation
Mounting	any position
Degree of protection, internal components (DIN EN 60529)	IP40
Degree of protection, terminals (DIN EN 60529)	IP20
Screw mounting	M5
Flammability class	UL94 V-0
Documentation number	D00145

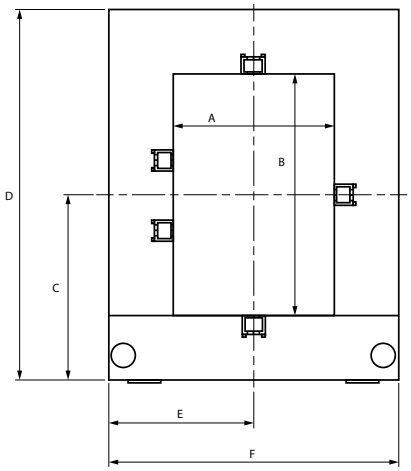

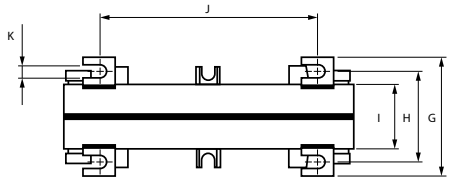

Dimensions (mm)												Weight
Type	**A**	**B**	**C**	**D**	**E**	**F**	**G**	**H**	**I**	**J**	**K**	
WS50x80S	50	80	72	145	57	114	59	45	32	78	6.5	900 g
WS80x80S	80	80	72	145	72	144	59	45	32	108	6.5	1050 g
WS80x120S	80	120	92	184	72	144	59	45	32	108	6.5	1250 g
WS80x160S	80	160	113	225	92	184	59	45	32	120	6.5	2550 g

LINETRAXX® Series WF…

Consisting of an RCC420 signal converter and a W…F measuring current transformer
Flexible WF170, WF250, WF500, WF800, WF1200, WF1800 measuring current transformers

Typical applications

- Residual, fault and nominal current monitoring of loads and systems which cannot be switched off
- EMC monitoring of TN-S systems for "stray currents" and additional N-PE connections in the central earthing point (CEP)
- Monitoring of PE and equipotential bonding conductors to ensure they are free of current

Approvals

Device features

- Flexible measuring current transformer in different lengths
- Space-saving design, quick installation
- Easy retrofitting into existing installations
- Can be installed without the need to disconnect the conductors
- Connection monitoring WF… measuring current transformers
- For RCMS460/490 series residual current monitoring systems
- For RCM420 series residual current monitors
- Analogue output (U, I) for external measuring devices
- RCC420 with push-wire terminals (two terminals per connection)

Further information

For further information refer to our product range on www.bender.de.

Ordering information

Type	Supply voltage U_s[1]	Length A measuring current transformer	Art. No.
WF170-1	AC 16…72 V, 42…460 Hz / DC 9.6…94 V	170 mm	B78080201
WF170-2	AC 70…300 V, 42…460 Hz / DC 70…300 V		B78080202
WF250-1	AC 16…72 V, 42…460 Hz / DC 9.6…94 V	250 mm	B78080203
WF250-2	AC 70…300 V, 42…460 Hz / DC 70…300 V		B78080204
WF500-1	AC 16…72 V, 42…460 Hz / DC 9.6…94 V	500 mm	B78080205
WF500-2	AC 70…300 V, 42…460 Hz / DC 70…300 V		B78080206
WF800-1	AC 16…72 V, 42…460 Hz / DC 9.6…94 V	800 mm	B78080207
WF800-2	AC 70…300 V, 42…460 Hz / DC 70…300 V		B78080208
WF1200-1	AC 16…72 V, 42…460 Hz / DC 9.6…94 V	1200 mm	B78080209
WF1200-2	AC 42…460 Hz, 70…300 V / DC 70…300 V		B78080210
WF1800-1	AC 16…72 V, 42…460 Hz / DC 9.6…94 V	1800 mm	B78080221
WF1800-2	AC 42…460 Hz, 70…300 V / DC 70…300 V		B78080222

[1] Absolute values

Accessories

Description	Type	Art. No.
Mounting clip for screw mounting (1 piece per device)	XM420 (RCC420)	B98060008

Technical data

Electrical safety	
Standard: RCC420	IEC 61010-2-030: 2004-05-01
Pollution degree	3
Rated insulation voltage	250 V
Standard: WF…	IEC 61010-1 and IEC 61010-2-032 CAT III
Pollution degree	2
Rated insulation voltage (CAT III)	1000 V_{rms} or DC

Supply voltage	
Supply voltage U_s	see ordering information
Power consumption	≤ 3 VA

Measuring circuit	
Measuring range	100 mA…20 A
Rated transformation ratio	K_n (U -I): 100 mV/A, K_N (k -I): 1.67 mA/A
Rated burden (signal output k, l)	68 Ω
Rated frequency	42…2000 Hz
Rated continuous thermal current I_{cth}	1 kA
Rated short-time thermal current I_{th}	60 kA/1 s
Rated dynamic current I_{dyn}	150 kA/40 ms

Environment/EMC	
EMC	IEC 62020
Operating temperature	-25…+55 °C
Classification of climatic conditions acc. to IEC 60721 (except condensation and formation of ice)	
Stationary use (IEC 60721-3-3)	3K22
Transport (IEC 60721-3-2)	2K11
Long-time storage (IEC 60721-3-1)	1K22
Classification of mechanical conditions acc. to IEC 60721	
Stationary use (IEC 60721-3-3)	3M11
Transport (IEC 60721-3-2)	2M4
Long-time storage (IEC 60721-3-1)	1M12

Connection RCC420	
Connection type	push-wire terminal
Connection properties	
rigid	0.2…2.5 mm² (AWG 24-14)
flexible without ferrule	0.75…2.5 mm² (AWG 19-14)
flexible with ferrule	0.2…1.5 mm² (AWG 24-16)
Stripping length	10 mm
Opening force	50 N
Test opening, diameter	2.1 mm
Connection measuring current transformer W…F	PS/2 plug
Cable length WF…	2 m

Cable lengths RCMS-RCC420…	
Single wire ≥ 0.75 mm²	0…1 m
Single wire, twisted ≥ 0.75 mm²	0…10 m
Shielded cable ≥ 0.5 mm²	0…40 m
Shielded cable (shield to terminal I, not connected to earth)	recommended: J-Y(St)Y min. 2x0.8

Other		
Operating mode		continuous operation
Mounting		any position
Degree of protection, internal components (IEC 60529)		IP30
Degree of protection, terminals (IEC 60529)		IP30
Enclosure material RCC420		polycarbonate
Screw mounting		2 x M4 with mounting clip
DIN rail mounting acc. to		IEC 60715
Flammability class		UL94V-0
Documentation number		D00072
Weight		RCC 420 ≤ 160 g
	WF170 ≤ 160 g	WF800 ≤ 230 g
	WF250 ≤ 180 g	WF1200 ≤ 310 g
	WF500 ≤ 200 g	WF1800 ≤ 430g

Note: The measuring current transformer is adapted to the associated signal converter RCC420.

Dimension diagrams (dimensions in mm)

XM420 (RCC420)

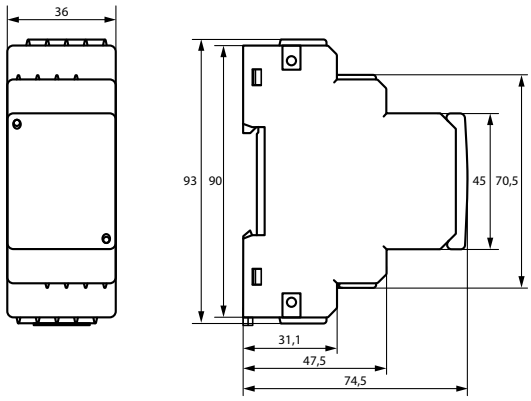

WF… measuring current transformers

A = For details about the length of the measuring current transformer refer to ordering information.

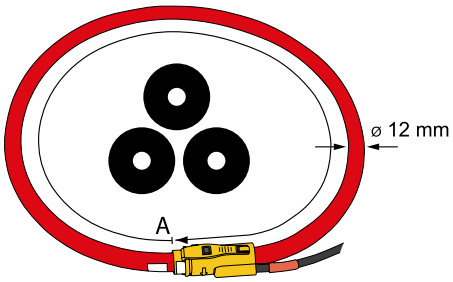

Dimension diagrams (dimensions in mm)

Locking connector measuring current transformer WF500…WF1800
Keep the locking connector clean

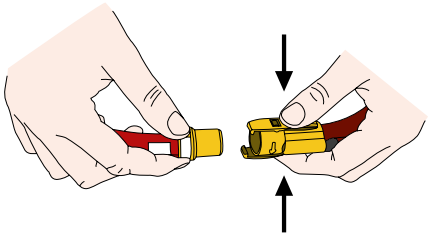

Locking connector WF170…WF250

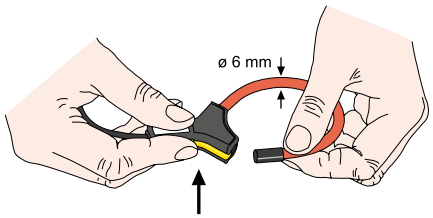

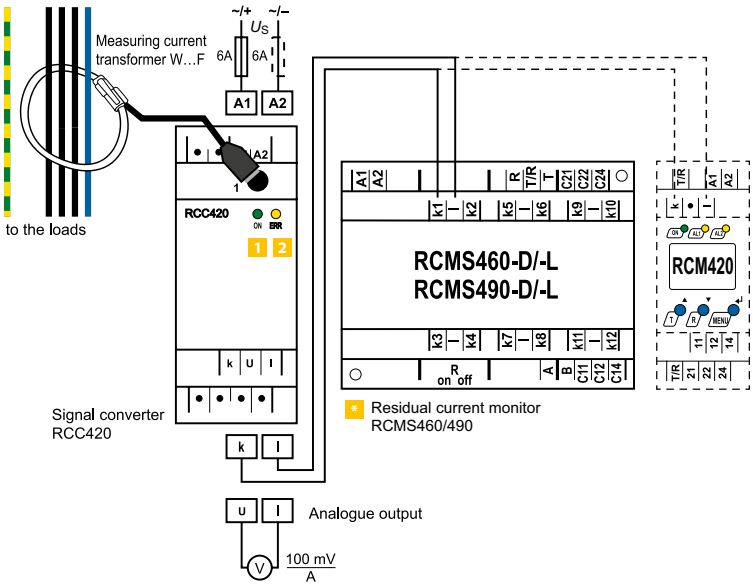

Connection to the respective RCMS460/490 residual monitoring system or to an RCM420 residual current monitor.

1 Power On LED “ON”: lights up when voltage is available and when the device is in operation

2 Alarm LED “ERR”: Lights in the event of a short circuit and interruption of the WF…

* When using software version D233 V 2.21 or an earlier version, switch off CT monitoring

When using software version D233 V 2.31 or higher, set the CT type to “flex”.

AGH150W-4

Coupling device

AC/DC

Typical applications

- Extension of the nominal voltage range for the ISOMETER®s iso685… series to AC 0…1150 V, DC 0…1760 V

Standards

The AGH150W(-4) complies with the requirements of

- DIN EN 45545-2.
- DIN EN 50155.

Approvals

AGH150W-4

Further information

For further information refer to our product range on www.bender.de.

Ordering information

Type	Nominal system voltage U_s	Art. No.
AGH150W	AC 0…1150 V / DC 0…1100 V	B915576
AGH150W-4	AC 0…1150 V / DC 0…1760 V	B98018006

Technical data

Insulation coordination acc. to DIN EN 61800-5-1 (VDE 0160-105-1)

AGH150W	
Rated insulation voltage	AC 1000 V
Voltage test acc. to IEC 60255	12 kV
Pollution degree	2
AGH150W-4	
Rated insulation voltage	AC 1600 V
Voltage test acc. to IEC 60255	17 kV
Pollution degree	2

Voltage test acc. to DIN EN 61800-5-1 (VDE 0160-105-1)

AGH150W	
Voltage impulse test (basic insulation)	≥ AC 8 kV
AC voltage test (basic insulation)	≥ AC 4.3 kV
AGH150W-4	
Voltage impulse test (basic insulation)	≥ AC 11 kV
AC voltage test (basic insulation)	≥ AC 6.6 kV

Voltage ranges

AGH150W	
Nominal system voltage U_n	AC 0…1150 V, DC 0…1100 V
Frequency range of $U_{n\ (sinus)}$	DC 1…460 Hz
Overvoltage category	CAT III
Rated impulse voltage	≥8 kV
Internal DC resistance R_i	80 kΩ
Tolerance of internal DC resistance R_i	±2 kΩ*
AGH150W-4	
Nominal system voltage U_n	AC 0…1150 V, DC 0…1760 V DC 0…1600 V (for UL applications)
Frequency range of $U_{n\ (sinus)}$	DC 1…460 Hz
Overvoltage category	CAT III
Rated impulse voltage	≥11 kV
Internal DC resistance R_i	≥160 kΩ
Tolerance of internal DC resistance R_i	±4 kΩ*

Environment

Class of extended operating temperature at switch-on	Class ST1
Operating altitude	≤ 2000 m AMSL
Ambient temperatures	
Operation	-10…+55 °C
Storage	-40…+70 °C
Classification of climatic conditions acc. to IEC 60721:	
Stationary use (IEC 60721-3-3)	3K22 (max. 98 % humidity)
Transport (IEC 60721-3-2)	2K11
Long-term storage (IEC 60721-3-1)	1K22
Classification of mechanical conditions acc. to IEC 60721:	
Stationary use (IEC 60721-3-3)	3M11
Transport (IEC 60721-3-2)	2M4
Long-term storage (IEC 60721-3-1)	1M12

Connection

Connection	flat terminals
Connection properties rigid/flexible	0.2…4/0.2…2.5 mm²

Other

Operating mode	continuous operation
Mounting	any position
Nominal power consumption	≤ 10 W at DC 1760 V
Degree of protection, internal components (DIN EN 60529)	IP30
Degree of protection, terminals (DIN EN 60529)	IP20
DIN rail mounting acc. to	IEC 60715
Flammability class	UL94 V-0
Documentation number	D00093
Weight	≤ 900 g

* The tolerance range affects the measured value of the insulation monitoring device used and must be taken into account accordingly

Dimension diagram (dimensions in mm)

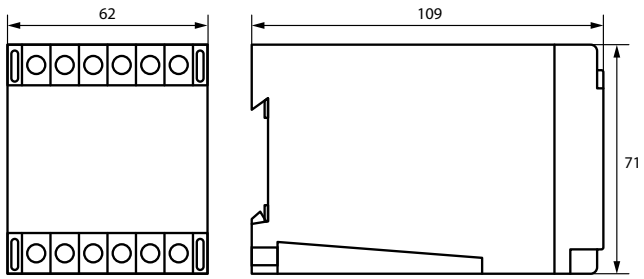

Wiring diagram

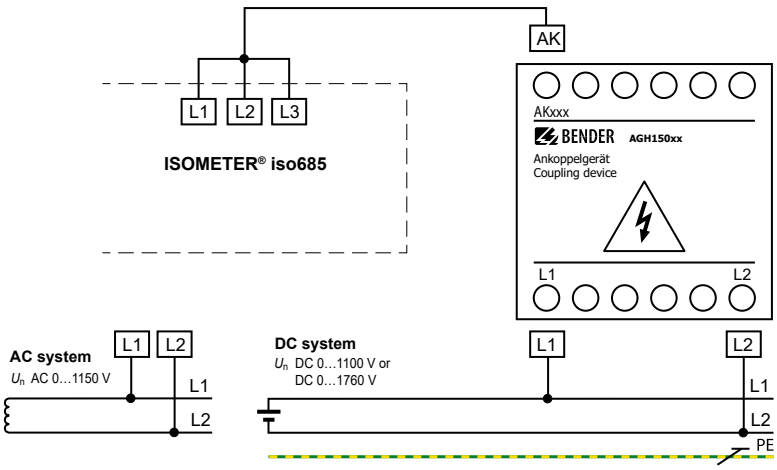

AGH204S-4

Coupling device

AC/DC

Typical applications

- Extension of the nominal voltage range to AC, 3(N)AC 0…1650 V/0…1300 V, 50… 400 Hz for the ISOMETER®s iso685… series.

Approvals

Further information

For further information refer to our product range on www.bender.de.

Ordering information

Type	Nominal system voltage U_s	Art. No.
AGH204S-4	AC 0…1650 V/0…1300 V	B914013

Technical data

Insulation coordination acc. to DIN EN 61800-5-1 (VDE 0160-105-1)	
Rated insulation voltage	AC 1500 V
Rated impulse voltage	≥10.4 kV
Overvoltage category	III
Voltage test acc. to DIN EN 61800-5-1 (VDE 0160-105-1)	
Impulse voltage test (basic insulation)	≥ AC 10.4 kV
AC voltage test (basic insulation)	≥ AC 5 kV
Partial discharge test	≥ 3 kV
Voltage ranges	
Nominal system voltage U_n (including DC components)	0…1300 V
Nominal system voltage U_n (AC only)	0…1650 V
Nominal system voltage U_n for UL applications	0…1500 V
Frequency range of U_n	DC 1…440 Hz
Internal DC resistance R_i coupling to AK80	80 kΩ
Internal DC resistance R_i coupling to AK160	160 kΩ
Environment	
Ambient temperature	
Operation	-10…+55 °C
Storage	-40…+70 °C
Classification of climatic conditions acc. to IEC 60721	3K22
Shock resistance	
Operation (IEC 60068-2-27)	15 g / 11 ms
Transport (IEC 60068-2-29)	40 g / 6 ms
Vibration resistance acc to IEC 60068-2-6	
Operation	1 g / 10…150 Hz
Transport	2 g / 10…150 Hz
Connection	
Connection	screw-type terminals
Connection properties rigid/flexible	0.2…4 mm²/0.2…2.5 mm²
Tightening torque	0.5 Nm
Conductor sizes	AWG 24-12
Length of the connecting lead (ISOMETER® to AGH)	≤ 0.5 m
Other	
Operating mode	continuous operation
Mounting	any position
Degree of protection, internal components (DIN EN 60529)	IP30
Degree of protection, terminals (DIN EN 60529)	IP20
Type of enclosure	X112, free from halogen
Screw mounting	2 x M4
DIN rail mounting	IEC 60715
Flammability class	UL94 V-0
Documentation number	D00094
Weight	≤ 1350 g

Dimension diagram (dimensions in mm)

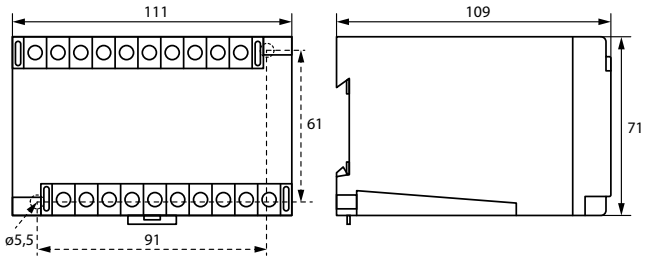

Wiring diagram

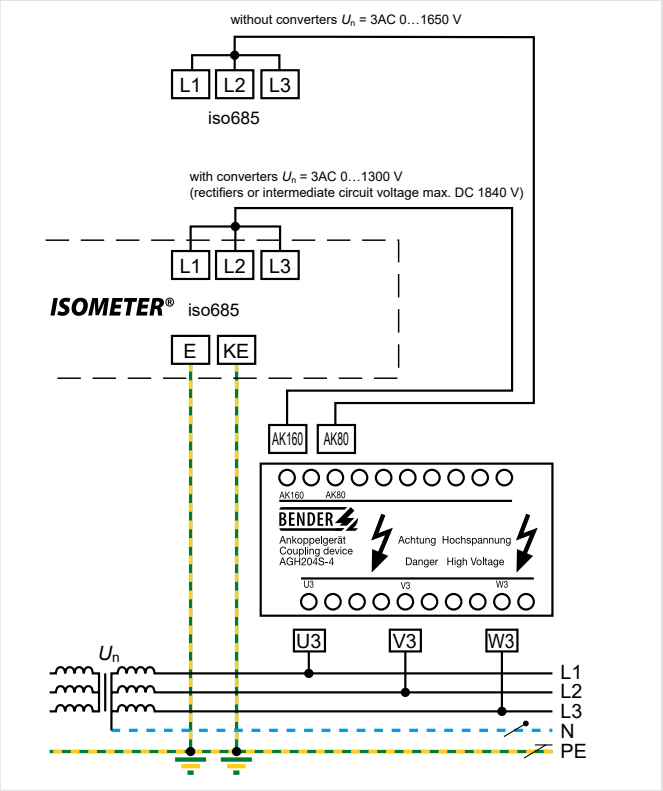

AGH520S

Coupling device

AC

Typical applications

- Extension of the nominal voltage range to (3)AC 0…7200 V, 50…400 Hz for the ISOMETER®s iso685… series.

Approvals

Further information

For further information refer to our product range on www.bender.de.

Ordering information

Type	Nominal system voltage U_s	Art. No.
AGH520S	3(N)AC 0…7200 V	B913033

Technical data

Insulation coordination acc. to IEC 61800-5-1

Operating voltage	AC 6.3 kV

Voltage test according to IEC 61800-5-1

Impulse voltage test (basic insulation)	AC 35 kV
Overvoltage category	III
AC voltage test (basic insulation)	AC 17.5 kV
Partial discharge test	12 kV

Voltage ranges

Nominal system voltage U_n	0…7.2 kV
Nominal system voltage U_n for UL applications	0…6,0 kV
Nominal frequency f_n	DC 50…400 Hz
Internal DC resistance R_i	≥ 80 kΩ
Impedance Z_i at 7.2 kV and 50 Hz	≥ 6 MΩ

Environmental conditions

Ambient temperatures	
Operation	-10…+55 °C
Operation UL-Applications	-10…+45 °C
Storage	-40…+70 °C
Classification of climatic conditions acc. to IEC 60721	3K22
Classification of mechanical conditions acc. to IEC 60721:	
Stationary use (IEC 60721-3-3	3M11
Transport (IEC 60721-3-2)	2M4
Storage (IEC 60721-3-1)	1M12

Connection

Connection terminal 2 (medium voltage)	screw-type terminals
Connection terminals 3-5	screw-type terminals
Connection properties	
rigid/flexible	0.2…4 mm²/ 0.2…2.5 mm²
AWG	24-12
Tightening torque	2.9 Nm

General data

Operating mode	continuous operation
Position	any position
Degree of protection, internal components (DIN EN 60529)	IP64
Degree of protection, terminals (DIN EN 60529)	IP20
Type of enclosure	resin-encapsulated block in housing
Screw mounting	4 x M5
Flammability class	UL94 V-HB
Documentation number	D00073
Weight	4500 g

Dimension diagram (dimensions in mm)

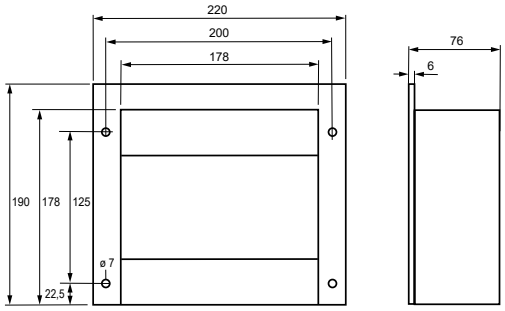

Wiring diagram online mode

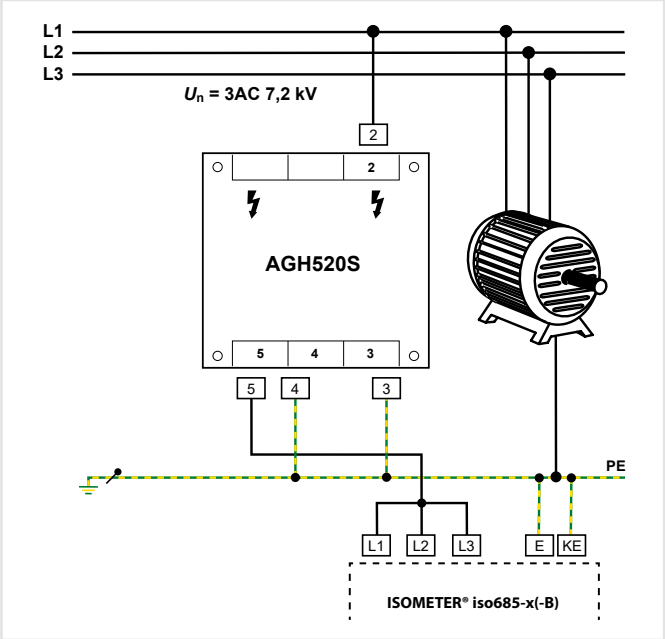

AGH675S-7/AGH675S-7MV15

Coupling device

AC/DC

Typical applications

- Extension of the nominal voltage range to AC/DC 0…15.5 kV for the ISOMETER® IRDH275BM-7

Approvals

Further information

For further information refer to our product range on www.bender.de.

Ordering information

Type	Nominal system voltage U_n	Cable length	Art. No.
AGH675S-7-500	AC/DC 0…7.2 kV, 0…460 Hz	500 mm	B913060
AGH675S-7-2000		2000 mm	B913061
AGH675S-7-MV15-500	AC/DC 0… 15.5 kV, 0…460 Hz	500 mm	B913058

Technical data

Insulation coordination acc. to DIN EN 61800-5-1 (VDE 0160-105-1)

AGH675S-7	
Rated insulation voltage	AC 7.2 kV
AGH675S-7MV15	
Rated insulation voltage	AC 15.5 kV

Voltage test according to DIN EN 61800-5-1 (VDE 0160-105-1)

AGH675S-7	
AC voltage test (basic insulation)	≥ AC 40 kV
AC voltage test (basic insulation)	≥ AC 20 kV
Partial discharge test	≥ 14 kV
AGH675S-7MV15	
Impulse voltage test (basic insulation)	≥ AC 111 kV
AC voltage test (basic insulation)	≥ AC 70 kV
Partial discharge test	≥ 29 kV

Voltage ranges

AGH675S-7	
Nominal system voltage U_n	AC, 3(N)AC, DC 0…7.2 kV
Nominal frequency f_n	0…460 Hz
Frequency range of U_n (sinus)	DC 1…460 Hz
Internal DC resistance R_i	≥ 2.39 MΩ
AGH675S-7MV15	
Nominal system voltage U_n	AC, 3(N)AC, DC 0…15.5 kV
Nominal frequency f_n	0…460 Hz
Frequency range of U_n (sinus)	DC 1…460 Hz
Internal DC resistance R_i	≥ 4.7 MΩ

Environment/EMC

Ambient temperature	
Operation	-10…+55 °C
Storage	-40…+70 °C
Classification of climatic conditions acc. to IEC 60721:	
Stationary use (IEC 60721-3-3)	3K22
Transport (IEC 60721-3-2)	2K11
Long-term storage (IEC 60721-3-1)	1K22
Classification of mechanical conditions acc. to IEC 60721:	
Stationary use (IEC 60721-3-3)	3M11
Transport (IEC 60721-3-2)	2M4
Long-term storage (IEC 60721-3-1)	1M12

Connection

Connection terminal 2 (medium voltage)	high-voltage cable (encapsulated on the device side)
Connection, flexible with ring eyelet	M4
Connection type terminals 3, 4, 5	screw-type terminals
Connection rigid/flexible	0.2…4 mm²/0.2…2.5 mm²
Tightening torque	0.5 Nm

Other

Operating mode	continuous operation
Mounting	any position
Degree of protection, internal components (DIN EN 60529)	IP64
Degree of protection, terminals (DIN EN 60529)	IP20
Type of enclosure	resin-encapsulated block
Screw mounting	6 x M5
Flammability class	UL94 V-HB
Documentation number	D00095
Weight	≤ 5100 g

Dimension diagram (dimensions in mm)

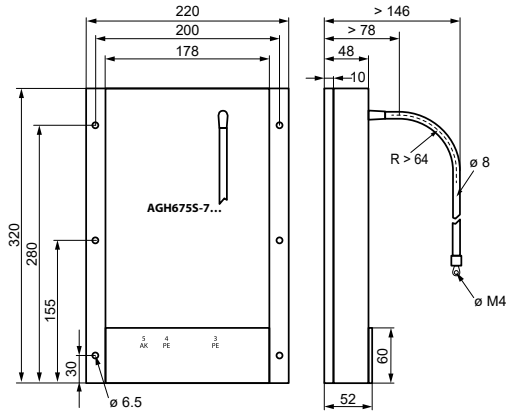

Wiring diagram

AGH675S-7

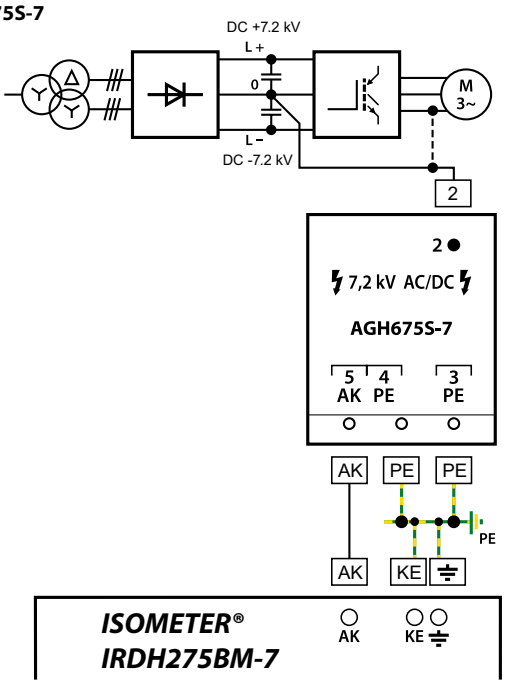

AGH675S-7MV15

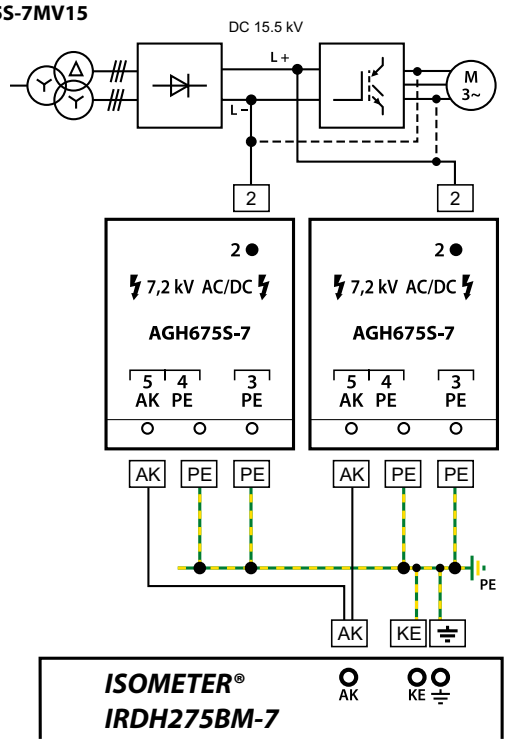

Both AKs (one from each coupling device) are bridged and coupled with the AK from the IRDH275BM-7.

AGH676S-4

Coupling device

AC

Typical applications

- Extension of the nominal voltage range to AC, 3(N)AC 0…12 kV, 50…460 Hz for the ISOMETER®s iso685… series and IR420-D64

Approvals

Further information

For further information refer to our product range on www.bender.de.

Ordering information

Type	Nominal system voltage U_S	Cable length	Art. No.
AGH676S-4	AC, 3(N)AC 0…12 kV, 50…460 Hz	2000 mm	B913055

Technical data

Insulation coordination acc. to IEC 61800-5-1	
Rated insulation voltage	AC 12 kV
Voltage test acc. to IEC 61800-5-1	
Type test	
Voltage impulse test	≥ AC 75 kV
AC voltage test	≥ AC 45 kV
Partial discharge test	≥ 16.5 kVeff
Routine test	
AC voltage test, rate of increase < 2 kV/s	AC 25 kV
Voltage ranges	
Nominal system voltage Un	AC / 3(N)AC 0...12 kV
Nominal frequency fn	50...460 Hz
Internal DC resistance Ri	≥ 160 kΩ
Impedance Zi at 12 kV and 50 Hz	≥ 12 MΩ
Environmental conditions	
Shock resistance IEC 60068-2-27 (during operation)	15 g/11 ms
Bumping IEC 60068-2-29 (during transport)	40 g/6 ms
Vibration resistance IEC 60068-2-6 (during operation)	1 g / 10…150 Hz
Vibration resistance IEC 60068-2-6 (during transport)	2 g / 10…150 Hz
Ambient temperature, during operation	-10…+55 °C
Storage temperature range	-40…+70 °C
Climatic class acc. to IEC 60721-3-3	3K22

Connection	
Connection medium voltage	high-voltage cable (encapsulated on the device side)
Connection, flexible with ring terminal	M8
Connection terminals 3, 4, 5	screw terminals
Connection properties rigid/flexible	0.2…4 mm²/0.2…2.5 mm²
Other	
Operating mode	continuous operation
Position	any position
Degree of protection, internal components (DIN EN 60529)	IP64
Degree of protection, terminals (DIN EN 60529)	IP20
Type of enclosure	resin-encapsulated block
Screw fixing	M5
Flammability class	UL94 HB
Documentation number	D00096
Weight	≤ 8400 g

Dimension diagram (dimensions in mm)

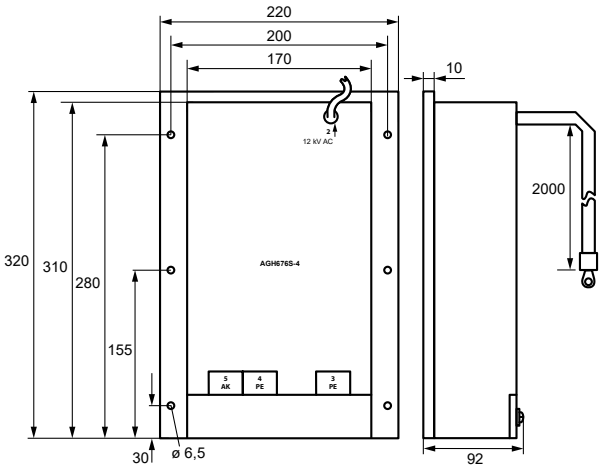

Wiring diagram offline (IR420-D64)

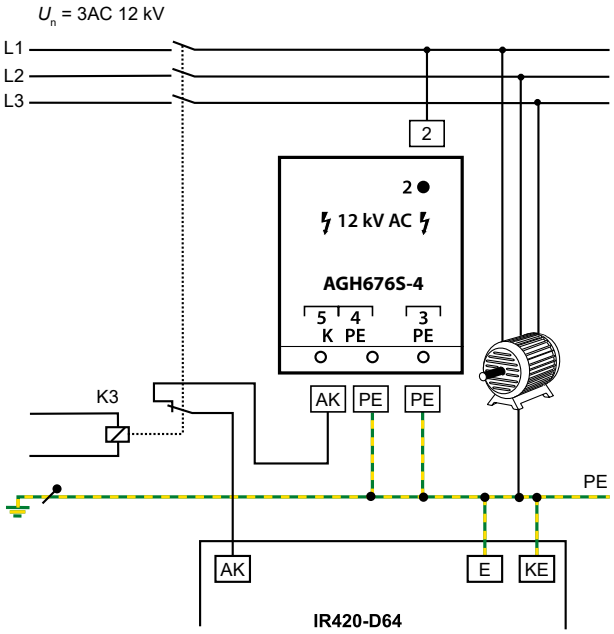

Wiring diagram online (iso685)

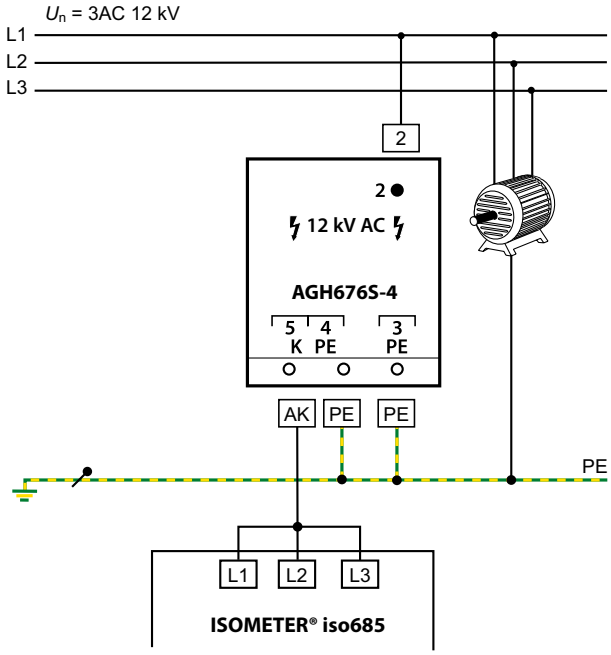

Isolating transformer ES710

Single-phase isolating transformers for the design of medical IT systems

Typical applications

- For IT systems in medical locations

Approvals

VDE test mark for all ES710/3150… ES710/10000 and ES…GL types, ES…SK2, ES…SN-GL are not VDE certified,

Device features

- Built-in temperature sensors acc. to DIN 44081 (120 °C)
- Screen winding with brought-out insulated connection terminal
- Insulated mounting angles
- Degree of protection, IP00 (open design)
- Degree of protection, IP23 (with enclosure)
- Protection class I
- Protection class II (option: encapsulated version)
- Reinforced insulation
- Classification of insulation: ta40/B
- Connections: screw terminals
- Noise level < 35 dB (A)(no-load and nominal load)
- Vector group: IiO
- Inrush current I_E GL version < 8 x $\hat{I}_n$

Standards

ES710 isolating transformers comply with the device standards and the regulations for installation:

- DIN EN 61558-1 (VDE 570-1)
- IEC 61558-1
- DIN VDE 0100-710 (VDE 0100-710)
- DIN EN 61558-2-15 (VDE 0570-2-15)
- IEC 61558-2-15
- IEC 60364-7-710

Further information

For further information refer to our product range on www.bender.de.

Technical data

Type	ES710/3150	ES710/4000	ES710/5000	ES710/6300	ES710/8000	ES710/10000
Power/voltages/currents						
Rated power	3150 VA	4000 VA	5000 VA	6300 VA	8000 VA	10000 VA
Rated frequency	50…60 Hz	50…60 Hz	50…60 Hz	50…60 Hz	50…60 Hz	50…60 Hz
Rated input voltage	AC 230 V	AC 230 V	AC 230 V	AC 230 V	AC 230 V	AC 230 V
Rated input current	14.2 A	18 A	22.5 A	28.5 A	36 A	45.3 A
Rated output voltage	AC 230/115 V	AC 230/115 V	AC 230/115 V	AC 230/115 V	AC 230/115 V	AC 230/115 V
Rated output current	13.7 A	17.4 A	21.7 A	27.4 A	34.7 A	43.5 A
Inrush current I_E	< 12 x $\hat{I}_n$	< 12 x $\hat{I}_n$	< 12 x $\hat{I}_n$	< 12 x $\hat{I}_n$	< 12 x $\hat{I}_n$	< 12 x $\hat{I}_n$
Inrush current I_E GL version	< 8 x $\hat{I}_n$	< 8 x $\hat{I}_n$	< 8 x $\hat{I}_n$	< 8 x $\hat{I}_n$	< 8 x $\hat{I}_n$	< 8 x $\hat{I}_n$
Leakage current	≤ 0.5 mA	≤ 0.5 mA	≤ 0.5 mA	≤ 0.5 mA	≤ 0.5 mA	≤ 0.5 mA
No-load input current i_0	≤ 3 %	≤ 3 %	≤ 3 %	≤ 3 %	≤ 3 %	≤ 3 %
No-load input current i_0 GL version	≤ 2 %	≤ 2 %	≤ 2 %	≤ 2 %	≤ 2%	≤ 2%
No-load output voltage U_0	≤ 236 V	≤ 234 V	≤ 234 V	≤ 235 V	≤ 233 V	≤ 233 V
Short-circuit voltage U_k	≤ 3 %	≤ 3 %	≤ 3 %	≤ 3 %	≤ 3 %	≤ 3 %
Environmental conditions						
Ambient temperature	≤ 40 °C	≤ 40 °C	≤ 40 °C	≤ 40 °C	≤ 40 °C	≤ 40 °C
No-load temperature rise	≤ 20 °C	≤ 23 °C	≤ 26 °C	≤ 23 °C	≤ 35 °C	≤ 37 °C
Full-load temperature rise	≤ 69 °C	≤ 48 °C	≤ 62 °C	≤ 65 °C	≤ 70 °C	≤ 70 °C
Noise level (under no-load conditions and nominal load)	≤ 35 dB(A)	≤ 35 dB(A)	≤ 35 dB(A)	≤ 35 dB(A)	≤ 35 dB(A)	≤ 35 dB(A)
Other						
Insulation classification	t_a40/B	t_a40/B	t_a40/B	t_a40/B	t_a40/B	t_a40/B
Degree of protection	IP00	IP00	IP00	IP00	IP00	IP00
Protection class	I/II*	I/II*	I/II*	I/II*	I/II*	I/II*
Core U/I	180/93	210/63	210/73	210/88	210/103	240/83
Core U/I GL version	180/93	210/63	210/73	210/88	210/103	210/120
Recommended use when used in accordance with DIN VDE 0100-710	25 A gL/gG	35 A gL/gG	50 A gL/gG	50 A gL/gG	63 A gL/gG	80 A gL/gG
Recommended use when used in accordance with DIN VDE 0100-710 GL version	25 A gL/gG	25 A gL/gG	35 A gL/gG	50 A gL/gG	50 A gL/gG	63 A gL/gG
Induction	0.86 T	0.94 T	1.00 T	1.05 T	1.05 T	1.05 T
$R_{primary}$ ±5 %	0.255 Ω	0.135 Ω	0.100 Ω	0.080 Ω	0.064 Ω	0.050 Ω (-GL 0,054)
$R_{secondary}$ ±5 %	0.230 Ω	0.110 Ω	0.095 Ω	0.070 Ω	0.056 Ω	0.036 Ω (-GL 0,045)
Efficiency	95 %	96 %	96 %	96 %	96 %	96 %
Documentatin number: D00109						
Loss at 20…22 ° C ambient temperature						
Fe loss (iron loss)	< 55 W	< 60 W	< 80 W	< 105 W	< 110 W	< 150 W
Fe loss (iron loss) GL version	< 18 W	< 20 W	< 26 W	< 33 W	< 38 W	< 42 W
Cu loss (copper loss)	< 90 W	< 80 W	< 100 W	< 125 W	< 165 W	< 190 W
Cu loss (copper loss) GL version	< 90 W	< 80 W	< 100 W	< 125 W	< 165 W	< 205 W
Heat dissipation loss at 40 ° C ambient temperature and 100 % continuous load						
Heat dissipation loss	< 165 W	< 160 W	< 202 W	< 265 W	< 320 W	< 380 W
Heat dissipation loss GL version	< 125 W	< 115 W	< 140 W	< 185 W	< 230 W	< 270 W

* Option: completely encapsulated version
Energy efficient version GL = Green Line

Green Line transformer (energy efficient version) – High degree of energy saving over the life time (16 years AfA) (German AfA table for depreciation of wear and tear)

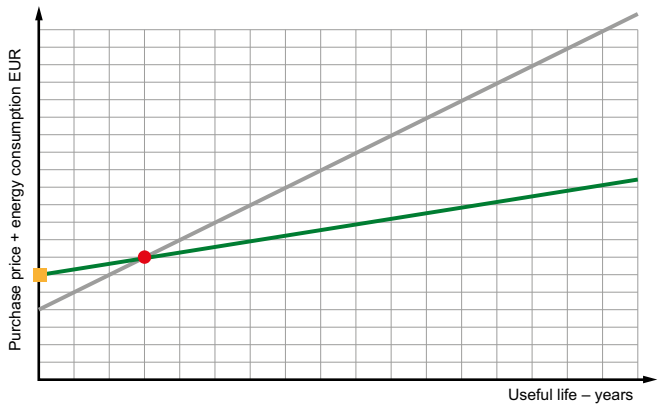

This general illustration is based on calculations of the transformer's energy consumption while energy costs remained constant at 13.4 ct/kWh (source: first energy) for 16 years. The wide variety of bandwidths result from the different transformer capacities.

Afa = Deprecation of wear and tear
— = Standard version
— = GL version (Green Line)
■ = A higher purchase price of approx. 15-20%
● = ROI (Return on Investment) after about 1-3 years

Standard

Dimension B is the depth incl. terminals

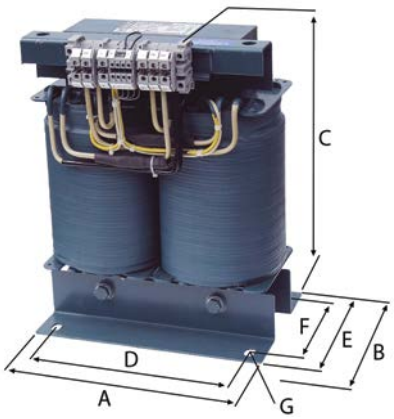

SK2 series

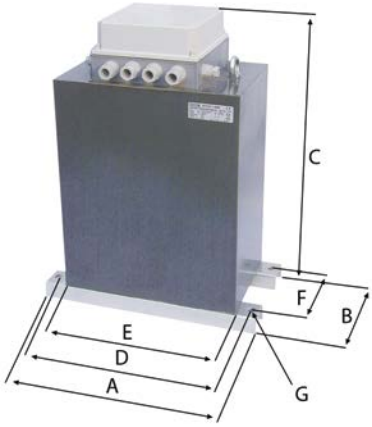

S series

Dimension E is the depth incl. terminals

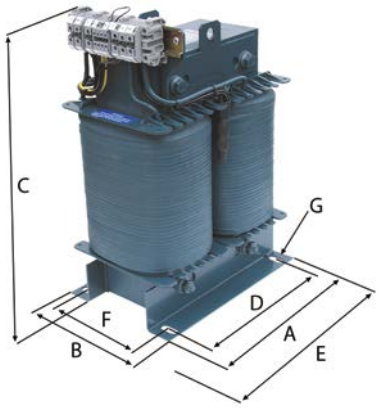

K series

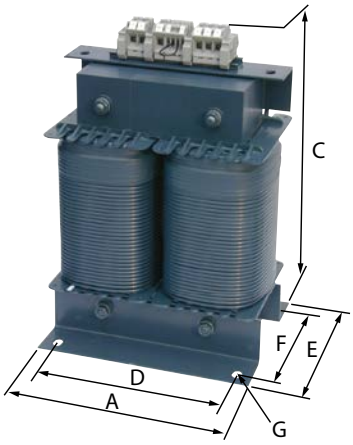

LG series

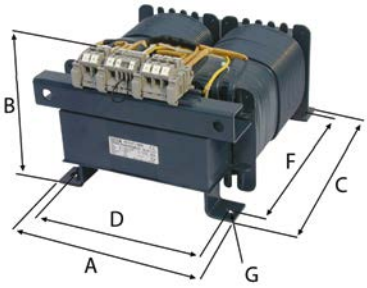

SN-GL series

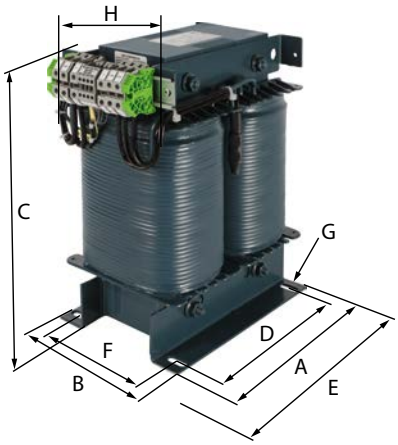

Enclosure ESDS0107-1

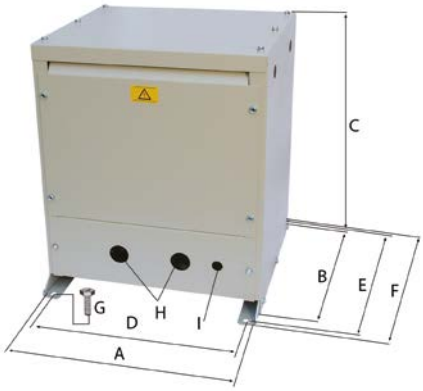

Enclosure ESDS710

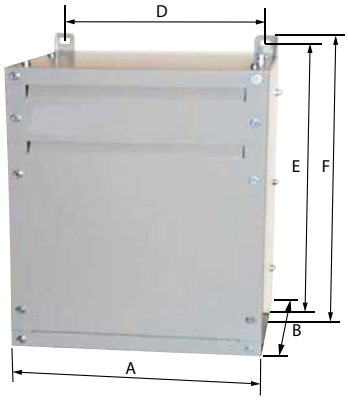

	Dimensions (mm)							Cu weight (kg)	Weight (kg)	Core U/I	Type	Art. No.
	A	B	C	D	E	F	G					
GL series	240	230	325	200	180	145	11 x 28	15	49	180/93	ES710/3150-GL	B92090001
	280	200	370	240	150	115	11 x 28	24	59	210/63	ES710/4000-GL	B92090002
	280	210	370	240	160	125	11 x 28	25	61	210/73	ES710/5000-GL	B92090003
	280	225	370	240	175	140	11 x 28	26	65	210/88	ES710/6300-GL	B92090004
	280	240	370	240	190	155	11 x 28	27	74	210/103	ES710/8000-GL	B92090005
	280	255	370	240	205	170	11 x 28	33	85	210/120	ES710/10000-GL	B92090006
S-GL series	280	180	370	240	290	145	11 x 28	15	49	180/93	ES710/3150S-GL	B92090061
	280	150	420	240	290	115	11 x 28	24	59	210/63	ES710/4000S-GL	B92090062
	280	160	420	240	290	125	11 x 28	25	61	210/73	ES710/5000S-GL	B92090063
	280	175	420	240	290	140	11 x 28	26	65	210/88	ES710/6300S-GL	B92090064
	280	190	420	240	290	155	11 x 28	27	74	210/103	ES710/8000S-GL	B92090065
	280	205	420	240	290	170	11 x 28	33	85	210/120	ES710/10000S-GL	B92090066
SN-GL series	280	180	370	240	290	145	11 x 28	15	49	180/93	ES710/3150SN-GL	B92090121
	280	150	370	240	320	115	11 x 28	24	59	210/63	ES710/4000SN-GL	B92090122
	280	160	370	240	320	125	11 x 28	25	61	210/73	ES710/5000SN-GL	B92090123
	280	175	370	240	320	140	11 x 28	26	65	210/88	ES710/6300SN-GL	B92090124
	280	190	370	240	320	155	11 x 28	27	74	210/103	ES710/8000SN-GL	B92090125
	280	205	375	240	325	170	11 x 28	33	85	210/120	ES710/10000SN-GL	B92090126
Standard	240	230	325	200	180	145	11 x 28	15	49	180/93	ES710/3150	B924211
	280	200	370	240	150	115	11 x 28	24	59	210/63	ES710/4000	B924212
	280	210	370	240	160	125	11 x 28	25	61	210/73	ES710/5000	B924213
	280	225	370	240	175	140	11 x 28	26	65	210/88	ES710/6300	B924214
	280	240	370	240	190	155	11 x 28	27	74	210/103	ES710/8000	B924215
	320	260	420	270	200	160	13 x 35	39	85	240/83	ES710/10000	B924216
K series	240		360	200	180	145	11 x 28	15	49	180/93	ES710/3150K	B924221
	280		420	240	150	115	11 x 28	24	59	210/63	ES710/4000K	B924222
	280		420	240	160	125	11 x 28	25	61	210/73	ES710/5000K	B924223
	280		420	240	175	140	11 x 28	26	65	210/88	ES710/6300K	B924224
	280		420	240	190	155	11 x 28	27	74	210/103	ES710/8000K	B924225
	320		480	270	200	160	13 x 35	39	85	240/83	ES710/10000K	B924226
LG series	230	235	320	204		240	9 x 14	15	49	180/93	ES710/3150LG	B924231
	260	210	365	234		280	9 x 14	24	59	210/63	ES710/4000LG	B924232
	260	220	365	234		280	9 x 14	25	61	210/73	ES710/5000LG	B924233
	260	235	365	234		280	9 x 14	26	65	210/88	ES710/6300LG	B924234
	260	250	365	234		280	9 x 14	27	74	210/103	ES710/8000LG	B924235
	294	240	410	264		320	13 x 20	39	85	240/83	ES710/10000LG	B924236
SK2 series	380	200	450	350	270	150	11 x 16	15	69	180/93	ES710/3150SK2	B924241
	380	190	500	350	310	150	11 x 16	24	75	210/63	ES710/4000SK2	B924242
	380	200	500	350	310	160	11 x 16	25	77	210/73	ES710/5000SK2	B924243
	380	215	500	350	310	175	11 x 16	26	86	210/88	ES710/6300SK2	B924244
	380	230	500	350	310	190	11 x 16	27	90	210/103	ES710/8000SK2	B924245
	410	240	560	380	350	200	11 x 16	39	105	240/83	ES710/10000SK2	B924246
S series	280	180	370	240	290	145	11 x 28	15	49	180/93	ES710/3150S	B924261
	280	150	420	240	290	115	11 x 28	24	59	210/63	ES710/4000S	B924262
	280	160	420	240	290	125	11 x 28	25	61	210/73	ES710/5000S	B924263
	280	175	420	240	290	140	11 x 28	26	65	210/88	ES710/6300S	B924264
	280	190	420	240	290	155	11 x 28	27	74	210/103	ES710/8000S	B924265
	320	200	440	270	330	160	13 x 35	39	85	240/83	ES710/10000S	B924266

Ordering information enclosure

Dimensions (mm)									Weight (kg)	Version	Type	Art. No.
A	B	C	D	E	F	G	H	I				
430	380	500	385	420	450	M10	ø 37,5	ø 20,5	16	floor mounting	ESDS0107-1	B924673
350	300		315	550	580				18	hanging mounting	ESDS710	B924741

Nameplate

ES: single-phase isolating transformer
DS: three-phase isolating transformer
Nominal power

ES710/3150SK2

Type series without = standard
K = terminals on top
LG = horizontal position
SK2 = encapsulation according to protection class II
S = terminals on top side end
S-GL = terminals front side (energy efficient)
SN-GL = terminals front side, low type of construction (energy efficient)

Wiring diagram

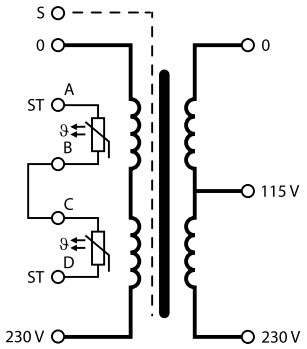

Terminal diagram

Standard, K series, LG series
S series, S-GL series, SN-GL series

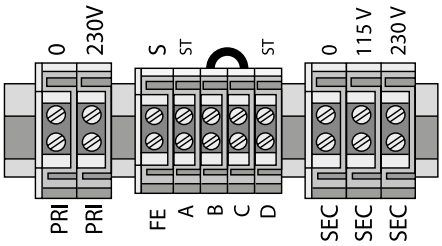

SK2 series

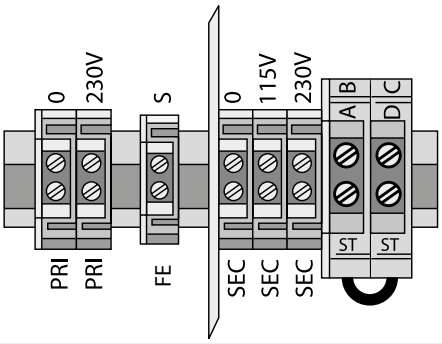

Connection properties

Type	Input terminals flexible/rigid	Screen winding flexible/rigid	Control terminals flexible/rigid	Control terminals for protection class II flexible/rigid	Output terminals flexible/rigid
ES710/3150	16/25 mm²	16/25 mm²	4/6 mm²	2.5/4 mm²	16/25 mm²
ES710/4000	16/25 mm²	16/25 mm²	4/6 mm²	2.5/4 mm²	16/25 mm²
ES710/5000	16/25 mm²	16/25 mm²	4/6 mm²	2.5/4 mm²	16/25 mm²
ES710/6300	16/25 mm²	16/25 mm²	4/6 mm²	2.5/4 mm²	16/25 mm²
ES710/8000	16/25 mm²	16/25 mm²	4/6 mm²	2.5/4 mm²	16/25 mm²
ES710/10000	35/35 mm²	35/35 mm²	4/6 mm²	2.5/4 mm²	35/35 mm²

Isolating transformers DS0107

Three-phase isolating transformers for the supply of three-phase loads in medical locations

Typical applications

- For IT systems in medical locations

Approvals

Device features

- Built-in temperature sensors acc. to DIN 44081 (120 °C)
- Screen winding with brought-out insulated connection terminal
- Insulated mounting angles
- Degree of protection, IP00 (open design)
- Degree of protection, IP23 (with enclosure)
- Protection class I
- Protection class II (option: encapsulated version)
- Reinforced insulation
- Classification of insulation ta40/B
- Connections: screw terminals
- Noise level < 35 dB (A)(no-load and nominal load)
- Vector group: Yyn O

Standards

DS0107 isolating transformers comply with the device standards and the regulations for installation:

- DIN EN 61558-1 (VDE 570-1)
- IEC 61558-1
- DIN VDE 0100-710 (VDE 0100-710)
- DIN EN 61558-2-15 (VDE 0570-2-15)
- IEC 61558-2-15
- IEC 60364-7-710

Note:

- According to DIN VDE 0100-710 (VDE 0100-710), para. 710.512.1.6.2, single -phase transformers shall be used for the erection of medical IT systems.
- The transformers of the DS0107 series are not suitable for the erection and installation of medical IT systems.

Further information

For further information refer to our product range on www.bender.de.

Technical data

Type	DS0107/2000	DS0107/3150	DS0107/4000	DS0107/5000	DS0107/6300	DS0107/8000	DS0107/10000
Insulation classification	t_a 40/B	t_a 40/B	t_a 40/B	t_a 40/B	t_a 40/B	t_a 40/B	t_a 40/B
Degree of protection	IP00	IP00	IP00	IP00	IP00	IP00	IP00
Protection class	I/II*	I/II*	I/II*	I/II*	I/II*	I/II*	I/II*
Power/voltages/currents							
Rated power	2000 VA	3150 VA	4000 VA	5000 VA	6300 VA	8000 VA	10000 VA
Rated frequency	50…60 Hz	50…60 Hz	50…60 Hz	50…60 Hz	50…60 Hz	50…60 Hz	50…60 Hz
Rated input voltage	3AC 400 V	3AC 400 V	3AC 400 V	3AC 400 V	3AC 400 V	3AC 400 V	3AC 400 V
Rated input current	3 A	4.9 A	6.1 A	7.7 A	9.8 A	12.2 A	15.6 A
Rated output voltage	3NAC 230 V	3NAC 230 V	3NAC 230 V	3NAC 230 V	3NAC 230 V	3NAC 230 V	3NAC 230 V
Rated output current	5 A	7.9 A	10 A	12.6 A	15.8 A	20.1 A	25.2 A
Inrush current I_E	< 12 x $\hat{I}$n	< 12 x $\hat{I}$n	< 12 x $\hat{I}$n	< 12 x $\hat{I}$n	< 12 x $\hat{I}$n	< 12 x $\hat{I}$n	< 12 x $\hat{I}$n
Leakage current	≤ 0.5 mA	≤ 0.5 mA	≤ 0.5 mA	≤ 0.5 mA	≤ 0.5 mA	≤ 0.5 mA	≤ 0.5 mA
No-load input current i_0	≤ 3.0 %	≤ 3.0 %	≤ 3.0 %	≤ 3.0 %	≤ 3.0 %	≤ 3.0 %	≤ 3.0 %
No-load output voltage u_0	≤ 232 V	≤ 235 V	≤ 234 V	≤ 236 V	≤ 236 V	≤ 235 V	≤ 235 V
Short-circuit voltage u_k	≤ 2.9 %	≤ 2.9 %	≤ 2.8 %	≤ 3 %	≤ 2.8 %	≤ 2.8 %	≤ 2.5 %
Environmental conditions							
Ambient temperature	≤ 40 °C	≤ 40 °C	≤ 40 °C	≤ 40 °C	≤ 40 °C	≤ 40 °C	≤ 40 °C
No-load temperature rise	≤ 25 °C	≤ 21 °C	≤ 24 °C	≤ 28 °C	≤ 24 °C	≤ 27 °C	≤ 32 °C
Full-load temperature rise	≤ 50 °C	≤ 50 °C	≤ 53 °C	≤ 67 °C	≤ 60 °C	≤ 72 °C	≤ 75 °C
Noise level (no load and full load)	≤ 35 dB(A)	≤ 35 dB(A)	≤ 35 dB(A)	≤ 35 dB(A)	≤ 35 dB(A)	≤ 35 dB(A)	≤ 35 dB(A)
Other							
Recommended fuse when used in accordance with DIN VDE 0100-710	10 A gL/gG	16 A gL/gG	20 A gL/gG	20 A gL/gG	25 A gL/gG	35 A gL/gG	35 A gL/gG
Induction	1.0 T	0.8 T	0.86 T	0.8 T	0.8 T	0.8 T	0.82 T
$R_{primary}$	1.12 Ω	0.7 Ω	0.42 Ω	0.38 Ω	0.33 Ω	0.26 Ω	0.13 Ω
$R_{secondary}$	0.27 Ω	0.17 Ω	0.13 Ω	0.12 Ω	0.07 Ω	0.055 Ω	0.05 Ω
FE loss (iron loss)	45 W	51 W	70 W	75 W	80 W	96 W	120 W
Cu loss (copper loss)	60 W	105 W	115 W	170 W	200 W	255 W	270 W
Efficiency	95 %	96 %	95 %	95 %	96 %	96 %	96 %
Documentation number: D00105							

* Option: completely encapsulated version

Dimension diagrams

Standard – Dimension B: depth incl. terminals

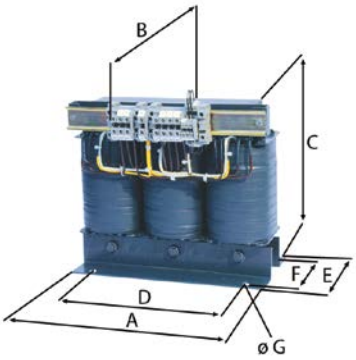

SK2 series

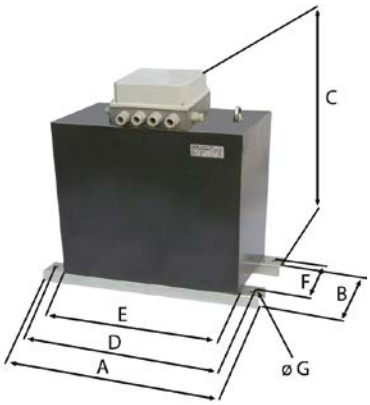

K series

All other dimensions correspond to the standard dimensions.

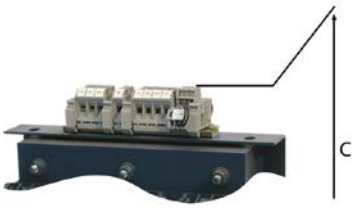

LG series

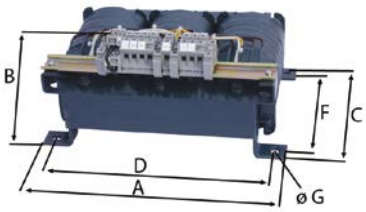

Isolating transformer enclosure

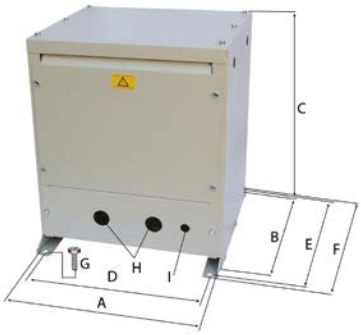

Ordering information

	Dimensions (mm)							Cu weight (kg)	Weight (kg)	Type	Art. No.
	A	B	C	D	E	F	G				
Standard	300	200	270	240	160	130	11	16	34	DS0107/2000	B924694
	360	210	325	310	170	135	11	28	63	DS0107/3150	B924106
	360	225	325	310	185	150	11	29	70	DS0107/4000	B924121
	360	240	325	310	200	165	11	31	77	DS0107/5000	B924112
	420	230	370	370	200	160	11	48	97	DS0107/6300	B924107
	420	245	370	370	215	175	11	51	107	DS0107/8000	B924628
	420	260	370	370	230	190	11	59	130	DS0107/10000	B924672
K series	300	–	310	240	162	130	11	16	34	DS0107/2000K	B924687
	360	–	360	310	170	135	11	28	63	DS0107/3150K	B924688
	360	–	360	310	185	150	11	29	70	DS0107/4000K	B924689
	360	–	360	310	200	165	11	31	77	DS0107/5000K	B924690
	420	–	420	370	200	160	11	48	97	DS0107/6300K	B924691
	420	–	420	370	215	175	11	51	107	DS0107/8000K	B924692
	420	–	420	370	230	190	11	59	130	DS0107/10000K	B924693
LG series	330	195	265	298	–	200	7	16	34	DS0107/2000LG	B924695
	394	198	310	358	–	240	9	28	63	DS0107/3150LG	B924658
	394	214	310	358	–	240	9	29	70	DS0107/4000LG	B924659
	394	228	310	358	–	240	9	31	77	DS0107/5000LG	B924660
	452	212	360	408	–	280	12	48	97	DS0107/6300LG	B924661
	452	227	360	408	–	280	12	51	107	DS0107/8000LG	B924662
	452	250	360	408	–	280	12	59	130	DS0107/10000LG	B924679
SK2 series	410	190	400	380	330	125	11	16	49	DS0107/2000SK2	B924696
	520	190	450	490	390	135	11	28	75	DS0107/3150SK2	B924122
	520	190	450	490	390	135	11	29	80	DS0107/4000SK2	B924123
	520	200	450	490	390	150	11	31	86	DS0107/5000SK2	B924124
	520	200	500	490	450	150	11	48	107	DS0107/6300SK2	B924125
	520	215	500	490	450	175	11	51	130	DS0107/8000SK2	B924126
	520	230	500	490	450	175	11	59	155	DS0107/10000SK2	B924678

Ordering information enclosure

Dimensions (mm)									Suitable for the following device types	Weight (kg)	Type	Art. No.
A	B	C	D	E	F	G	H	I				
430	380	490	385	420	450	M10	ø 29	ø 21	DS0107/2000 bis DS0107/5000	16	ESDS0107-1	B924673
600	420	490	555	460	490	M10	ø 36	ø 16	DS0107/6300 bis DS0107/10000	23	ESDS0107-2	B924674

Nameplate

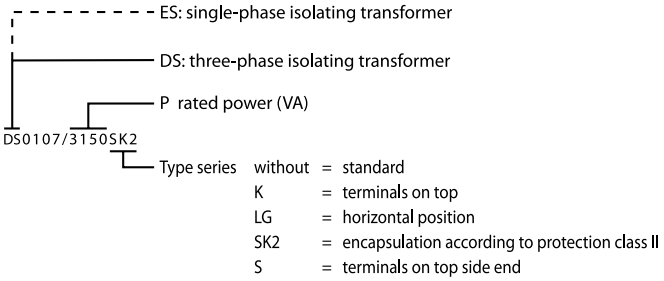

Wiring diagram

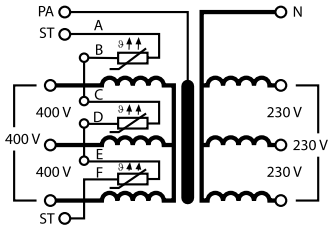

Terminal diagram

Standard,
K series,
LG series

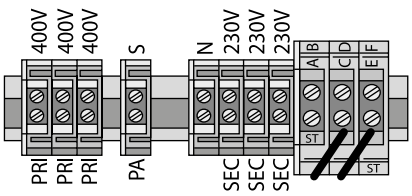

SK2 series,

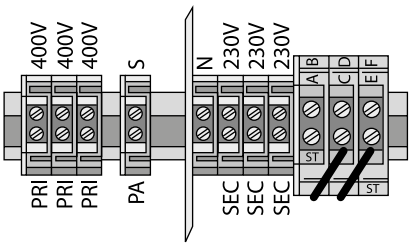

Connection properties

Type	Input terminals flexible/rigid	Screen winding flexible/rigid	Control terminals flexible/rigid	Output terminals flexible/rigid
DS0107/2000	10/16 mm²	10/16 mm²	2.5/4 mm²	10/16 mm²
DS0107/3150	10/16 mm²	10/16 mm²	2.5/4 mm²	10/16 mm²
DS0107/4000	10/16 mm²	10/16 mm²	2.5/4 mm²	10/16 mm²
DS0107/5000	10/16 mm²	10/16 mm²	2.5/4 mm²	10/16 mm²
DS0107/6300	10/16 mm²	10/16 mm²	2.5/4 mm²	16/25 mm²
DS0107/8000	10/16 mm²	10/16 mm²	2.5/4 mm²	16/25 mm²
DS0107/10000	16/25 mm²	16/25 mm²	2.5/4 mm²	16/25 mm²

ESL0107 transformers for operating theatre lights

Single-phase isolating transformers for the supply of operating theatre lights

Typical applications

- For the supply of operating theatre lights in group 2 medical locations

Approvals

CE UK CA

Device features

- Screen winding lead out for external connection
- Insulated mounting angles
- Degree of protection, IP00 (open design)
- Reinforced insulation
- Classification of insulation ta 40/E
- Connections: screw terminals
- Vector group: IiO

Standards

ESL0107 isolating transformers comply with the device standards and the regulations for installation:

- DIN EN 61558-1 (VDE 0570-1)
- IEC 61558-1
- DIN EN 61558-2-6 (VDE 0570-2-6)
- IEC 61558-2-6

Further information

For further information refer to our product range on www.bender.de.

Technical data

Type	ESL0107/120	ESL0107/160	ESL0107/280	ESL0107/400	ESL0107/630	ESL0107/1000
Insulation classification	t_a 40/E	t_a 40/E	t_a 40/E	t_a 40/E	t_a 40/E	t_a 40/E
Degree of protection/protection class	IP00/I	IP00/I	IP00/I	IP00/I	IP00/I	IP00/I
Power/voltages/currents						
Rated power	120 VA	160 VA	280 VA	400 VA	630 VA	1000 VA
Rated frequency	50…60 Hz	50…60 Hz	50…60 Hz	50…60 Hz	50…60 Hz	50…60 Hz
Rated input voltage	230 V	230 V	230 V	230 V	230 V	230 V
Rated input current	0.6 A	0.8 A	1.4 A	1.9 A	3 A	4.6 A
Rated output voltage	23…28 V	23…28 V	23…28 V	23…28 V	23…28 V	23…28 V
Rated output current	4.3 A	5.7 A	10 A	14.3 A	22.5 A	35.7 A
Inrush current I_E	< 15 x $\hat{I}_n$	< 15 x $\hat{I}_n$	< 15 x $\hat{I}_n$	< 15 x $\hat{I}_n$	< 15 x $\hat{I}_n$	< 15 x $\hat{I}_n$
Leakage current	≤ 5 µA	≤ 5 µA	≤ 5 µA	≤ 5 µA	≤ 5 µA	≤ 5 µA
No-load input current i_0	≤ 95 mA	≤ 120 mA	≤ 140 mA	≤ 237 mA	≤ 270 mA	≤ 320 mA
No-load output voltage u_0	≤ 31.7 V	≤ 30.7 V	≤ 30.6 V	≤ 29.7 V	≤ 30 V	≤ 30 V
Short-circuit voltage u_k	≤ 11 %	≤ 8.8 %	≤ 7.9 %	≤ 5.3 %	≤ 5 %	≤ 4.3 %
Environmental conditions						
Ambient temperature	40 °C	40 °C	40 °C	40 °C	40 °C	40 °C
No-load temperature rise	≤ 17 °C	≤ 20 °C	≤ 18 °C	≤ 26 °C	≤ 23 °C	≤ 26 °C
No-load temperature rise	≤ 66 °C	≤ 64 °C	≤ 71 °C	≤ 62 °C	≤ 64 °C	≤ 65 °C
Noise level (no load and full load)	≤ 35 dB(A)	≤ 35 dB(A)	≤ 35 dB(A)	≤ 35 dB(A)	≤ 35 dB(A)	≤ 35 dB(A)
Other						
Recommended fuse when used in accordance with DIN VDE 0100-710	6 A gL/gG	6 A gL/gG	6 A gL/gG	10 A gL/gG	16 A gL/gG	16 A gL/gG
Induction	1.23 T	1.17 T	1.14 T	1.14 T	1.06 T	1 T
$R_{primary}$	15.3 Ω	8.9 Ω	4.7 Ω	2 Ω	1.2 Ω	0.6 Ω
$R_{secondary}$	0.32 Ω	0.2 Ω	0.095 Ω	0.05 Ω	0.028 Ω	0.016 Ω
FE loss (iron loss)	5.5 W	6.3 W	9 W	15 W	18 W	26 W
Cu loss (copper loss)	15.8 W	16 W	25 W	23 W	33 W	44 W
Efficiency	85 %	88 %	89 %	91 %	92 %	94 %
Documentation number: D00110						

Dimension diagram

Isolating transformer

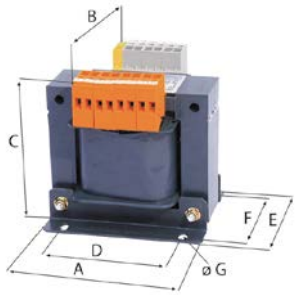

Isolating transformer enclosure

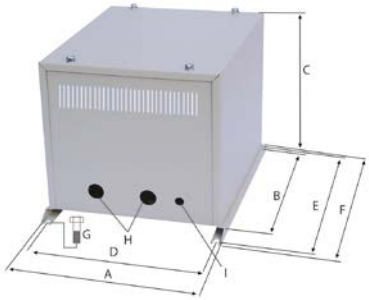

Ordering information

Dimensions (mm)							Cu weight (kg)	Weight (kg)	Type	Art. No.
A	B	C	D	E	F	G				
96	96	105	84	82	65	5.5	0.5	2.3	ESL0107/120	B924632
96	106	105	84	92	75	5.5	0.8	2.8	ESL0107/160	B924633
120	102	125	90	92	74	5.5	1	4	ESL0107/280	B924634
120	134	125	90	128	110	5.5	1.6	6.7	ESL0107/400	B924637
150	135	150	122	130	108	6.5	3	10.2	ESL0107/630	B924638
174	145	175	135	150	120	6.5	5.8	16.5	ESL0107/1000	B924639

Ordering information enclosure

Dimensions (mm)									Weight (kg)	Type	Art. No.
A	B	C	D	E	F	G	H	I			
240	280	220	220	300	320	M6	ø 29	ø 21	3.5	ESL0107-0	B924204

Terminal diagram

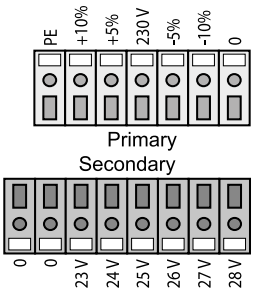

Connection properties

Type	Input terminals flexible/rigid	Screen winding flexible/rigid	Output terminals flexible/rigid
ESL0107/120	4/6 mm²	4/6 mm²	4/6 mm²
ESL0107/160	4/6 mm²	4/6 mm²	4/6 mm²
ESL0107/280	4/6 mm²	4/6 mm²	4/6 mm²
ESL0107/400	4/6 mm²	4/6 mm²	4/6 mm²
ESL0107/630	10/16 mm²	4/6 mm²	10/16 mm²
ESL0107/1000	10/16 mm²	4/6 mm²	10/16 mm²

Wiring diagram

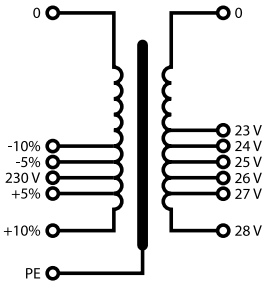

STEP-PS

For supply of Bender devices with a supply voltage of DC 24 V

Device features

- Easy DIN rail and wall mounting
- Maximum energy efficiency thanks to low idling losses
- Fast commissioning with LED function monitoring
- High operational reliability thanks to long power failure buffering under full load and high MTBF (> 500,000 h)
- Can be used worldwide in all industrial sectors due to a wide-range input and an international approval package
- Wide temperature range from -25 °C to +70 °C
- Can be connected in parallel to increase power

Typical applications

- For supply of Bender devices with a supply voltage of DC 24 V
- The compact design makes them especially suitable for installation distributors and flat control panels

Further information

For further information refer to our product range on www.bender.de.

Approvals

Ordering information

Type	Rated input voltage U_{IN}	Rated voltage	Art. No.
STEP-PS/1 AC/24 DC/0.5	AC 85 . . . 264 V, 45 . . . 65 Hz DC 95 . . . 250 V	DC 24 V	B94053110
STEP-PS/1 AC/24 DC/1.75			B94053111
STEP-PS/1 AC/24 DC/4.2			B94053112

Input data

Nominal input voltage range	AC 100…240 V
AC input voltage range	AC 85…264 V
DC input voltage range	DC 95 V…250 V
AC frequency range	45…65 Hz
DC frequency range	0 Hz

STEP-PS/1AC/24DC/0.5 (12 W)

Current consumption	approx. 0.28 A (AC 120 V) approx. 0.13 A (AC 230 V)
Inrush current limitation	< 15 A (typical)
I^2t	< 0.1 A^2s
Power failure buffering	> 15 ms (AC 120 V) > 90 ms (AC 230 V)
Typical turn-on time	< 0.5 s
Input fuse, integrated	1.25 A (slow acting, internal)

STEP-PS/1AC/24DC/1.75 (40 W)

Current consumption	approx. 0.6 A (AC 120 V) approx. 0.3 A (AC 230 V)
Inrush current limitation	< 15 A (typical)
I^2t	< 0.6 A^2s
Power failure buffering	> 25 ms (AC 120 V) > 150 ms (AC 230 V)
Typical turn-on time	< 0.5 s
Input fuse, integrated	3.15 A (slow acting, internal)
Recommended back-up fuse for line protection	6 A 10 A 16 A (characteristic B)

STEP-PS/1AC/24DC/4.2 (100 W)

Current consumption	approx. 1.3 A (AC 120 V) approx. 0.8 A (AC 230 V)
Inrush current limitation	< 15 A (typical)
I^2t	< 1 A^2s
Power failure buffering	> 20 ms (AC 120 V) > 100 ms (AC 230 V)
Typical turn-on time	< 0.5 s
Input fuse, integrated	4 A (slow acting, internal)
Recommended back-up fuse for line protection	6 A 10 A 16 A (characteristic B)

Output data

Nominal output voltage	DC 24 V ±1 %

STEP-PS/1AC/24DC/0.5 (12 W)

Output current	0.5 A (-25…+55 °C) 0.55 A (-25…40 °C permanent) 1 A (maximum output current)
Control deviation	< 1 % (change in load, static 10…90 %) < 2 % (change in load, dynamic 10…90 %) < 0.1 % (change in input voltage ±10 %)
Efficiency	> 84 % (for AC 230 V and nominal values)
Residual ripple	< 20 mV_{SS} (20 MHz)
Peak switching voltages	< 30 mV_{SS} (20 MHz)
Connection in parallel	yes, for increased power
Connection in series	yes
Protection against internal overvoltages	yes, limited to approx. DC 35 V
Resistance to reverse feed	≤ DC 35 V

STEP-PS/1AC/24DC/1.75 (40 W)

Setting range of the output voltage	DC 22.5 V…29.5 V (> 24 V constant power)
Output current	1.75 A (-25…70 °C) 1.9 A (-25…40 °C permanent) 3.75 A (maximum output current)
Derating	above +55 °C: 2.5 % per kelvin
Control deviation	< 1 % (change in load, static 10…90 %) < 2 % (change in load, dynamic 10…90 %) < 0.1 % (change in input voltage ±10 %)
Maximum power loss nominal load	5 W
Maximum power dissipation idling	0.7 W
Efficiency	> 89 % (for AC 230 V and nominal values)
Ascent time	< 0.5 s (U_{OUT} (10…90 %))
Residual ripple	< 35 mV_{SS} (with nominal values)
Switching transients	< 35 mV_{SS} (with nominal values)
Connection in parallel	yes, for increased power
Connection in series	yes
Overvoltage protection against internal overvoltages	yes, limited to approx. DC 35 V
Resistance to reverse feed	max. DC 35 V

STEP-PS/1AC/24DC/4.2 (100 W)

Setting range of the output voltage	DC 22.5…29.5 V (> 24 V constant power)
Output current	4.2 A (-25…70 °C) 4.4 A (-25… 40 °C permanent) 6.5 A (maximum output current)
Derating	above +55 °C: 2.5 % per kelvin
Control deviation	< 1 % (change in load, static 10…90 %) < 2 % (change in load, dynamic 10…90 %) < 0.1 % (change in input voltage ±10 %)
Maximum power loss nominal load	13.2 W
Maximum power dissipation idling	0.7 W
Efficiency	> 88 % (for AC 230 V and nominal values)
Ascent time	< 0.5 s (U_{OUT} (10…90 %))
Residual ripple	< 25 mV_{SS} (with nominal values)
Peak switching voltages	< 25 mV_{SS} (with nominal values)
Connection in parallel	yes, for increased power
Connection in series	yes
Overvoltage protection against internal overvoltages	yes, limited to approx. DC 35 V
Resistance to reverse feed	max. DC 35 V

Power consumption

STEP-PS/1AC/24DC/0.5 (12 W)

Maximum power dissipation idling	< 0.3 W
Maximum power loss nominal load	< 2.2 W

STEP-PS/1AC/24DC/1.75 (40 W)

Maximum power dissipation idling	5 W
Maximum power loss nominal load	0.7 W

STEP-PS/1AC/24DC/4.2 (100 W)

Maximum power dissipation idling	13.2 W
Maximum power loss nominal load	0.7 W

LED status indicator

Status display	"DC OK" LED green/U_{OUT} > 21.5 V: LED lights up < 21.5 V: LED off

Environmental conditions

Ambient temperature (operation)	-25…70 °C (> 55 °C derating)
Ambient temperature (storage/transport)	-40…85 °C
Max. perm. humidity (operation)	≤ 95 % (at 25 °C, no condensation)
Vibration (operation)	< 15 Hz, amplitude ±2.5 mm acc. to IEC 60068-2-6 15…150 Hz, 2.3 g, 90 min.
Shock	30 g in all directions, acc. to IEC 60068-2-27
Pollution degree acc. to EN 50178	2
Classification of climatic conditions	3K22 (acc. to EN 60721)

Connection

Connection type	screw connection
Connection properties	
Rigid/flexible	0.2 … 2.5 mm^2
Conductor sizes	AWG 24-12
Tightening torque	0.6 … 0.8 Nm
Stripping length	6.5 mm

Other

Insulation voltage input/output	AC 4 kV (type test) AC 2 kV (routine test)
Insulation voltage input/PE	AC 3.5 kV (type test) AC 2 kV (routine test)
Insulation voltage output/PE	DC 500 V ((routine test)
Degree of protection	IP20
Protection class	II
MTBF (IEC 61709)	500000 h
Enclosure material	polycarbonate
Foot latch material	plastic POM
Dimensions W/H/D (state of delivery)	
STEP-PS/1AC/24DC/0.5 (12 W)	18/90/61 mm
STEP-PS/1AC/24DC/1.75 (40 W)	54/90/61 mm
STEP-PS/1AC/24DC/4.2 (100 W)	90/90/61 mm
Weight	
STEP-PS/1AC/24DC/0.5 (12 W)	100 g
STEP-PS/1AC/24DC/1.75 (40 W)	200 g
STEP-PS/1AC/24DC/4.2 (100 W)	400 g

Technische Daten (Fortsetzung)

Standards	
Electrical equipment of machines	EN 60204
Safety isolating transformers for switch mode power supplies	IEC 61558-2-17
Electrical safety (of information technology equipment)	IEC 60950-1/VDE 0805 (SELV)
Electronic equipment for use in power installations	EN 50178/VDE 0160 (PELV)
Protective extra-low voltage	IEC 60950-1 (SELV) and EN 60204 (PELV)
Protective separation	DIN VDE 0100-410 DIN VDE 0106-1010
Protection against electric shock	DIN 57100-410
Protection against electric shock, basic requirements for protective separation in electrical equipment	DIN VDE 0106-101
Limits for harmonic current emissions	EN 61000-3-2
STEP-PS/1AC/24DC/1.75 (40W) and STEP-PS/1AC/24DC/4.2 (100 W)	
Certificate	CB Scheme

Approvals and certifications	
STEP-PS/1AC/24DC/0.5 (12W)	
UL approvals	UL/C-UL Listed UL 508 UL/C-UL Recognized UL 60950 NEC Class 2 as per UL 1310 UL/C-UL Listed ANSI/ISA-12.12.01 Class I, Division 2, Groups A, B, C, D
STEP-PS/1AC/24DC/1.75 (40W)	
UL approvals	UL/C-UL Listed UL 508 UL/C-UL Recognized UL 60950 NEC Class 2 as per UL 1310
Shipbuilding sector	Germanischer Lloyd
STEP-PS/1AC/24DC/4.2 (100W)	
UL approvals	UL/C-UL Listed UL 508 UL/C-UL Recognized UL 60950
Shipbuilding sector	Germanischer Lloyd

Dimension diagram (dimensions in mm)

STEP-PS/1AC/24DC/0.5 (12 W)

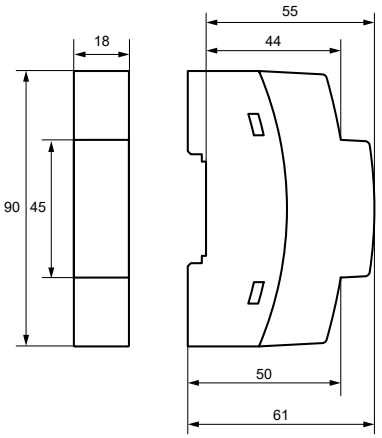

STEP-PS/1AC/24DC/1.75 (40 W)

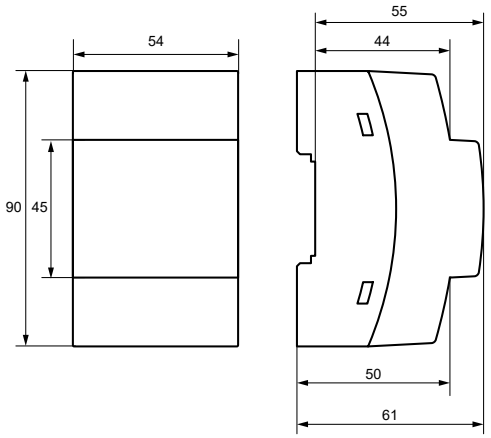

STEP-PS/1AC/24DC/4.2 (100 W)

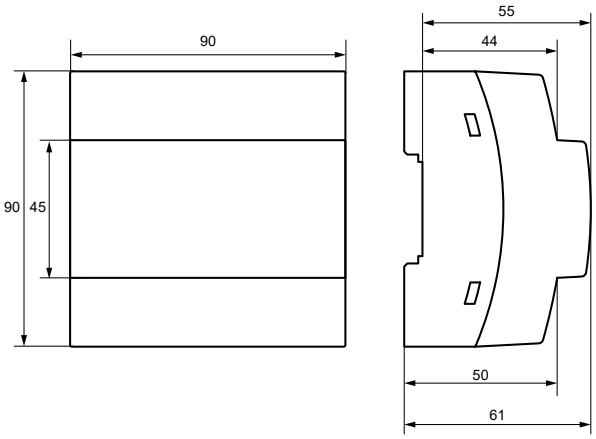

Connection to different systems

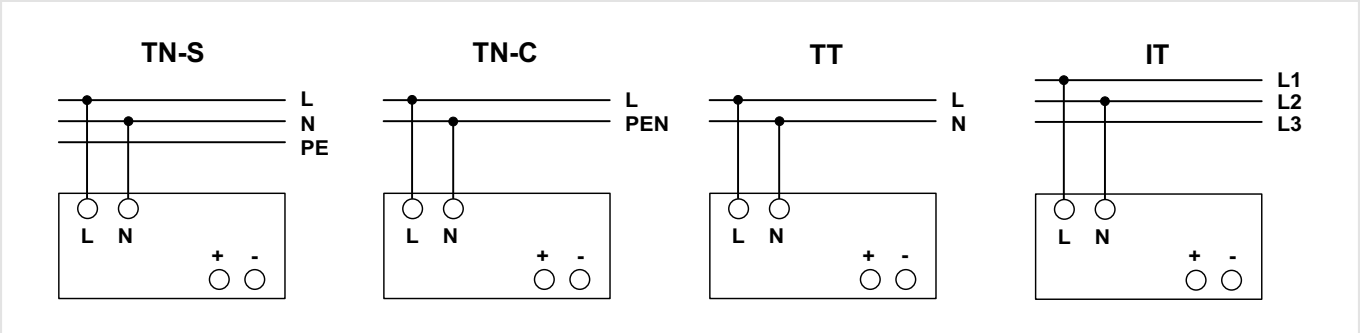

AN410

Power supply unit for DC 24 V supply

Typical applications

- To supply Bender devices with DC 24 V and maximum 10 VA power consumption

Approvals

*) Approval relating to the rated input voltage U_{IN}

Device features

- Primary-pulsed power supply unit for the power supply of Bender devices with a supply voltage of DC 24 V and a power consumption of max. 10 VA
- Power supply for max. 3 MK2430 alarm indicator and test combinations
- Protected against idle running, overload and continuous short circuits

Standards

The AN410 series complies with the requirements of the device standard:

- EN 61204

Further information

For further information refer to our product range on www.bender.de.

Ordering information

Type	ABB type	Rated input voltage U_{IN}	Rated output voltage	Art. No.
AN410	CP-D 24/0.42/Art. No. 1SVR 427 041 R0000	AC 90…264 V, 47…63 Hz / DC 120…370 V	DC 24 V	B924209
AN420-R	CP-D RU/Art. No. 1SVR 427 049 R0000	DC 9…35 V	DC 9…35 V	B95100250

Technical data

Insulation coordination acc. to IEC 60664-1

Rated impulse voltage/pollution degree	3 kV/2
Rated insulation voltage U_i input circuit/output circuit	3 kV

Input circuits

Rated input voltage U_{IN}		see ordering information
Power consumption		≤ 3 W
Inrush current		≤ 30 A, ≤ 3 ms
Stored energy time in the event of power system failure		≥ 30 ms
Typical current/power consumption	at AC 110 V	184 mA/11.62 W
	at AC 230 V	120.6 mA/12 W
Primary fuse (internal device protection, not accessible)		1 A time-lag/AC 250 V

Output circuit

Rated output voltage	DC 24 V (±1 %)
Rated output current	420 mA
Derating of the output current 60 °C < T_U ≤ 70 °C	2.5 %/K
Parallel connection option	with redundance unit AN420-R
Protection against short circuits/no-load	continuous protection against short circuits/no-load

Environment/EMC

EMC immunity	acc. to EN 61000-6-2
EMC emission	acc. to EN 61000-6-3
Ambient temperature (during operation/during storage)	-25…+70 °C/-25…+85 °C
Classification of mechanical conditions acc. to IEC/EN 60068-2	

Connection

Connection	screw-type terminals
Connection	
rigid, flexible (with or without ferrule)/conductor sizes	0.2…2 mm² (AWG 24-14)
Stripping length	6 mm (0.24 inches)
Tightening torque	0.36…0.56 Nm

Standards, approvals and certifications

	UL 508, CAN/CSA C22.2 No. 14*)
	UL 1310, CAN/CSA C22.2 No. 223 (Class 2 Power Supply) *)
	UL 6090, CAN/CSA C22.2 No. 60950 *)
	CCC *)

Mark

CE	CE

Other

Status indicators	2 LEDs: output voltage present, output votlage low
Operating mode	continuous operation
Mounting	vertically (terminals +/– at the top)
Degree of protection, internal components DIN EN 60529 (VDE 0470-1)	IP30
Degree of protection, terminals (DIN EN 60529 (VDE 0470-1))	IP20
Protection class	II
Minimum distance to adjacent devices vertically/horizontally	25/25 mm
Enclosure dimensions (W x H x D)	18 x 91 x 57.5 mm (0.71 x 3.58 x 2.26 inches)
DIN rail mounting acc. to	IEC 60715
Protective extra low voltage	SELV (EN 60950-1)
Documentation number	D00099
Weight	≤ 70 g

*) Approval relating to the rated input voltage U_{IN}

Wiring diagram

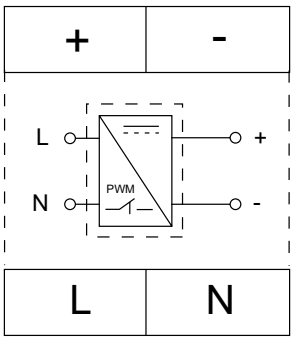

L, N: input voltage

+, -: output voltage

Option for redundant power supply

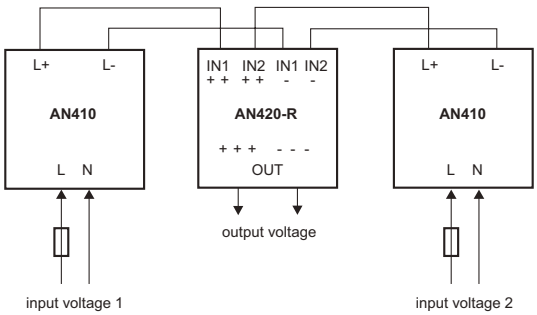

AN450

Power supply unit

Typical applications

- Supply of Bender devices with AC 20 V and a power consumption of maximum 9 VA

Approvals

Device features

- Power supply unit for the supply of Bender devices with AC 20 V and a power consumption of maximum 9 VA
- Supply of 3 MK2430 alarm indicator and test combinations (for example)
- Protected secondary circuit

Standards

The AN450 series complies with the requirements of the device standards:

- DIN EN 61558-1 (VDE 0570-1)
- IEC 61558-1

Further information

For further information refer to our product range on www.bender.de.

Ordering information

Type	Output voltage	Supply voltage U_s	Art. No.
AN450	AC 20 V, 50…60 Hz	AC 230 V, 50…60 Hz	B924201
AN450-133		AC 127 V, 50…60 Hz	B924203

Technical data

Insulation coordination acc. to IEC 60664-1

Rated voltage	AC 250 V
Overvoltage category/pollution degree	III/2
Rated impulse voltage	4 kV
Altitude	≤ 2000 m NN

Voltage ranges

Nominal voltage	see ordering details
Frequency range	see ordering details
Operating range of rated voltage	0.85…1.1
Output voltage	AC 20 V, 50…60 Hz
Rated output Power	≤ 9 VA
Internal secondary protection	PTC resistor

Enviroment/EMC

EMC immunity	acc. to EN 61000-6-2
EMC emission	acc. to EN 61000-6-4

Classification of climatic conditions acc. to IEC 60721

Stationary use	3K22
Transport	2K11
Storage	1K21
Operating temperature	- 10…+ 55 °C

Classification of mechanical conditions acc. to IEC 60721

Stationary use	3M11
Transport	2M4
Storage	1M12

Connection

Connection	screw terminals
Connection properties:	
rigid/flexible/Conductor sizes	0.2…4/0.2…2.5 mm²/AWG 24-12
Connection, flexible with connector sleeve	0.25…2 mm²
Stripping length	8 mm
Tightening torque, terminal screws	0.5 Nm

Other

Operating mode	continuous operation
Mounting	any position
Protection class internal components/terminals (DIN EN 60529)	IP30/IP20
Screw fixing	2 x M4
DIN rail mounting acc. to	DIN EN 60715/IEC 60715
Flammability class	UL94V-0
Standards	IEC 61558-2-6
Weight	≤ 400 g

Dimension diagram (dimensions in mm)

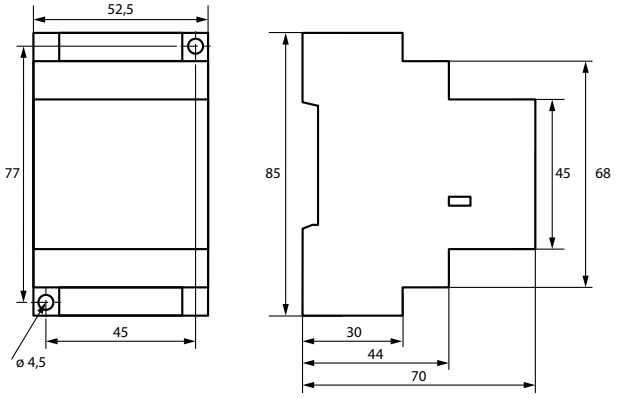

Wiring diagram

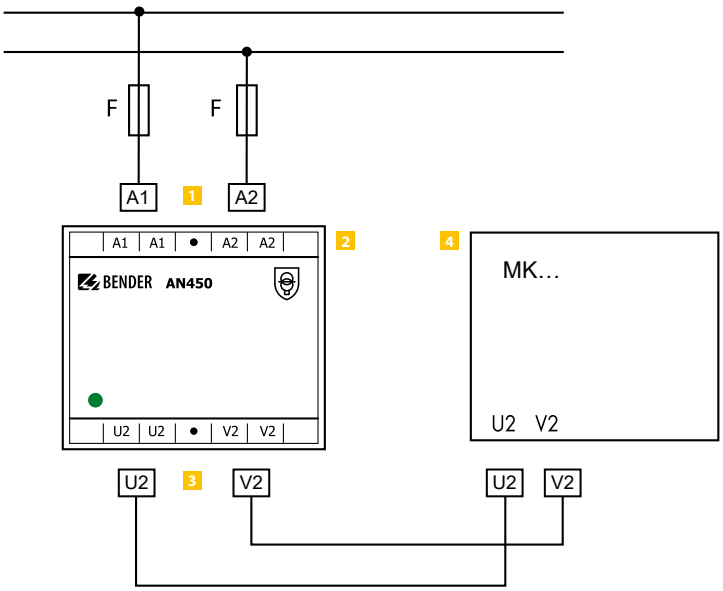

1	**A1, A2** supply voltage U_S; F = short circuit protection	3	**U2, V2** output voltage
2	Power supply unit AN450	4	Alarm indicator and test combination

7204/7220/9604/9620

Measuring instruments

Measuring instruments 9604/7204/9620

Device features

- Dimensions: 72 x 72 mm (7204/7220) or 96 x 96 mm (9604/9620)
- Version S for increased shock and vibration resistance
- Scale background: white, imprint: black

Further information

For further information refer to our product range on www.bender.de.

Typical applications

- The analogue measuring instruments of the 96…/72… series for indication of measured values from Bender devices utilising an appropriate output

Approvals

CE EAC

Ordering information

Type	Scale centre point (SKMP)	Dimensions	Input current	Suitable ISOMETER®	Art. No.
7204-1421	120 kΩ	72 x 72 mm	0…400 µA	iso685…	B986763
7204S-1421					B986804
9604-1421	120 kΩ	96 x 96 mm			B986764
9604S-1421					B986784
9620-1421	120 kΩ	96 x 96 mm	0…20 mA		B986841
9620S-1421					B986842
9604-1621	1,2 MΩ	96 x 96 mm	0…400 µA		B986782
7220-1421	120 kΩ	72 x 72 mm	0…20 mA		B986844
7220S-1421					B986848

Technical data

Test voltage	3 kV
Accuracy class acc. to DIN 43780	1.5
Normal position	vertical +5°
Temperature range	-25…+40 °C

Protection class acc. to DIN 40050	
Enclosure	IP52
Terminals	IP00
Terminals with contact protection	
Documentation number	D00092

Dimension diagram (dimensions in mm)

7204/7220

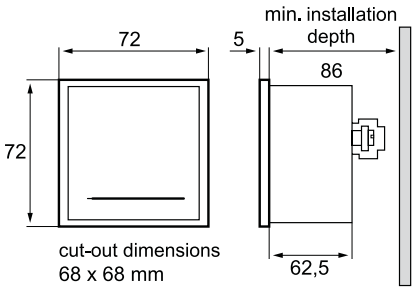

9604/9620

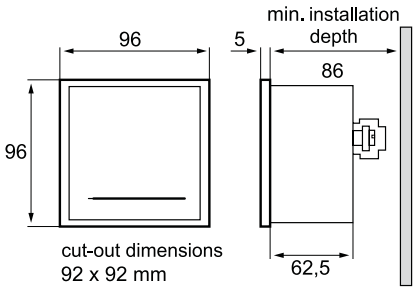

DI-1DL

RS-485 interface repeater for RS-485 bus extension

Device features

- Plastic enclosure for DIN rail mounting
- Dynamic baud rate setting
- Galvanic separation between the input and output circuit and the power supply – overvoltage protection
- Supply voltage AC 85…260 V, 50…60 Hz
- Automatic baud rate changeover – can therefore be used for the internal BMS bus without limitations

Typical applications

- Extension of the maximum possible bus length by 1200 m in BMS systems (EDS, RCMS, MEDICS® systems)
- Extension of the maximum possible bus nodes by 31*
- Protection against spikes by galvanic separation between the input and output circuit and the power supply
- Implementation of resonant stubs (refer also to BSM instruction leaflet)

Approvals

CE

Further information

For further information refer to our product range on www.bender.de.

Ordering information

Type	Supply voltage U_s	Art. No.
DI-1DL	AC 85…260 V, 50…60 Hz	B95012047

Technical data

Supply voltage

Supply voltage U_s	AC 85…260 V, 50…60 Hz
Power consumption	0.1 A/7 W

Interfaces

BMS

Interface/protocol	2 x RS-485/BMS
Baud rate	dynamic
Cable length	≤ 1200 m
Cable (twisted in pairs, one end of shield connected to PE)	recommended: J-Y(St)Y min. 2x0.8
Data direction switching	automatic
Cascading option	yes
Number of bus devices:	31 additional bus devices per repeater, cascading allows a virtually unrestricted number of connections
Terminating resistor and bus bias voltage can be activated by a switch	
Device address, BMS bus	–
Alarm LEDs	activity indication: direction and faults (green) internal operating voltage (red)

Environment

Operating temperature	0…+70 °C

Connection

Connection	push-wire/plug-in terminals

Other

Operating mode	continuous operation
Mounting	any position
Enclosure	for standard DIN rail 32 mm (approx.110 x 75 x 55)
Operating manual	DiaLog RS-485 repeater type CN-2-1
Documentation number	D00125
Weight	approx. 90 g

Dimension diagram (dimensions in mm)

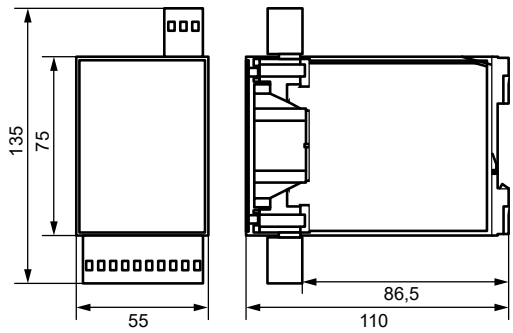

* depending on used transceivers

Wiring diagram

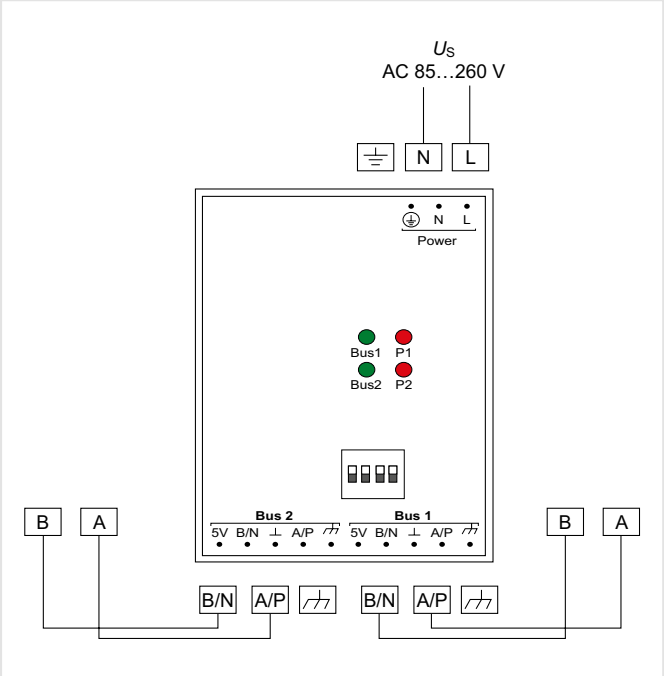

Settings

a) When used in the BMS bus, the rotary switch is to be set to position 4 for baud rate/interference suppression. The rotary switch is located at the bottom of the device.

b) Two DIP switches are available per bus segment to terminate the bus and to generate the required bias voltage. Both DIP switches must be switched on for activation.

The termination is carried out as shown in the following example of a BMS bus system:

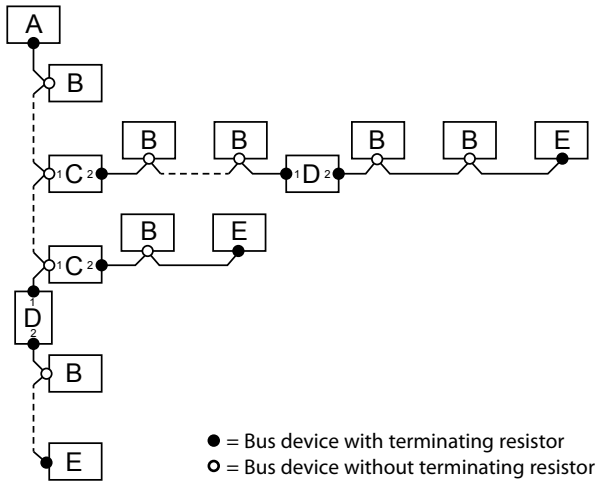

Termination/bias voltage		
A	Master	Terminating resistor activated via switch on device (ON)* or external terminating resistor between terminals A and B
B	Slave	Terminating resistor deactivated via switch on device (OFF)*
C	RS-485 interface repeater DI-1DL	Bus 1: Terminating resistor and bias voltage generation deactivated via switch on device (DIP switch 1, 2: OFF)
		Bus 2: Terminating resistor and bias voltage generation activated via switch on device (DIP switch 3, 4: ON)
D	RS-485 interface repeater DI-1DL	Bus 1: Terminating resistor and bias voltage generation deactivated via switch on device (DIP switch 1, 2: OFF), external terminating resistor between terminals A/P and B/N
		Bus 2: Terminating resistor and bias voltage generation activated via switch on device (DIP switch 3, 4: ON)*
E	Slave	Terminating resistor activated via switch on device (ON) or external terminating resistor between terminals A and B

* The bias voltage generation is generally activated for the BMS bus master (via software) and deactivated for the BMS slaves.

DI-2USB

Interface converter USB to RS-485

Device features

- Plastic enclosure
- Galvanic separation between the input and output circuit
- Power supply via USB port
- USB cable and driver CD included in the scope of delivery

Approvals

CE

Typical applications

- Conversion of USB interface into RS-485 interface
- Parameterisation of alarm indicator and operator panels (MK2430) via RS-485 interface by means of software
- Parameterisation of Modbus RTU devices via RS-485 interface by means of software

Further information

For further information refer to our product range on www.bender.de.

Ordering information

Type	Supply voltage	Art. No.
DI-2USB	from USB port, no additonal power supply required	B95012045

Technical data

Insulation coordination acc. to IEC 60664-1

Rated voltage	
Rated impulse voltage/pollution degree	3 kV/3

Supply voltage

Supply voltage U_S	see ordering details
Power consumption	95 mVA

Interfaces

RS-485

Interface/protocol	1 x RS-485/–
Baud rate	9.6…115.2 kbit/s
Cable length	≤ 1200 m
Cable (twisted in pairs, one end of shield connected to PE)	recommended: J-Y(St)Y min. 2x0.8
Mode	–
Connection	A, B
Integrated terminating resistors, selectable via jumper, factory setting	terminating resistors included
Device address	–

USB

Serial interface	1 x USB
Alarm LEDs	ON (yellow), R x Data (green), T x Data (red)

Environment/EMC

EMC immunity/EMC emission	EN 61000-6-2/EN 61000-6-4
Operating temperature	-10…+55 °C

Classification of climatic conditions acc. to IEC 60721

Stationary use	3K22
Transport	2K11
Long-term storage	1K22

Classification of mechanical conditions acc. to IEC 60721

Stationary use	3M11
Transport	2M4
Long-term storage	1M12

Connection

Connection	screw-type terminals/USB plug type B
Connection properties rigid/flexible/conductor sizes	0.5…2.5 mm² (AWG 22-12)

Other

Operating mode	continuous operation
Mounting	any position
Screw mounting	2 x M3
DIN rail mounting acc. to	IEC 60715
Operating manual	manual of third-party manufacturer
Documentation number	D00103
Weight	≤ 25 g

Dimension diagram (dimensions in mm)

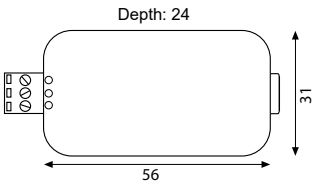

Wiring diagram

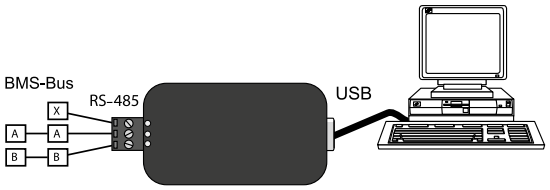

DI-2USB to connect a personal computer utilising a USB interface to a BMS network.

Note: Consider BMS bus termination

IOM441-S / IOM441W-S

Relay module

DC

Device features

- Extension of Bender devices by 12 relays
- N/O and N/C selectable

Further information

For further information refer to our product range on www.bender.de.

Typical applications

- Extension of the measuring channels during insulation fault location by potential-free contacts

Approvals

Ordering information

Type	Supply voltage U_s	Option "W"	Art. No.
IOM441-S	DC 24 V	–	B95012057
IOM441W-S		✓	B95012057W

Accessories

Description	Art. No.
Plug kit screw terminals [1]	B95012901
Plug kit Push-wire terminals	B95012902
Mechanical accessoires [1] (terminal cover + 2 mounting clips)	B95012903
BB bus 4TE Connector [1] (Requires matching PCB on base unit)	B98110002

[1] Within scope of delivery

Technical data

Insulation coordination according to IEC 60664-1

Definitions:

Supply circuit	BB bus
Output circuits	relay contacts [(13, 14), (23, 24), (33, 34), (43, 44), (53, 54), (63, 64), (73, 74), (83,84), (93, 94), (103, 104), (113, 114), (123, 124)]
Protective separation (reinforced insulation) between	(BB bus) – (relay contacts)
Rated voltage	250 V
Overvoltage category	III
Pollution degree	2
Rated impulse voltage	6 kV
Voltage test (routine test) acc. to IEC 61010-1	AC 3.51 kV
Basic insulation between	(relay contact) – (relay contact)
Rated voltage	250 V
Overvoltage category	III
Pollution degree	2
Rated impulse voltage	4 kV
Voltage test (routine test) acc. to IEC 61010-1	AC 2.21 kV

Supply voltage

Supply voltage U_s	DC 24 V
Tolerance of U_s	5 %
Power consumption	< 1.7 W

LEDs

ON (operation LED)	green

Switching elements

Number	12 N/O contacts
Rated operational voltage	AC 250 V/DC 30 V
Rated operational current	5 A
Minimum contact rating	1 mA at ≥ DC 5 V

Environment/EMC

EMC	IEC 61326-2-4

Ambient temperatures:

Operating temperature	-25…+55 °C
Transport	-40…+85 °C
Storage	-25…+70 °C

Classification of climatic conditions acc. to IEC 60721:

Stationary use (IEC 60721-3-3)	3K22
Transport (IEC 60721-3-2)	2K11
Long-term storage (IEC 60721-3-1)	1K22

Classification of mechanical conditions acc. to IEC 60721:

Stationary use (IEC 60721-3-3)	3M11
Transport (IEC 60721-3-2)	2M4
Long-term storage (IEC 60721-3-1)	1M12
Area of application	≤ 2000 m AMSL

Technical data (continued)

Connection

Connection type	pluggable push-wire terminal
Conductor sizes	AWG 24-12
Stripping length	10 mm
rigid/flexible	0.2…2.5 mm²
flexible with ferrule, with/without plastic sleeve	0.25…2.5 mm²
Multiple conductor, flexible with TWIN ferrule with plastic sleeve	0.5…1.5 mm²

Other

Operating mode	continuous operation
Degree of protection internal components	IP40
Degree of protection terminals	IP20
DIN rail mounting acc. to	IEC 60715
Screw fixing	2 x M4 with mounting clip
Enclosure material	polycarbonate
Flammability class	UL 94V-0
Dimensions (W x H x D)	72 x 93 x 63
Documentation number	D00300
Weight	approx. 180 g

Device version "W"

Devices with the suffix "W" feature increased shock and vibration resistance.
The electronics is covered with a special varnish to provide increased protection against mechanical stress and moisture.

Ambient temperatures:

Operating temperature	-40…+70 °C
Transport	-40…+85 °C
Long-term storage	-25…+70 °C

Classification of climatic conditions acc. to IEC 60721:

Stationary use (IEC 60721-3-3)	3K23

Classification of mechanical conditions acc. to IEC 60721:

Stationary use (IEC 60721-3-3)	3M12

( )* = Factory settings

Dimension diagram (dimensions in mm)

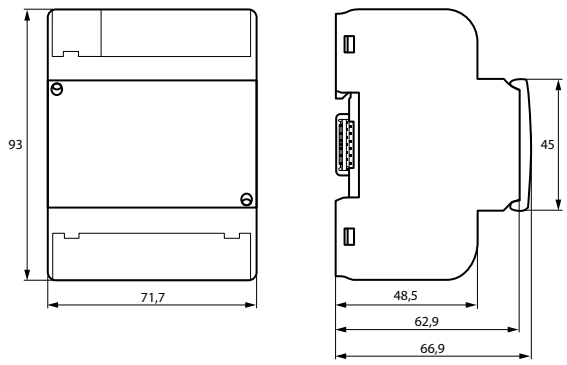

Wiring diagram

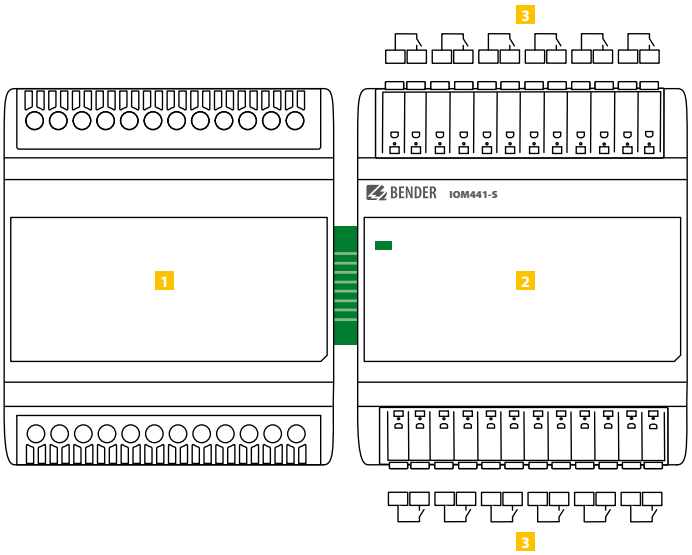

1 Basic device
2 IOM441-S
3 Relay outputs

Always connect the IOM441… only to the right of the basic device.

For UL applications:
Use 60/75 °C copper lines only!

COMTRAXX® COM465IP

Condition Monitor with integrated gateway for the connection of Bender devices to Ethernet TCP/IP networks

Typical applications

- Optimum display and visualisation of device and system states in the web browser
- Monitoring and analysis of compatible Bender products and third-party devices
- Specific system overview through individual system description
- Selective notification to various users in the event of alarms
- Numerous interfaces for data transfer to higher-level systems
- Clear setting of device parameters. Storing, documenting and restoring parameters is possible
- Commissioning and diagnosis of Bender systems
- Remote diagnosis, remote maintenance

Data transfer interfaces

Approvals

Device features

- Condition monitor for Bender systems
- Integrated modular gateway between Bender systems and TCP/IP enables remote access via LAN, WAN or Internet
- Range of functions adjustable through function modules
- Ethernet (10/100 MBit/s) for remote access via LAN, WAN or Internet
- Support of devices that are connected to the internal or external BMS bus, via BCOM, via Modbus RTU or Modbus TCP
- Individual visualisation can be generated, which is displayed via the web browser

Range of functions (V4.5.0 and higher)

Basic device (without function modules)

- Condition monitor with web interface
- Interfaces for the integration of devices
  – Internal BMS bus (max. 150 devices) and external* BMS bus (max. 99 x 150 devices)
  – BCOM (max. 255 devices)
  – Modbus RTU and Modbus TCP (max. 247 devices each)
- Remote display of the latest measured values, status/alarm messages and parameters*
- Gateway to Modbus TCP: Reading the latest measured values, status/alarm messages from addresses 1…10 of each interface via Modbus TCP
- Gateway to Modbus RTU: Reading the latest measured values, status/alarm messages from addresses 1…10 of the internal BMS interface via Modbus RTU
- Ethernet interface with 10/100 MBit/s for remote access via LAN, WAN or Internet
- Setting of internal device parameters and parameters of devices connected via Modbus RTU and Modbus TCP **
- Time synchronisation for all assigned devices
- History memory (20,000 entries)
- Data loggers, freely configurable (30 x 10,000 entries)
- 50 data points from third-party devices (via Modbus RTU or Modbus TCP) can be integrated into the system
- A virtual device with 16 channels can be created

*) Indicating parameters of BMS bus devices is only possible when the gateway is connected to the internal BMS bus.

**) Parameters can be set via web application and externally (via BMS/ICOM/BCOM), but not via Modbus. The parameters of assigned devices can only be read; Function module C is necessary for modification of settings!

Function module A

- Assignment of individual texts for devices, channels (measuring points) and alarms.
- Device failure monitoring.
- E-mail notification to different users in case of alarms or system errors.
- Device documentation of any device in the system can be generated.*
  It contains all parameters and measured values belonging to the device, as well as device information such as serial number and software version.
- System documentation can be created. It documents all devices in the system at once.

*) Creating device documentation of BMS bus devices is only possible if the gateway is connected to the internal BMS bus.

Function module B

- Reading the latest measured values, status and alarms messages from all assigned devices. Uniform access to all assigned devices via Modbus TCP over integrated server.
- Reading the latest measured values, status and alarm messages from all assigned devices via internal BMS. Uniform access to all assigned devices via Modbus RTU.
- Control commands: From an external application (e.g. visualisation software or PLC), commands can be sent to BMS devices via Modbus TCP or Modbus RTU.
- Access to alarms and measured values via SNMP (V1, V2c or V3). SNMP traps are supported.
- Access via PROFINET to alarms and measured values.

Function module C

- Fast and easy parameter setting of all devices* assigned to the gateway via web browser.
- Device backups of all devices in the system can be created and restored.

*) Parameter setting of BMS bus devices is only possible when the gateway is connected to the internal BMS bus.

Function module D

Quick and easy-to-create visualisation of the system. Integrated editor provides access to a variety of widgets and functions.

- Display on up to 50 overview pages, where e.g. room plans can be stored. Navigation within these overview pages is possible.
- Access to all measured values that are available in the system.
- Buttons and sliders can be used to send BMS test and reset commands, as well as to control external devices via Modbus TCP.

Function module E

- 100 virtual devices with 16 channels each can be created.

Function module F

- 1,600 data points from third-party devices (via Modbus RTU or Modbus TCP) can be integrated into the system.

Examples:

- To write parameters via Modbus, function modules B and C are required.
- To read parameters via Modbus, function module B is required.
- Function modules A and D are required to be able to use a visualisation in combination with the individual texts.

Further information

For further information refer to our product range on www.bender.de.

Ordering information

Type	Supply voltage/frequency range U_S	Power consumption	Application	Art. No.
COM465IP-230V	AC/DC 24…240 V, 50…60 Hz	≤ 6.5 VA/≤ 4 W	Condition monitor with integrated gateway: Bender system/Ethernet	B95061065

Function modules

Application	Function module (software licence)	Art. No.
Individual text messages for all devices/ channels, device failure monitoring, e-mail in the event of an alarm, device documentation	Function module A	B75061011
Provision of data via via Modbus TCP, Modbus RTU, SNMP and PROFINET	Function module B	B75061012
Parameter setting of all integrated devices, device backups	Function module C	B75061013
Visualisation application	Function module D	B75061014
Virtual devices	Function module E	B75061015
Integration of third-party devices	Function module F	B75061016

Insulation coordination acc. to IEC 60664-1/IEC 60664-3

Rated voltage	AC 250 V
Rated impulse voltage/overvoltage category	4 kV/III
Pollution degree	3
Protective separation (reinforced insulation) between	(A1/+, A2/-) - [(AMB, BMB), (ABMS, BBMS), (X2), (X3, X4)]

Supply voltage

Supply voltage U_S	see ordering information
Frequency range U_S	see ordering information
Power consumption	see ordering information

Indications

LEDs:

ON	operation indicator
ETHERNET IP	data traffic Ethernet
MODBUS RTU	data traffic Modbus
BMS	data traffic BMS
Ethernet (terminal X2)	lights during network connection, flashes during data transfer

Memory

Individual texts (function module A only)	unlimited number of texts each with 100 characters
E-mail configuration and device failure monitoring	max. 250 entries
Number of data points for "third-party devices" to Modbus TCP and Modbus RTU	50
Number of data loggers	30
Number of data points per data logger	10,000
Number of history memory entries	20,000

Visualisation

Number of pages	50
Background image size	3 MB

Interfaces

Ethernet

Port	RJ45
Cable length	< 100 m
Data rate	10/100 MBit/s, autodetect
HTTP mode	HTTP/HTTPS (HTTP)*
DHCP	on/off (off)*
t_{off} (DHCP)	5…60 s (30 s)*
IP address	
nnn.nnn.nnn.nnn	(192.168.0.254)*
can always be reached via:	169.254.0.1
Net mask	nnn.nnn.nnn.nnn (255.255.0.0)*
Protocols (depending on function module selected)	TCP/IP, Modbus TCP, Modbus RTU, DHCP, SNMP, SMTP, NTP

BMS bus (internal/external)

Interface/protocol	RS-485/BMS internal or BMS external (BMS internal)*
Operating mode	master/slave (master)*
Baud rate BMS	internal 9.6 kBit/s external 19.2; 38.4; 57.6 kBit/s
Cable length	≤ 1,200 m
Cable	shielded, one end of shield connected to PE
recommended:	CAT6/CAT7 min. AWG23
alternative:	twisted pair, J-Y(St)Y min. 2x0,8
Connection	X1 (ABMS, BBMS)
Connection type	refer to connection "push-wire terminal X1"
Terminating resistor	120 Ω (0.25 W), can be connected internally
Device address, internal/external BMS bus	1…150 (1)*/2…99

BCOM

Interface/protocol	Ethernet/BCOM
BCOM system name	(SYSTEM)
BCOM subsystem address	1…255 (1)*
BCOM device address	0…255 (0)*

Modbus

Bender Modbus image	V1, V2 (V2)*

Modbus TCP

Interface/protocol	Ethernet/Modbus TCP
Operating mode	client for Bender Modbus TCP devices and "third-party devices"
Operating mode	server for access to the process image and for Modbus control commands
Parallel data access from different clients	max. 25

Modbus RTU

Interface/protocol	RS-485/Modbus RTU
Operating mode	master/slave (master)*
Baud rate	9.6…57.6 kBit/s
Cable length	≤ 1,200 m
Cable	shielded, one end of shield connected to PE
recommended:	CAT6/CAT7 min. AWG23
alternative:	twisted pair, J-Y(St)Y min. 2x0,8
Connection	X1 (AMB, BMB)
Connection type	refer to connection "push-wire terminal X1"
Terminating resistor	120 Ω (0.25 W), can be connected internally
Supported Modbus RTU slave addresses	2…247

PROFINET

Interface/protocol	Ethernet/PROFINET
Operating mode	Slave (IO-Device)

SNMP

Interface/protocol	Ethernet/SNMP
Versions	1, 2c, 3
Supported devices	queries to all devices (channels) possible
Trap support	yes

Used ports

53	DNS (UDP/TCP)
67, 68	DHCP (UDP)
80	HTTP (TCP)
123	NTP (UDP)
161	SNMP (UDP)
162	SNMP TRAPS (UDP)
443	HTTPS (TCP)
502	MODBUS (TCP)
4840	OPCUA (TCP)
5353	MDNS (UDP)
48862	BCOM (UDP)

Environment/EMC

EMC	EN 61326-1

Ambient temperatures

Operating temperature	-25…+55 °C
Transport	-40…+85 °C
Long-term storage	-25…+70 °C

Classification of climatic conditions acc. to IEC 60721:

Stationary use (IEC 60721-3-3)	3K22
Transport (IEC 60721-3-2)	2K11
Long-term storage (IEC 60721-3-1)	1K22

Mechanical conditions acc. to IEC 60721:

Stationary use (IEC 60721-3-3)	3M11
Transport (IEC 60721-3-2)	2M4
Long-term storage (IEC 60721-3-1)	1M12

Connection

Connection type	pluggable push-wire terminals

Push-wire terminals

Conductor sizes	AWG 24-12
Stripping length	10 mm
rigid/flexible	0.2…2.5 mm²
flexible with ferrule, with/without plastic sleeve	0.25…2.5 mm²
Multiple conductor, flexible with TWIN ferrule with plastic sleeve	0.5…1.5 mm²

Push-wire terminal X1

Conductor sizes	AWG 24-16
Stripping length	10 mm
rigid/flexible	0.2…1.5 mm²
flexible with ferrule without plastic sleeve	0.25…1.5 mm²
flexible with ferrule with plastic sleeve	0.25…0.75 mm²

Other

Operating mode	continuous operation
Mounting	front-oriented, cooling slots must be ventilated vertically
Degree of protection, internal components (IEC 60529)	IP30
Degree of protection, terminals (IEC 60529)	IP20
Quick DIN rail mounting acc. to	IEC 60715
Screw mounting	2 x M4
Enclosure type	J460
Enclosure material	polycarbonate
Flammability class	UL94V-0
Dimensions (W x H x D)	107.5 x 93 x 62.9 mm
Documentation number	D00216
Weight	≤ 240 g

( )* = factory settings

Dimension diagram (dimensions in mm)

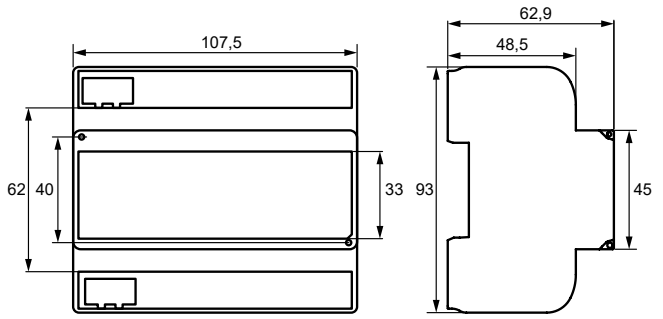

Operating controls and connections

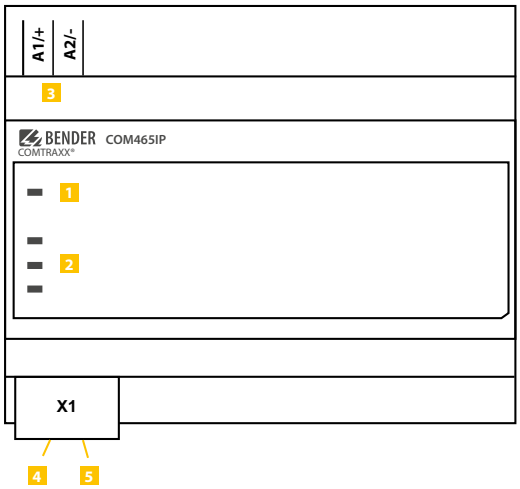

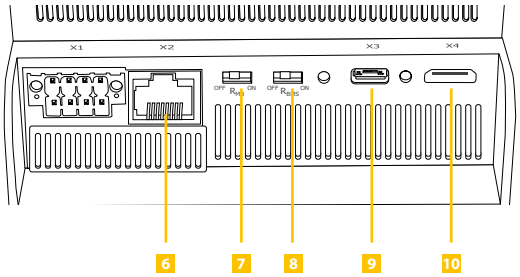

1	**ON**	Flashes during start-up. The LED lights permanently as soon as the device is ready for operation.
2	**ETHERNET/IP** **ISODATA 1** **ISODATA 2**	LEDs show activities on the different interfaces
3	**A1/+, A2/-**	Supply voltage: see nameplate and ordering information
4	**X1**	Modbus/RTU interface: Terminals **A**MB and **B**MB
5	**X1**	BMS bus (Bender measuring device interface): Terminals **A**BMS and **B**BMS
6	**X2**	Ethernet port (RJ45) for connection to the PC network as well as BCOM
7	**$R_{MB\ on/off}$**	Terminating resistor Modbus RTU switch
8	**$R_{BMS\ on/off}$**	Terminating resistor BMS bus switch
9	**X3**	Micro USB interface (currently without function)
10	**X4**	Mini HDMI interface (currently without function)

For UL applications, the following has to be observed:
- **Maximum ambient temperature: 55 °C**
- **Use 60/75-°C copper wires only**

COMTRAXX® COM465DP

Condition Monitor with integrated gateway for the connection of Bender devices to PROFIBUS DP and Ethernet TCP/IP networks

Typical applications

- Optimum display and visualisation of device and system states in the web browser
- Monitoring and analysis of compatible Bender products and third-party devices
- Specific system overview through individual system description
- Selective notification to various users in the event of alarms
- Numerous interfaces for data transfer to higher-level systems
- Clear setting of device parameters. Storing, documenting and restoring parameters is possible
- Commissioning and diagnosis of Bender systems
- Remote diagnosis, remote maintenance

Data transfer interfaces

Approvals

Device features

- Condition monitor for Bender systems
- Integrated modular gateway between Bender systems and TCP/IP enables remote access via LAN, WAN or Internet
- Range of functions adjustable through function modules
- Ethernet (10/100 MBit/s) for remote access via LAN, WAN or Internet
- Support of devices that are connected to the internal or external BMS bus, via BCOM, via Modbus RTU or Modbus TCP
- Integrated gateway between Bender system and PROFIBUS DP
- Individual visualisation can be generated, which is displayed via the web browser

Range of functions (V4.5.0 and higher)

Basic device (without function modules)

- Condition monitor with web interface
- Interfaces for the integration of devices
  – Internal BMS bus (max. 150 devices) and external* BMS bus (max. 99 * 150 devices)
  – BCOM (max. 255 devices)
  – Modbus RTU and Modbus TCP (max. 247 devices each)
- Remote display of the latest measured values, status/alarm messages and parameters*
- Gateway to Modbus TCP: Reading the latest measured values, status/alarm messages from addresses 1…10 of each interface via Modbus TCP
- Gateway to Modbus RTU: Reading the latest measured values, status/alarm messages from addresses 1…10 of the internal BMS interface via Modbus RTU
- Ethernet interface with 10/100 Mbit/s for remote access via LAN, WAN or the Internet
- Setting of internal device parameters and parameters of devices connected via Modbus RTU and Modbus TCP **
- Time synchronisation for all assigned devices
- History memory (20,000 entries)
- Data loggers, freely configurable (30 * 10,000 entries)
- 50 data points from third-party devices (via Modbus RTU or Modbus TCP) can be integrated into the system
- A virtual device with 16 channels can be created
- Support for external applications (e.g. visualisation programs or PLCs) by means of the PROFIBUS DP protocol.
- Reading the latest measured values, status and alarms messages from all assigned devices. Uniform access to all assigned devices by means of PROFIBUS DP via integrated servers.

*) Indicating parameters of BMS bus devices is only possible when the gateway is connected to the internal BMS bus.

**) Parameters can be set via web application and externally (via BMS/ICOM/BCOM), but not via Modbus or PROFIBUS. The parameters of assigned devices can only be read; function module C is necessary for modification of settings!

Function module A

- Allocation of individual texts for devices, channels (measuring points) and alarms.
- Device failure monitoring
- E-mail notification in the event of alarms or system faults to different users.
- Device documentation of any device in the system can be generated.* This contains all associated parameters and measured values as well as device information, such as serial number and software version.
- System documentation can be generated. It documents all devices in the system at once.

*) Generating device documentation of BMS bus devices is only possible if the gateway is connected to the internal BMS bus.

Function module B

- Reading the latest measured values, status and alarms messages from all assigned devices. Uniform access to all assigned devices via Modbus TCP over integrated server.
- Reading the latest measured values, status and alarm messages from all assigned devices via internal BMS. Uniform access to all assigned devices via Modbus RTU.
- Control commands: From an external application (e.g. visualisation software or PLC), commands can be sent to BMS devices via Modbus TCP or Modbus RTU.
- Access to alarms and measured values via SNMP (V1, V2c or V3). SNMP traps are supported.
- Access via PROFINET to alarms and measured values.

Function module C

- Fast and easy parameter setting of all devices* assigned to the gateway via web browser.
- Backups of all devices in the system can be created and restored.

*) Parameter setting of BMS bus devices is only possible when the gateway is connected to the internal BMS bus.

Function module D

Quick and easy-to-create visualisation of the system. Integrated editor provides access to a variety of widgets and functions.

- Display on up to 50 overview pages, where e.g. room plans can be stored. Navigation within these overview pages is possible.
- Access to all measured values that are available in the system.
- Buttons and sliders can be used to send BMS test and reset commands, as well as to control external devices via Modbus TCP.

Function module E

- 100 virtual devices with 16 channels each can be created.

Function module F

- 1,600 data points from third-party devices (via Modbus RTU or Modbus TCP) can be integrated into the system.

Examples:

- To write parameters via Modbus, function modules B and C are required.
- To read parameters via Modbus, function module B is required.
- For parameterisation via PROFIBUS, the function module C is required.

Further information

For further information refer to our product range on www.bender.de.

Ordering information

Type	Supply voltage/frequency range U_s	Power consumption	Application	Art. no.
COM465DP-230 V	AC/DC 24…240 V, 50…60 Hz	≤ 6.5 VA/≤ 4 W	Condition Monitor with integrated gateway: Bender system/PROFIBUS DP/Ethernet	B95061060

Function modules

Application	Function module (software licence)	Art. no.
Individual text messages for all devices/ channels, device failure monitoring, e-mail in the event of an alarm, device documentation	Function module A	B75061011
Provision of data via via Modbus TCP, Modbus RTU, SNMP and PROFINET	Function module B	B75061012
Parameter setting of all integrated devices, device backups	Function module C	B75061013
Visualisation application	Function module D	B75061014
Virtual devices	Function module E	B75061015
Integration of third-party devices	Function module F	B75061016

Insulation coordination acc. to IEC 60664-1/IEC 60664-3

Rated voltage	AC 250 V
Rated impulse voltage/overvoltage category	4 kV/III
Pollution degree	3
Protective separation (reinforced insulation) between	(A1/+, A2/-) - [(AMB, BMB), (ABMS, BBMS), (X2), (X3, X4)]

Supply voltage

Supply voltage U_s	see ordering information
Frequency range U_s	see ordering information
Power consumption	see ordering information

Indications

LEDs:

ON	operation indicator
PROFIBUS	data traffic PROFIBUS DP
ETHERNET IP	data traffic Ethernet
MODBUS RTU	data traffic Modbus
BMS	data traffic BMS
Ethernet (terminal X2)	lights during network connection, flashes during data transfer

Memory

Individual texts (function module A only)	unlimited number of texts each with 100 characters
E-mail configuration and device failure monitoring	max. 250 entries
Number of data points for "third-party devices" to Modbus TCP and Modbus RTU	50
Number of data loggers	30
Number of data points per data logger	10,000
Number of history memory entries	20,000

Visualisation

Number of pages	50
Background image size	3 MB

Interfaces

Ethernet

Port	RJ45
Cable length	< 100 m
Data rate	10/100 MBit/s, autodetect
HTTP mode	HTTP/HTTPS (HTTP)*
DHCP	on/off (off)*
t_{off} (DHCP)	5…60 s (30 s)*
IP address	nnn.nnn.nnn.nnn (192.168.0.254)*, can always be reached via: 169.254.0.1
Net mask	nnn.nnn.nnn.nnn (255.255.0.0)*
Protocols (depending on function module selected)	TCP/IP, Modbus TCP, Modbus RTU, DHCP, SNMP, SMTP, NTP

BMS bus (internal/external)

Interface/protocol	RS-485/BMS internal or BMS external (BMS internal)*
Operating mode	master/slave (master)*
Baud rate BMS	internal 9.6 kBit/s external 19.2; 38,4; 57.6 kBit/s
Cable length	≤ 1,200 m
Cable	shielded, one end of shield connected to PE
recommended:	CAT6/CAT7 min. AWG23
alternative:	twisted pair, J-Y(St)Y min. 2x0,8
Connection	X1 (ABMS, BBMS)
Connection type	refer to connection "push-wire terminal X1"
Terminating resistor	120 Ω (0.25 W), can be connected internally
Device address, internal/external BMS bus	1…150 (1)*/2…99

BCOM

Interface/protocol	Ethernet/BCOM
BCOM system name	(SYSTEM)
BCOM subsystem address	1…255 (1)*
BCOM device address	0…255 (0)*

Modbus

Bender Modbus image	V1, V2 (V2)*

Modbus TCP

Interface/protocol	Ethernet/Modbus TCP
Operating mode	client for Bender Modbus TCP devices and "third-party devices"
Operating mode	server for access to the process image and for Modbus control commands
Parallel data access from different clients	max. 25

Modbus RTU

Interface/protocol	RS-485/Modbus RTU
Operating mode	master/slave (master)*
Baud rate	9.6…57.6 kBit/s
Cable length	≤ 1,200 m
Cable	shielded, one end of shield connected to PE
recommended:	CAT6/CAT7 min. AWG23
alternative:	twisted pair, J-Y(St)Y min. 2x0,8
Connection	X1 (AMB, BMB)
Connection type	refer to connection "push-wire terminal X1"
Terminating resistor	120 Ω (0.25 W), can be connected internally
Supported Modbus RTU slave addresses	2…247

PROFINET

Interface/protocol	Ethernet/PROFINET
Operating mode	Slave (IO-Device)

SNMP

Interface/protocol	Ethernet/SNMP
Versions	1, 2c, 3
Supported devices	queries to all devices (channels) possible
Trap support	yes

PROFIBUS DP

Interface/protocol	RS-485 galvanically separated/PROFIBUS DP
Operating mode	slave
Baud rate	automatic baud rate detection: 9.6 kBit/s…1.5 MBit/s 9.6/19.2/93.75/187.5/500 kBit/s, 1.5 MBit/s
Connection	9-pole sub D
Device address, PROFIBUS DP	1…125 (3)*

Used ports

53	DNS (UDP/TCP)
67, 68	DHCP (UDP)
80	HTTP (TCP)
123	NTP (UDP)
161	SNMP (UDP)
162	SNMP TRAPS (UDP)
443	HTTPS (TCP)
502	MODBUS (TCP)
4840	OPCUA (TCP)
5353	MDNS (UDP)
48862	BCOM (UDP)

Environment/EMC

EMC	EN 61326-1

Ambient temperatures

Operating temperature	-25…+55 °C
Transport	-40…+85 °C
Long-term storage	-25…+70 °C

Classification of climatic conditions acc. to IEC 60721

Stationary use (IEC 60721-3-3)	3K22
Transport (IEC 60721-3-2)	2K11
Long-term storage (IEC 60721-3-1)	1K22

Mechanical conditions acc. to IEC 60721:

Stationary use (IEC 60721-3-3)	3M11
Transport (IEC 60721-3-2)	2M4
Long-term storage (IEC 60721-3-1)	1M12

Connection

Connection type	pluggable push-wire terminals

Push-wire terminals

Conductor sizes	AWG 24-12
Stripping length	10 mm
rigid/flexible	0.2…2.5 mm²
flexible with ferrule, with/without plastic sleeve	0.25…2.5 mm²
Multiple conductor, flexible with TWIN ferrule with plastic sleeve	0.5…1.5 mm²

Push-wire terminal X1

Conductor sizes	AWG 24-16
Stripping length	10 mm
rigid/flexible	0.2…1.5 mm²
flexible with ferrule without plastic sleeve	0.25…1.5 mm²
flexible with ferrule with plastic sleeve	0.25…0.75 mm²

Other

Operating mode	continuous operation
Mounting	front-oriented, cooling slots must be ventilated vertically
Degree of protection, internal components (IEC 60529)	IP30
Degree of protection, terminals (IEC 60529)	IP20
Quick DIN rail mounting acc. to	IEC 60715
Screw mounting	2 x M4
Enclosure type	J460
Enclosure material	polycarbonate
Flammability class	UL94V-0
Dimensions (W x H x D)	107.5 x 93 x 62.9 mm
Documentation number	D00216
Weight	≤ 240 g

( )* = factory settings

Dimension diagram (dimensions in mm)

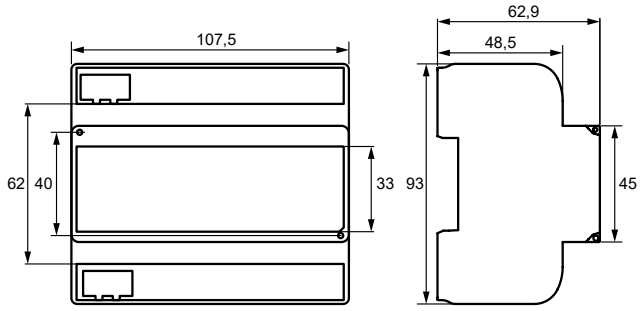

Operating controls and connections

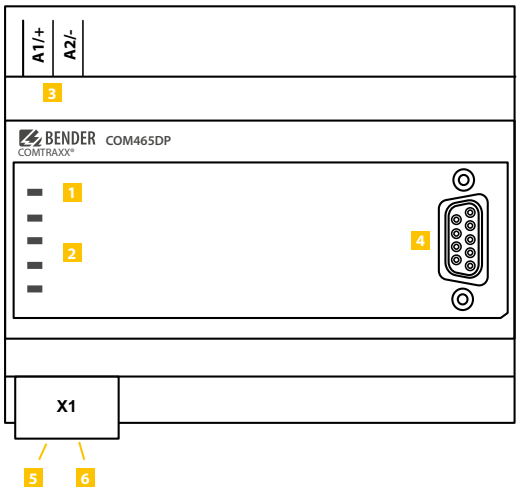

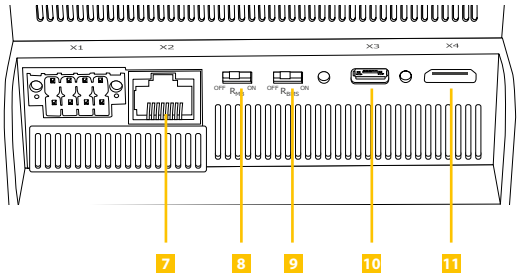

1	**ON**	Flashes during start-up. The LED lights permanently as soon as the device is ready for operation.
2	**PROFIBUS** **ETHERNET/IP** **MODBUS RTU** **BMS**	LEDs show activities on the different interfaces
3	**A1/+, A2/-**	Supply voltage: see nameplate and ordering information
4	**PROFIBUS DP**	Connection PROFIBUS DP
5	**X1**	Modbus/RTU interface: Terminals **A**MB and **B**MB
6	**X1**	BMS bus (Bender measuring device interface): Terminals **A**BMS and **B**BMS
7	**X2**	Ethernet port (RJ45) for connection to the PC network as well as BCOM
8	**$R_{MB\ on/off}$**	Terminating resistor Modbus RTU switch
9	**$R_{BMS\ on/off}$**	Terminating resistor BMS bus switch
10	**X3**	Micro USB interface (currently without function)
11	**X4**	Mini HDMI interface (currently without function)

For UL applications, the following must be observed:
– Maximum ambient temperature: 55 °C
– Only 60/75 °C copper wires must be used

COMTRAXX® COM465ID

Condition Monitor with an integrated gateway for the connection of Bender isoData devices to Ethernet TCP/IP networks

Typical applications

- Optimum display and visualisation of device and plant statuses in the web browser
- Collecting information from the Bender system and making it available via Modbus TCP and OPC UA
- Specific system overview through individual installation description
- Selective notification to various users in case of alarms
- Information from the Bender system can be transmitted to POWERSCOUT® for analysis and archiving.
- Commissioning and diagnosis of Bender systems
- Remote diagnosis, remote maintenance

Approvals

CE UKCA

Device features

- Condition Monitor for Bender systems
- Integrated modular gateway between Bender systems and TCP/IP enables remote access via LAN, WAN or the Internet
- Range of functions adjustable through function modules
- Ethernet (10/100 Mbit/s) for remote access via LAN, WAN or the Internet
- Integration of devices that are connected via IsoData or BCOM
- OPC UA interface for data transmission

Range of functions

Basic device (without function modules)

- Condition Monitor with a web interface for use with Bender isoData and BCOM as well as universal measuring devices.
- Support for devices that are connected
  – via IsoData (1 device per interface),
  – via the BCOM interface (see the BCOM operating manual),
  – via Modbus TCP (max. 247 devices).
- Remote display of present measured values, operating status and alarm messages.
- Gateway to Modbus TCP: Reading the latest subsystem measured values, operating status and alarm messages from addresses 1…10 via Modbus TCP.
- Ethernet interface with 10/100 Mbit/s for remote access via LAN, WAN or the Internet.
- Setting for internal parameters and for configuration of Bender universal measuring devices and energy meters.*
- Time synchronisation for all assigned devices.
- History memory (1,000 entries).
- Data loggers, freely configurable (30 * 10,000 entries).
- 50 data points from third-party devices (via Modbus TCP) can be integrated into the system.
- A virtual device with 16 channels can be created.

*) Individual parameters can be set via a web-based application and externally (via BCOM), but not via Modbus. The parameters of assigned devices can only be read; in order to change settings, function module C is required!

No reports can be generated – also not for your own device.

Function module A

- Assigning individual texts for devices, channels (measuring points) and alarms
- Device failure monitoring
- E-mail notification in the event of alarms or system faults to different users
- Configuration of e-mail notifications
- Device documentation can be created by any device in the system. Present measured values, settings and software statuses are stored.
- System documentation can be created. It documents all devices in the system at once.

Function module B

- Supports external applications (e.g. visualisation programs or PLCs) by means of the Modbus TCP protocol.
- Reading the latest measured values, operating status and alarms messages from all assigned devices. Uniform access to all assigned devices by means of Modbus TCP via an integrated server.
- Control commands: From an external application (e.g. visualisation software or PLC), commands can be sent to devices by means of Modbus TCP.
- Access to alarms and measurement values via SNMP protocol (V1, V2c or V3).

Function module C

- Quick and easy parameterisation of all devices* assigned to the gateway via web browser.
- Backups can be generated and restored from all devices in the system.

*) Only BCOM devices can be parameterised. IsoData devices cannot be parameterised.

Function module D*

Fast, simple visualisation without programming. Device statuses, alarms or readings can be arranged and displayed (e.g. a spatial plan) in front of a background image.

- Display of an overview covering several pages. Jump to another view page and return to the overview page.
- Graphical display of the data loggers with scaling of the time axis.

*) Currently, the Silverlight web interface is still necessary for this function.

Function module E

- 100 virtual devices with 16 channels each can be created.

Function module F

- 1,600 data points from third-party devices (via Modbus TCP) can be integrated into the system.

Examples:

- To write parameters via Modbus, the function modules B and C are required.
- To read parameters via Modbus, the function module B is required.

Further information

For further information refer to our product range on www.bender.de.

Ordering information

Type	Supply voltage/Frequency range U_S	Power consumption	Application	Art. No.
COM465ID-230 V	AC/DC 24…240 V, 50…60 Hz	≤ 6.5 VA/≤ 4 W	Condition Monitor with an integrated gateway: Bender system/Ethernet	B95061070

Function modules

Application	Function module (software licence)	Art. No.
Individual texts for devices/channels, device failure monitoring, e-mail in case of an alarm	Function module A	B75061011
Modbus TCP server for max. 98 * 139 BMS nodes as well as BCOM and universal measuring devices, SNMP server	Function module B	B75061012
Parameter setting of BMS devices as well as BCOM and universal measuring devices	Function module C	B75061013
Visualisation of Bender systems, System visualisation	Function module D	B75061014
Virtual devices	Function module E	B75061015
Integrating third-party devices	Function module F	B75061016

Insulation coordination acc. to IEC 60664-1/IEC 60664-3

Rated voltage	AC 250 V
Rated impulse voltage/Overvoltage category	4 kV/III
Pollution degree	3
Protective separation (reinforced insulation) between	(A1/+, A2/-) - [(AMB, BMB), (ABMS, BBMS), (X2)]

Supply voltage

Supply voltage U_S	see ordering details
Frequency range U_S	see ordering details
Power consumption	see ordering details

Indication

LEDs:

ON	operation indicator
ETHERNET IP	data traffic Ethernet
ISODATA1	data traffic ISODATA1
ISODATA2	data traffic ISODATA2
Ethernet (X2 terminal)	lights during network connection, flashes during data transmission

Internal memory

E-mail configuration (function module A only) and device failure monitoring	max. 250 entries
Individual texts (function module A only)	unlimited number of texts with 100 characters each
Number of data points for "third-party devices" on Modbus TCP and Modbus RTU	50
Data loggers	30
Number of data points per data logger	10,000
Number of history memory entries	1,000

Visualisation

Number of pages	20
Size of the background image	50 kByte (scaled down if larger)
Data points (per page)	50 devices or channels, 150 text elements

Interfaces

Ethernet

Port	RJ45
Data rate	10/100 Mbit/s, autodetect
DHCP	on/off (on)*
t_{off} (DHCP)	5…60 s (30 s)*
IP address	nnn.nnn.nnn.nnn, can always be reached over: 192.168.0.254, (169.254.0.1)*
Netmask	nnn.nnn.nnn.nnn (255.255.0.0)*
Protocols (depending on function module selected)	TCP/IP, Modbus TCP, Modbus RTU, DHCP, SMTP, NTP, OPC UA

SNMP

Versions	1, 2c, 3
Devices supported	Queries to all devices (channels) possible (no trap functionality)

ISODATA

Interface/protocol	RS-485/ISODATA
Operating mode	master
Baud rate ISODATA	9.6 kbit/s
Cable length	≤ 1200 m
Cable: twisted pair, shielded, one end of shield connected to PE	recommended: J-Y(St)Y min. 2x0.8
Connection	X1 (A-ID1, B-ID1, A-ID2, B-ID2)
Connection type	refer to connection "push-wire terminal X1"
Terminating resistor	120 Ω (0.25 W), can be connected internally
Device address	ISODATA1 (2); ISODATA2 (3)

BCOM

Interface/protocol	Ethernet/BCOM
BCOM subsystem address	1…99 (1)*
BCOM device address	1…99 (2)*

Modbus TCP

Interface/protocol	Ethernet/Modbus TCP
Operating mode	client for associated PEM and "third-party devices"
Operating mode	server for access to the process image and for Modbus control commands
Parallel data access by different clients	max. 8

Environment/EMC

EMC	EN 61326-1

Ambient temperatures

Operating temperature	-25…+55 °C
Transport	-40…+85 °C
Long-term storage	-25…+70 °C

Classification of climatic conditions acc. to IEC 60721

Stationary use (IEC 60721-3-3)	3K22 (except condensation and formation of ice)
Transport (IEC 60721-3-2)	2K11
Long-term storage (IEC 60721-3-1)	1K22

Classification of mechanical conditions acc. to IEC 60721

Stationary use (IEC 60721-3-3)	3M11
Transport (IEC 60721-3-2)	2M4
Long-term storage (IEC 60721-3-1)	1M12

Connection

Connection type	pluggable push-wire terminals

Push-wire terminals

Conductor sizes	AWG 24-12
Stripping length	10 mm
rigid/flexible	0.2…2.5 mm²
flexible with ferrule, with/without plastic sleeve	0.25…2.5 mm²
Multiple conductor, flexible with TWIN ferrule with plastic sleeve	0.5…1.5 mm²

Push-wire terminal X1

Conductor sizes	AWG 24-16
Stripping length	10 mm
rigid/flexible	0.2…1.5 mm²
flexible with ferrule without plastic sleeve	0.25…1.5 mm²
flexible with ferrule with plastic sleeve	0.25…0.75 mm²

Other

Operating mode	continuous operation
Mounting	front-oriented, cooling slots must be ventilated vertically
Degree of protection, internal components (IEC 60529)	IP30
Degree of protection, terminals (IEC 60529)	IP20
DIN rail mounting acc. to	IEC 60715
Screw fixing	2 x M4
Enclosure type	J460
Enclosure material	polycarbonate
Flammability class	UL94V-0
Dimensions (W x H x D)	107.5 x 93 x 62.9 mm
Documentation number	D00368
Weight	≤ 240 g

( )* = Factory settings

Dimension diagram (dimensions in mm)

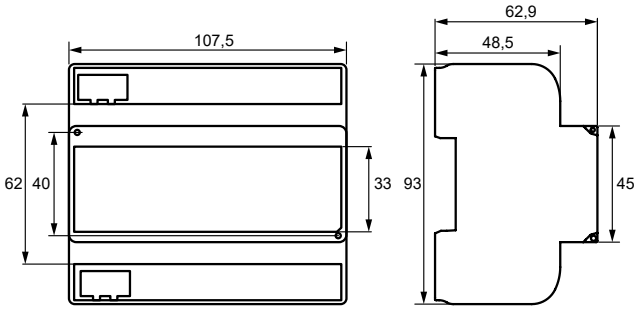

Operating controls and connections

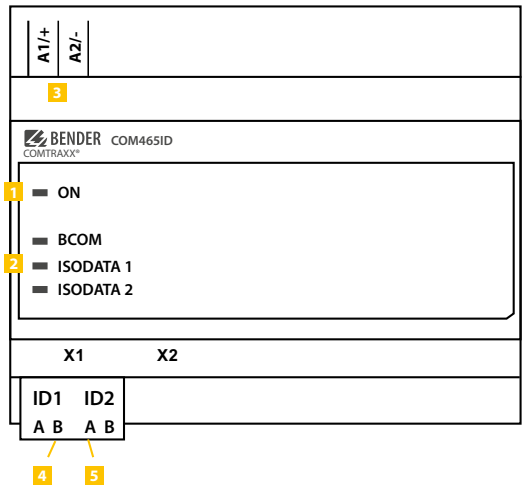

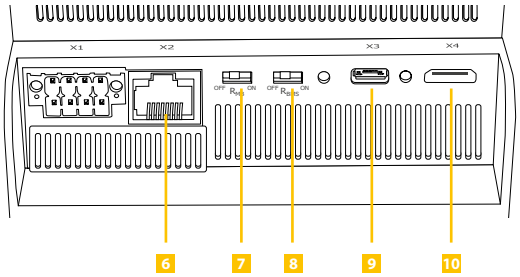

1	**ON**	The LED flashes during start-up. The LED lights permanently as soon as the device is ready for operation.	5	**X1**	IsoData 1 interface 2
2	**ETHERNET/IP** **ISODATA 1** **ISODATA 2**	LEDs show activities on the different interfaces	6	**X2**	Ethernet port (RJ45) for connection to the PC network as well as BCOM
3	**A1/+, A2/-**	Voltage supply: see nameplate and ordering details	7	**R_{MB} on/off**	IsoData 1 terminating resistor switch
4	**X1**	IsoData 1 interface 1	8	**R_{BMS} on/off**	IsoData 2 terminating resistor switch
			9	**X3**	Micro USB interface (currently without function)
			10	**X4**	Mini HDMI interface (currently without function)

COMTRAXX® COM463BC

Gateway for data exchange between the interfaces BCOM and external BMS

Device features

- Gateway for data exchange between the interfaces BCOM and external BMS
- Ethernet (10/100 Mbit/s) for remote access via LAN, WAN or the Internet
- Configurable data exchange between BCOM and external BMS

Further information

For further information refer to our product range on www.bender.de.

Typical applications

- Information exchange between BCOM and external BMS systems
- Configuration of the information to be transferred from one system to the other
- Several external BMS systems can be displayed together with BCOM systems in one overview
- Selective notification to different users in case of alarms
- Remote diagnosis, remote maintenance

Approvals

Ordering information

Type	Supply voltage/Frequency range U_s	Power consumption	Application	Art. No.
COM463BC-230 V	AC/DC 24…240 V, 50…60 Hz	≤ 6.5 VA/≤ 4 W	Gateway for the connection of systems with BCOM and external BMS	B95061051

Technical data

Insulation coordination acc. to IEC 60664-1/IEC 60664-3

Rated insulation voltage	AC 250 V
Rated impulse voltage/Overvoltage category	4 kV/III
Pollution degree	3
Protective separation (reinforced insulation) between	(A1/+, A2/-) - [(AMB, BMB), (ABMS, BBMS), (X2), (X3, X4)]

Supply voltage

Supply voltage U_s	see ordering information
Frequency range U_s	see ordering information
Power consumption	see ordering information

Indications

LEDs:

ON	operation indicator
ETHERNET IP	data traffic Ethernet
BMS	data traffic BMS
Ethernet (terminal X2)	lights during network connection, flashes during data transfer

Memory

E-mail configuration and device failure monitoring	max. 250 entries
Individual texts	unlimited number of texts with 100 characters each

Interfaces

Ethernet

Port	RJ45
Data rate	10/100 MBit/s, autodetect
DHCP	on/off (on)*
t_{off} (DHCP)	5…60 s (30 s)*
IP address	nnn.nnn.nnn.nnn, can always be reached over: 192.168.0.254, (169.254.0.1)*
IP adresse	nnn.nnn.nnn.nnn (192.168.0.254)*
IP adresse static	169.254.0.1
Netmask	nnn.nnn.nnn.nnn (255.255.0.0)*
Protocols	TCP/IP, DHCP, SMTP, NTP

BMS bus (external)

Interface/protocol	RS-485/external BMS (external BMS)*
Operating mode	master/slave (master)*
Baud rate BMS	external 19.2; 38.4; 57.6 kBit/s
Cable length	≤1,200 m
Cable: twisted pair, shielded, one end of shield connected to PE	recommended: J-Y(St)Y min. 2x0.8
Connection	X1 (ABMS, BBMS)
Connection type	refer to connection "push-wire terminal X1"
Terminating resistor	120 Ω (0.25 W), can be connected internally
Device address, external BMS bus	2…99 (2)*

BCOM

Interface/protocol	Ethernet/BCOM
BCOM subsystem address	1…255 (1)*
BCOM device address	0…255 (0)*

Technical data (continued)

Environment/EMC	
EMC	EN 61326-1
Ambient temperatures	
Operation	-25…+55 °C
Transport	-40…+85 °C
Long-term storage	-25…+70 °C
Classification of climatic conditions acc. to IEC 60721	
Stationary use (IEC 60721-3-3)	3K24 (except condensation and formation of ice)
Transport (IEC 60721-3-2)	2K11
Long-term storage (IEC 60721-3-1)	1K22
Classification of mechanical conditions acc. to IEC 60721	
Stationary use (IEC 60721-3-3)	3M11
Transport (IEC 60721-3-2)	2M4
Long-term storage (IEC 60721-3-1)	1M12

Connection	
Connection type	pluggable push-wire terminals
Push-wire terminals	
Conductor sizes	AWG 24-12
Stripping length	10 mm
rigid/flexible	0.2…2.5 mm²
flexible with ferrule, with/without plastic sleeve	0.25…2.5 mm²
Multiple conductor, flexible with TWIN ferrule with plastic sleeve	0.5…1.5 mm²

Push-wire terminal X1	
Conductor sizes	AWG 24-16
Stripping length	10 mm
rigid/flexible	0.2…1.5 mm²
flexible with ferrule without plastic sleeve	0.25…1.5 mm²
flexible with ferrule with plastic sleeve	0.25…0.75 mm²

Other	
Operating mode	continuous operation
Mounting	front-oriented, cooling slots must be ventilated vertically
Degree of protection, internal components (IEC 60529)	IP30
Degree of protection, terminals (IEC 60529)	IP20
Quick DIN rail mounting acc. to	IEC 60715
Screw fixing	2 x M4
Enclosure type	J460
Enclosure material	polycarbonate
Flammability class	UL94V-0
Dimensions (W x H x D)	107.5 x 93 x 62.9 mm
Documentation number	D00427
Weight	≤ 240 g

( )* = factory settings

Dimension diagram (dimensions in mm)

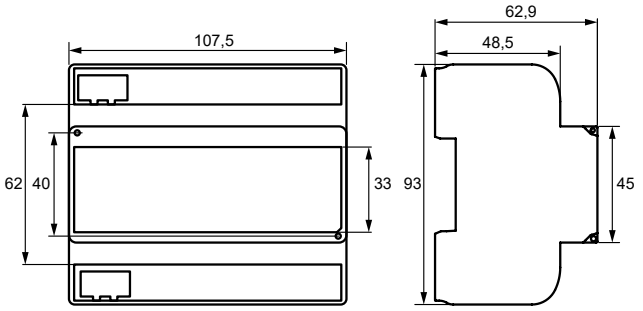

Operating controls and connections

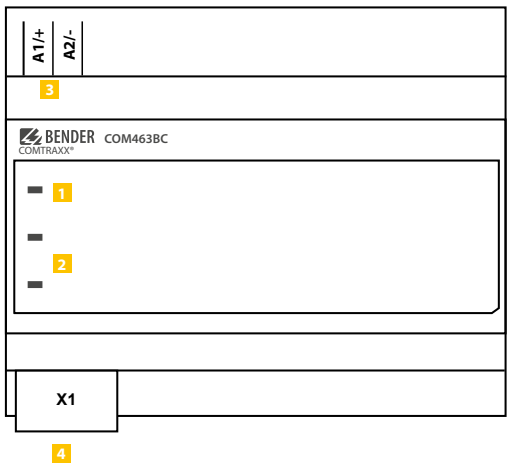

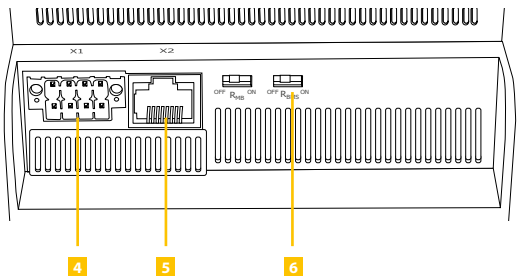

1	**ON**	4	**X1**
	"ON" LED: Flashes during start-up. The LED lights permanently as soon as the device is ready for operation.		BMS bus (Bender measuring device interface)
2	**BCOM, BMS**	5	**X2**
	LEDs show activities on the different interfaces		Ethernet port (RJ45) for connection to the PC network as well as to BCOM
3	**A1/+, A2/-**	6	**$R_{BMS\ on/off}$**
	Supply voltage: see nameplate and ordering information		Terminating resistor BMS bus switch

COMTRAXX® CP9…-I

Alarm indicator and operator panel for medical locations and other areas

Typical applications

- Monitoring and parameter setting of all Bender products that support communication
- Mounting in the control cabinet door so that all information is immediately visible
- Commissioning and diagnosis of Bender systems
- Remote diagnosis and remote maintenance
- Control stations in all areas
- Monitoring and analysis of data centres

Data transfer interfaces

Modbus, PI CERTIFIED PROFIBUS • PROFINET, SNMP Simple Network Management Protocol

Approvals

CE, UKCA, c UL us LISTED

only CP907-I

Device features

- Display size 7″ and 15.6″ with tempered and anti-reflective glass
- Easy to clean and disinfect, degree of protection IP54
- Screwless mounted front plate
- Condition monitor for Bender systems
- Integrated modular gateway between Bender systems and TCP/IP
- Remote access via LAN, WAN or Internet
- Support of devices that are connected to the internal BMS bus, via BCOM, Modbus RTU or Modbus TCP
- Individual visualisation can be generated, which can be viewed via the web browser or on the display
- Silent due to operation without fan
- High-quality representation with excellent contrast, high resolution and a wide viewing angle
- Possibility of graphical integration of building plans or status display in photo quality
- Visual and acoustic notification in the event of an alarm

Further information

For further information refer to our product range on www.bender.de.

Ordering information

Complete devices

Type	Display size	Supply	Device dimensions (W x H x D)	Weight	Enclosure	Display unit Glass, tempered	Art. No.
CP907-I	7" (17.6 cm)	DC 24 V, < 15 W	226 x 144 x 78 mm	1.1 kg	Flush-mounting enclosure	white	B95061031
			226 x 144 x 65 mm	1.0 kg	Control cabinet door mounting	white	B95061032
CP915-I	15.6" (38.6 cm)	AC 100…240 V, < 30 W	505 x 350 x 92 mm	6.1 kg	Flush-mounting enclosure	white	B95061033
						grey	B95061034

Scope of delivery: Display unit, control cabinet door mounting or flush-mounting enclosure incl. mounting plate with electronics, CP9xx connecting cable and plug kit.

Components separately

Device series	Type	Art. No.
CP907-I	Flush-mounting enclosure	B95100140
CP915-I	Display unit white	B95061090
	Display unit grey	B95061110
	Flush-mounting enclosure incl. mounting plate with electronics	B95061092

Accessories

Device series	Description	Art. No.
all	CP9…-I replacement plug kit	B95061910
CP915-I	CP9…-I suction lifter [1]	B95061911
CP907-I	CP907-I surface-mounting enclosure	B95061915
CP915-I	CP915-I surface-mounting enclosure	B22301077

[1] The suction lifter is required to remove the display of the CP915-I.

Insulation coordination acc. to IEC 60664-1

CP907-I

Rated voltage	50 V
Overvoltage category	III
Pollution degree	2
Rated impulse voltage	800 V

CP915-I

Rated voltage	AC 250 V
Overvoltage category	III
Pollution degree	2
Rated impulse voltage	4 kV

Supply

CP907-I via plug-in terminal (A1/+;A2/-)

Nominal voltage	DC 24 V SELV/PELV
Nominal voltage tolerance	±20 %
Typical power consumption at DC 24 V	< 15 W
Maximum cable length when supplied via B95061210 (24 V DC power supply unit 1.75 A):	
0.28 mm²	75 m
0.5 mm²	130 m
0.75 mm²	200 m
1.5 mm²	400 m
2.5 mm²	650 m

CP907-I via Power-over-Ethernet (PoE)

Nominal voltage	DC 48 V SELV/PELV
Nominal voltage tolerance	-25…+15 %
Typical power consumption for PoE	< 15 W
Maximum cable length when supplied via AWG 26/7; 0.14 mm²	100 m

CP915-I via terminal block (L1; N)

Nominal voltage CP915-I via external power supply unit	AC 100… 240 V
Nominal voltage tolerance	-15…+10 %
Frequency range U_s	50…60 Hz
Typical power consumption at AC 230 V	< 30 W

Stored energy time in the event of voltage failure

Time, date	min. 3 days

Displays, memory

Display	
CP907-I	7" TFT touch display
CP915-I	15.6" TFT touch display
E-mail configuration and device failure monitoring	max. 250 entries
Individual texts	unlimited number of texts with 100 characters each
Number of data points for "third-party devices" to Modbus TCP and Modbus RTU	1 600
Number of data loggers	30
Number of data points per data logger	10 000
Number of history memory entries	20 000

Visualisation

Number of pages	50
Background image size	max. 3 MB

Interfaces

Ethernet

Connection	RJ45
Cable	shielded, both ends of shield connected to PE
Cable length	< 100 m
Data rate	10/100 Mbit/s, autodetect
HTTP mode	HTTP/HTTPS (HTTP)*
DHCP	on/off (off)*
T_{off} (DHCP)	5…60 s (30 s)*
IP address	nnn.nnn.nnn.nnn (192.168.0.254)*, can always be reached via: 169.254.0.1
Net mask	nnn.nnn.nnn.nnn (255.255.0.0)*
Protocols	TCP/IP, Modbus TCP, Modbus RTU, PROFINET, DHCP, SNMP, SMTP, NTP

BMS bus

Interface/protocol	RS-485/BMS internal
Operating mode	master/slave (master)*
Baud rate	9.6 kBit/s
Cable length	< 1200 m
Cable	shielded, one end of shield connected to PE
recommended:	CAT6/CAT7 min. AWG23
alternative:	twisted pair, J-Y(St)Y min. 2x0,8
Connection	"ABMS", "BBMS" (see plug-in terminal)
Terminating resistor	120 Ω (0.25 W), can be connected internally (see plug-in terminal)
Device address	1…150 (1)*

BCOM

Interface/protocol	Ethernet/BCOM
Cable length	< 100 m
BCOM system name	(SYSTEM)*
BCOM subsystem address	1…255 (1)*
BCOM device address	0…255 (0)*

Modbus

Bender Modbus image	V1, V2 (V2)*

Modbus TCP

Interface/protocol	Ethernet/Modbus TCP
Cable length	< 100 m
Operating mode	client for Bender Modbus TCP devices and "third-party devices"
Operating mode	server for access to process image and for Modbus control commands
Parallel data access for different clients	max. 25

Modbus RTU

Interface/protocol	RS-485/Modbus RTU
Cable length	< 1200 m
Cable	shielded, one end of shield connected to PE
recommended:	CAT6/CAT7 min. AWG23
alternative:	twisted pair, J-Y(St)Y min. 2x0,8
Connection	"AMB", "BMB" (see plug-in terminal)
Operating mode	master/slave (master)*
Baud rate	9.6…57.6 kBit/s
Terminating resistor	120 Ω (0.25 W), can be connected internally (see plug-in terminal)
Supported Modbus RTU slaves addresses	2…247

PROFINET

Interface/protocol	Ethernet/PROFINET
Operating mode	slave (IO device)

SNMP

Interface/protocol	Ethernet/SNMP
Versions	1, 2c, 3
Supported devices	query of all devices (channels) possible
Trap support	yes

USB

Number	2
Operating mode	USB 2.0 host (5 V, 500 mA)
Data rate	480 Mbit/s
Cable length	< 3 m
Connection type	USB 2 Standard-A

Used ports

53	DNS (UDP/TCP)
67, 68	DHCP (UDP)
80	HTTP (TCP)
123	NTP (UDP)
161	SNMP (UDP)
162	SNMP TRAPS (UDP)
443	HTTPS (TCP)
502	MODBUS (TCP)
4840	OPCUA (TCP)
5353	MDNS (UDP)
48862	BCOM (UDP)

Digital inputs (1…12)

Number	12
Galvanic separation	yes
Maximum cable length	< 1000 m
Operating mode	selectable for each input: active-high or active-low
Factory setting	active-high
Voltage range (high)	AC/DC 10…30 V
Voltage range (low)	AC/DC 0…2 V
Max. current per channel (at AC/DC 30 V)	8 mA
Connection push-in terminal	(1-1) (2-2) (3-3) … (12-12)

Switching elements

Number	1 relay
Operating mode	N/C operation or N/O operation
Function	programmable
Electrical endurance under rated operating conditions, number of cycles	10,000

Contact data acc. to IEC 60947-5-1:

Utilisation category	AC-13	AC-14	DC-12
Rated operational voltage	24 V	24 V	24 V
Rated operational current	2 A	2 A	2 A
Minimum contact load (relay manufacturer's reference)		10 µA / 10 mV DC	
Connection plug-in terminal			(11;12;14)

Technical data (continued)

Buzzer	
Buzzer message	can be acknowledged, adoption of characteristics of new value
Buzzer interval	configurable
Buzzer frequency	configurable
Buzzer repetition	configurable

Audio	
Line IN	not used
Line OUT	Output to a STEREO playback device via 3.5 mm jack plug
Cable length	< 3 m

Device connections	
Terminal block (L1; N; PE) (for CP915-I only)	
Conductor sizes	AWG 20-12
Stripping length	10…11 mm
rigid/flexible	0.5…4 mm²
flexible with ferrule with/without plastic sleeve	0.5…4 mm²
Multiple conductor, flexible with TWIN ferrule with plastic sleeve	0.5…4 mm²
Plug-in terminal (A1/+;A2/-) (11;12;14)	
Plug-in terminal (A1/+;A2/-PE) (11;12;14)	
Conductor sizes	AWG 24-12
Stripping length	10 mm
rigid/flexible	0.2…2.5 mm²
flexible with ferrule, with/without plastic sleeve	0.25…2.5 mm²
Multiple conductor, flexible, with TWIN ferrule with plastic sleeve	0.5…1.5 mm²
Plug-in terminal (l1…12), (k1…k12), (…MB), (…BMS)	
Conductor sizes	AWG 24-16
Stripping length	10 mm
rigid/flexible	0.2…1.5 mm²
flexible with ferrule without plastic sleeve	0.25…1.5 mm²
flexible with ferrule with plastic sleeve	0.25…0.75 mm²
For UL-applications (only CP907-I)	
Use copper conductors only.	
Minimum temperature rating of the cable to be connected to the field wiring terminals	75 °C
Minimum temperature rating of the cable to be connected to the PoE plug	80 °C

Environment/EMC	
EMC	IEC 61326-1
Operating temperature	
CP907-I	-10…+55 °C
CP907-I for UL-Applications	-10…+50 °C
CP915-I	-5…+40 °C
Operating altitude	≤ 2000 m AMSL
Rel. humidity	≤ 98 % at 25 °C
Classification of climatic conditions acc. to IEC 60721:	
Stationary use (IEC 60721-3-3)	3K22
Transport (IEC 60721-3-2)	2K11
Long-term storage (IEC 60721-3-1)	1K22
Classification of mechanical conditions acc. to IEC 60721:	
Stationary use (IEC 60721-3-3) CP907-I only	3M11
Stationary use (IEC 60721-3-3) CP915-I only	3M10
Transport (IEC 60721-3-2)	2M4
Long-term storage (IEC 60721-3-1)	1M12

Other	
Operating mode	continuous operation
Mounting	display-oriented
Degree of protection, front	IP54
Degree of protection, front for UL applications	IP50
Degree of protection, enclosure	IP20
Flammability class	UL 94V-0
Device dimensions	
CP907-I (W x H x D)	226 x 144 x 78 mm
CP915-I (W x H x D)	505 x 350 x 95 mm
Documentation number	D00418
Weight	
CP907-I	< 1.1 kg
CP915-I	< 6.1 kg

( )* = factory settings

Dimensions

External dimensions

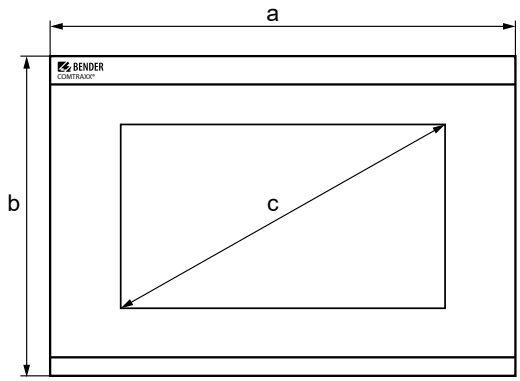

Type	Dimensions (mm)		
	a	b	c
CP907-I	226	144	176 (7")
CP915-I	505	350	386 (15.6")

Glass thickness 3 mm

Installation dimensions – panel cut-out

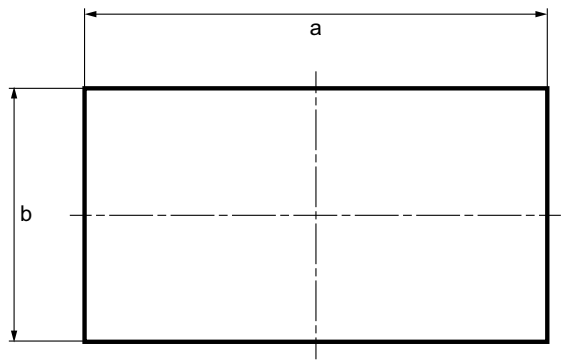

Type	Enclosure	Dimensions (mm)		Required installation depth
		a	b	
CP907-I	Flush-mounting enclosure	212	124	75
	Door	215	124	65
	Surface-mounting	299	173	–
CP915-I	Flush-mounting enclosure	464	309	92
	Surface-mounting	511	356	–

COMTRAXX® CP9xx

Alarm indicator and operator panel for medical locations and other areas

Typical applications

Monitoring, operation and display of:

- Medical Isolated Power Systems (IPS)
- Supply systems for medical gases
- Ventilation and air-conditioning systems
- Room lighting
- Operating theatre lights
- Special power supply systems (BSV (battery-based safety power supply) or UPS (uninterruptible power supply)
- Further systems from different manufacturers.

Approvals

only CP907

Device features

- Display size 7", 15" and 24" with tempered and anti-reflective glass
- Easy to clean and to desinfect, degree of protection IP54
- Screwless mounted front plate
- User-friendly touch-sensitive monitoring system for medical locations and other applications
- Particularly simple operation
- Additional information for medical and technical personnel
- Visual and acoustic notification in the event of an alarm
- Clear menu structure with self-explanatory interactive images
- Clearly marked safety functions
- Silent due to operation without fan
- High-quality representation with excellent contrast, high resolution and a wide viewing angle
- Possibility of graphical integration of building plans or status display in photo quality
- Easy integration of external subsections like charging stations for operating theatre table controls and intercom systems with front foil
- Simple conversion and expansion with minimal service interruptions

Further information

For further information refer to our product range on www.bender.de.

Ordering information

Complete devices

Type	Display size	Supply	Device dimensions (W x H x D)	Weight	Display unit glass, tempered	Art. No.[1]
CP907	7" (17.6 cm)	DC 24 V, < 15 W; alternatively PoE possible	226 x 144 x 78 mm	1.1 kg	white	B95061080
CP907 without Flush-mounting enclosure				0.9 kg	white	B95061093
CP915	15,6" (39.6 cm)	AC 100…240 V, < 30 W	505 x 350 x 92 mm	6.1 kg	white	B95061081
					grey	B95061085
CP924	24" (61 cm)	AC 100…240 V, < 55 W	654 x 441 x 100 mm	9.1 kg	white	B95061083
					grey	B95061084

[1] In the offer phase the Art. No. may differ

Scope of delivery: display unit, flush-mounting enclosure incl. mounting plate with electronics, CP9xx connecting cable and plug connector kit.

Components separately

Device series	Type	Art. No.[1]
CP907	Flush-mounting enclosure	B95100140
CP915	Display unit white	B95061112
	Display unit grey	B95061110
CP924	Display unit white	B95061115
	Display unit grey	B95061116

[1] In the offer phase the Art. No. may differ

Accessories

Device series	Description	Art. No.
CP907	Surface-mounting enclosure	B95061915
CP915, CP924	CP9xx suction lifter 1)	B95061911
All	CP9xx replacement plug kit	B95061910

[1] The suction lifter is needed to remove the display.

Other project-specific versions with foil surface or with additional internal components available on request:

- Charging tray for operating theatre table remote controls
- Intercom systems
- Operating theatre light controls
- Programmable backlit keypads
- Digital/Analogue inputs/outputs for installation in panel enclosures or control cabinets
- Data coupling to third-party systems
- Project-specific built-in enclosures
- Integration of third-party systems
- Antibacterial or highly transparent foil
- Exchange of existing control panels (Retrofit)
- etc.

Technical data

Insulation coordination acc. to IEC 60664-1	
CP907	
Rated voltage	50 V
Overvoltage category	III
Pollution degree	2
Rated impulse voltage	800 V
CP915/CP924	
Rated insulation voltage	AC 250 V
Overvoltage category	III
Pollution degree	2
Rated impulse voltage	4 kV

Supply	
CP907 via plug-in terminal (A1/+;A2/-)	
Nominal voltage	DC 24 V SELV/PELV
Nominal voltage tolerance	±20 %
Typical power consumption at DC 24 V	< 15 W
Maximum cable length when supplied via B95061210 (DC 24 V power supply unit 1.75 A):	
0.28 mm²	75 m
0.5 mm²	130 m
0.75 mm²	200 m
1.5 mm²	400 m
2.5 mm²	650 m
CP907 via Power-over-Ethernet (PoE)	
Nominal voltage	DC 48 V SELV/PELV
Nominal voltage tolerance	-25…+15 %
Typical power consumption for PoE	< 15 W
Maximum cable length when supplied via AWG 26/7; 0.14 mm²	100 m
CP915 via terminal block (L1; N)	
Nominal voltage via external power supply unit	AC 100… 240 V
Nominal voltage tolerance	-15…+10 %
Frequency range U_s	50…60 Hz
Typical power consumption at AC 230 V	< 30 W
CP924 via terminal block (L1; N)	
Nominal voltage via external power supply unit	AC 100… 240 V
Nominal voltage tolerance	-15…+10 %
Frequency range U_s	50…60 Hz
Typical power consumption at AC 230 V	< 55 W

Stored energy time in the event of voltage failure	
Time, date	min. 3 days

Displays, memory	
Display/Resolution	
CP907	7″ TFT touch display/800 x 480
CP915	15.6″ TFT touch display/1280 x 720
CP924	24″ TFT touch display/1280 x 720 or 1920 x 1080
E-mail configuration and device failure monitoring	max. 250 entries
Individual texts	unlimited number of texts with 100 characters each
Displayable devices	247
Number of data points for "third-party devices" to Modbus TCP and Modbus RTU	1600
Number of data loggers	30
Number of data points per data logger	10,000
Number of entries in the history memory	20,000

Visualisation	
Number of pages	50
Background image size	max. 3 MB

Interfaces	
Ethernet	
Connection	RJ45
Cable	shielded, shield on both sides to PE
Cable length	< 100 m
Data rate	10/100 Mbit/s, autodetect
HTTP mode	HTTP/HTTPS (HTTP)*
DHCP	on/off (off)*
t_{off} (DHCP)	5…60 s (30 s)*
IP address	nnn.nnn.nnn.nnn (192.168.0.254)*, can always be reached via: 169.254.0.1
Net mask	nnn.nnn.nnn.nnn (255.255.0.0)*
Protocols	TCP/IP, Modbus TCP, Modbus RTU, PROFINET, DHCP, SNMP, SMTP, NTP
BMS bus	
Interface/protocol	RS-485/BMS internal
Operating mode	master/slave (master)*
Baud rate	9.6 kbit/s
Cable length	< 1200 m
Cable	shielded, one end of shield connected to PE
recommended	CAT6/CAT7 min. AWG23
alternative	twisted pair, J-Y(St)Y min. 2x0,8
Connection	„ABMS", „BBMS" (see plug-in terminal)
Terminating resistor	120 Ω (0.25 W), can be switched on internally (see plug-in terminal)
Device address	1…150 (1)*
BCOM	
Interface/protocol	Ethernet/BCOM
Cable length	< 100 m
BCOM system name	(SYSTEM)*
BCOM subsystem address	1…255 (1)*
BCOM device address	1…255 (1)*
Modbus	
Bender Modbus image	V1, V2 (V2)*
Modbus TCP	
Interface/protocol	Ethernet/Modbus TCP
Cable length	< 100 m
Operating mode	Client for Nemder Modbus TCPdevices and „third-party devices"
Operating mode	Server for access to process image and for Modbus control commands
Parallel data access from different clients	max. 25
Modbus RTU	
Interface/protocol	RS-485/Modbus RTU
Cable length	< 1200 m
Cable	shielded, one end of shield connected to PE
recommended	CAT6/CAT7 min. AWG23
alternative	twisted pair, J-Y(St)Y min. 2x0,8
Connection	„AMB", „BMB" (see plug-in terminal)
Operating mode	master/slave (master)*
Baud rate	9.6…57.6 kBit/s
Terminating resistor	120 R (0.25 W), can be connected internally (see plug-in terminal)
Supported Modbus RTU slave addresses	2…247
PROFINET	
Interface/protocol	Ethernet/PROFINET
Operating mode	Slave (IO-Device)
SNMP	
Interface/protocol	Ethernet/SNMP
Versions	1, 2c, 3
Devices supported	Queries to all devices (channels) possible
Trap support	No
USB	
Number	2
Operating mode	USB-2.0-Host (5 V, 500 mA)
Datarate	480 Mbit/s
Cable length	< 3 m
Connection type	USB 2 Standard-A

Used ports	
53	DNS (UDP/TCP)
67, 68	DHCP (UDP)
80	HTTP (TCP)
123	NTP (UDP)
161	SNMP (UDP)
443	HTTPS (TCP)
502	MODBUS (TCP)
4840	OPCUA (TCP)
5353	MDNS (UDP)
48862	BCOM (UDP)

Technical data (continued)

Digital inputs (1…12)	
Number	12
Galvanic separation	yes
Maximum cable length	< 1000 m
Operating mode	selectable for each input: active-high or active-low
Factory setting	active-high
Voltage range (high)	AC/DC 10…30 V
Voltage range (low)	AC/DC 0…2 V
Max. Current per channel (at AC/DC 30 V)	8 mA
Connection plug-in terminal	(1-1) (2-2) (3-3)…(12-12)

Switching elements			
Number			1 relay
Operating mode			N/C operation / N/O operation
Function			programmable
Electrical endurance under rated operating conditions, number of cycles			10,000
Contact data acc. to IEC 60947-5-1:			
Utilisation category	AC-13	AC-14	DC-12
Rated operational voltage	24 V	24 V	24 V
Rated operational current	2 A	2 A	2 A
Minimum contact load (relay manufacturer's reference)			10 µA / 10 mV DC
Connection			plug-in terminal (11;12;14)

Buzzer	
Buzzer message	can be acknowledged, adoption of characteristics of new value
Buzzer interval	configurable
Buzzer frequency	configurable
Buzzer repetition	configurable

Audio	
Line IN	not used
Line OUT	Output to a STEREO playback device via 3.5 mm jack plug
Cable length	< 3 m

Device connections	
Terminal block (L1; N; PE) (for CP015 and CP924 only)	
Conductor sizes	AWG 20-12
Stripping length	10…11 mm
rigid/flexible	0.5…4 mm²
flexible with ferrule with/without plastic sleeve	0.5…4 mm²
Multiple conductor, flexible with TWIN ferrule with plastic sleeve	0.5…4 mm²
Plug-in terminal (A1/+;A2/-) (11;12;14)	
Plug-in terminal (A1/+;A2/-;PE) (11;12;14)	
Conductor sizes	AWG 24-12
Stripping length	10 mm
rigid/flexible	0.2…2.5 mm²
flexible with ferrule with/without plastic sleeve	0.25…2.5 mm²
Multiple conductor, flexible with TWIN ferrule with plastic sleeve	0.5…1.5 mm²

Plug-in terminal (l1…12), (k1…k12), (…MB), (…BMS)	
Conductor sizes	AWG 24-16
Stripping length	10 mm
rigid/flexible	0.2…1.5 mm²
flexible with ferrule without plastic sleeve	0.25…1.5 mm²
flexible with ferrule with plastic sleeve	0.25…0.75 mm²
For UL-applications (only CP907)	
Use copper conductors only.	
Minimum temperature rating of the cable to be connected to the field wiring terminals	75 °C
Minimum temperature rating of the cable to be connected to the PoE plug	80 °C

Environment/EMC	
EMC	IEC 61326-1
Operating temperature	
CP907	-10…+55 °C
CP907 for UL-Applications	-10…+50 °C
CP915	-5…+40 °C
CP924	-5…+40 °C
Range of use	≤ 2000 m AMSL
Rel. humidity	W 98 % at 25 °C
Classification of climatic conditions acc. to IEC 60721:	
Stationary use (IEC 60721-3-3)	3K22
Transport (IEC 60721-3-2)	2K11
Long-term storage (IEC 60721-3-1)	1K22
Classification of mechanical conditions acc. to IEC 60721:	
Stationary use (IEC 60721-3-3) CP907 only	3M11
Stationary use (IEC 60721-3-3) CP915 only	3M10
Transport (IEC 60721-3-2)	2M4
Long-term storage (IEC 60721-3-1)	1M12

Other	
Operating mode	continuous operation
Mounting	display-oriented
Degree of protection, front	IP54
Degree of protection, front for UL applications	IP50
Degree of protection, enclosure	IP20
Flammability class	UL 94V-0
Dimensions	
CP907 (W x H x D)	226 x 144 x 78 mm
CP915 (W x H x D)	505 x 350 x 92 mm
CP924 (W x H x D)	654 x 441 x 100 mm
Documentation number	D00349
Weight	
CP907	< 1.1 kg
CP915	< 6.1 kg
CP924	< 9.1 kg

Dimensions

External dimensions

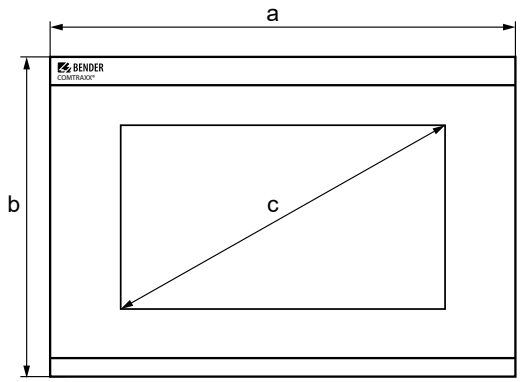

Type	Dimensions (mm)		
	a	b	c
CP907	226	144	176 (7")
CP915	505	350	386 (15,6")
CP924	654	441	610 (24")

Glass thickness 3 mm

Installation dimensions – panel cut-out

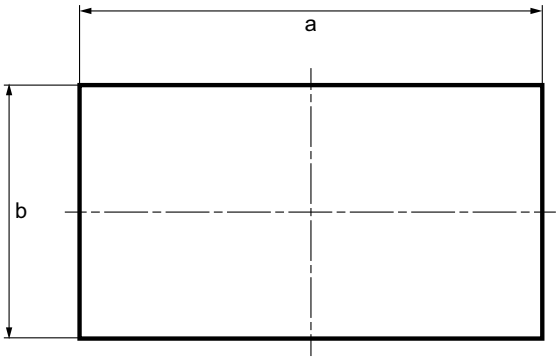

Type	Enclosure	Dimensions (mm)		Required installation depth
		a	b	
CP907	Flush-mounting	212	124	75
	Surface-mounting	299	173	–
CP915	Flush-mounting	464	309	92
CP924	Flush-mounting	613	401	95

COMTRAXX® CP305 – Control Panel

Remote alarm indicator for medical locations and other areas

Typical applications

- For medical locations and other areas

Approvals

Device features

- 5" touch screen
- Parameter setting via web server, display or Bender Connect app
- Freely programmable alarm messages
- Flush-mounting and surface-mounting version
- Easy replacement MK2007/MK2430 (retrofit)

Device variants

CP305

The CP305 is used to display visual and audible alarms. ISOMETER®s can be tested via the test function.
The CP305 can also be used as a parallel display in combination with other CP305 or CP9xx.

In the event of an alarm, the programmed alarm messages are shown on the display.

The CP305-IO features 12 digital inputs that can be freely assigned. This allows messages from third-party equipment such as battery systems or the state of medical gases to be indicated.

Any alarm message can be assigned to the inputs.

The CP305-IO has 2 additional relay outputs.

Bender Connect App

Download on the App Store

GET IT ON Google Play

Further information

For further information refer to our product range on www.bender.de.

Ordering information

Type	Description	Art. No.
CP305-IO		B95100051
CP305-C	Customised parameter settings	B22030051

Accessories

Description	Art. No.
Flush-mounting enclosure	B923710
Cavity-wall installation set for flush-mounting enclosures	B923711
CP305 surface-mounting enclosure	B95100153
CP305-IO plug kit	B95100151
Ethernet adapter kit (RJ45 socket insert, Cat.6 SLIM patch cable)	B95100152

Insulation coordination CP305 acc. to IEC 60664-1

Rated voltage	50 V
Overvoltage category	II
Pollution degree	2

Overvoltage category II and pollution degree 2 is related to the relay contacts. Further insulation coordination takes place after functional separation.

Supply via plug-in terminal (A1/+, A2/-)

Rated voltage	AC/DC 24 V
Operating range of the supply voltage	AC 18…28 V/DC 18…30 V
Nominal frequency	50/60 Hz
Typical power consumption	< 4.2 W
Maximum cable length with supply via B95061210 (24 V DC power supply unit 1.75 A)	
0.28 mm²	75 m
0.5 mm²	130 m
0.75 mm²	200 m
1.5 mm²	400 m
2.5 mm²	650 m

Stored energy time in the event of voltage failure

Time, date	Min. 2 days
Restart after power failure	Min. 2 seconds

Displays, memory

Display	5" TFT touch display (720 x 1280 px)
Displayable devices	90
Number of alarm addresses	500
Number of test addresses	50

Displays, memory

Number of history memory entries	1000

Interfaces

Ethernet

Connection	RJ45
Data rate	10/100 Mbit/s, autodetect
DHCP	on/off (on)*
IP address (1:1 connection)	169.254.xx.yy (xx and yy are unique for each device)
Netmask	nnn.nnn.nnn.nnn (255.255.255.0)*
Logs	TCP/IP, Modbus TCP, DHCP, SNTP

Modbus TCP

Interface/protocol	Ethernet/Modbus TCP
Operating mode	Slave

BMS bus

Interface/protocol	RS-485/BMS internal
Operating mode	Master/slave (master)*
Baud rate	9.6 kBit/s
Cable length	< 1200 m
Shielded cable, one end of shield connected to PE	Recommended: CAT6/CAT7 min. AWG23 Alternative: J-Y(St)Y min. 2 x 0.8
Galvanic separation	Yes
Connection	"BMS A", "BMS B" (see plug-in terminal)
Terminating resistor	120 Ω (0.25 W), can be connected internally
Device address	1…90 (1)*

Digital inputs (1…12)

Number	12
Galvanic separation	In groups of four IN 1…4 / GND 1-4 IN 5…8 / GND 5-8 IN 9…12 / GND 9-12
Relay mode	Can be selected for each input: high-active or low-active
Factory setting	Off
Voltage range (high)	AC/DC 10…30 V Nominal: 24 V
Voltage range (low)	AC/DC 0…2 V
Max. current per channel (at AC/DC 30 V)	8 mA
Connection	Plug-in terminals IN 1… 4 / GND1-4 IN 5…8 / GND 5-8 IN 9…12 / GND 9-12
Maximum cable length	< 500 m

Switching elements

Connection	Plug-in terminal K1 NC; K1 NO; K1 COM K2 NC; K2 NO; K2 COM
Number of changeover contacts	2
Operating principle (changeover contacts)	N/C operation / N/O operation
Function	Programmable
Electrical endurance under rated operating conditions	10,000 operating cycles

Contact data acc. to IEC 60947-5-1

Utilisation category	AC-13	AC-14	DC-12
Rated operational voltage	AC 24 V	AC 24 V	DC 24 V
Rated operational current	AC 2 A	AC 2 A	AC 2 A

Buzzer

Buzzer alarm	Can be acknowledged, adoption of characteristics of new value, can be muted
Buzzer interval	Configurable
Buzzer frequency	Configurable
Buzzer repetition	Configurable

Device connections

Plug-in terminal (A1/+, A2/-)

Conductor sizes	AWG 24-12
Stripping length	10 mm
Rigid/flexible	0.2…2.5 mm²
Flexible with ferrules, with/without plastic sleeve	0.25…2.5 mm²
Multiple conductor flexible with TWIN ferrule with plastic sleeve	0.5… 1.5 mm²

Plug-in terminals (BMS A, BMS B), (IN1…4, GND1…4, IN9…12, GND9…12) (IN5…8, GND5…8, K1…, K2…)

Conductor sizes	AWG 18-16
Stripping length	10 mm
Rigid/flexible	0.75…1.5 mm²
Flexible with ferrule without plastic sleeve	0.75… 1.5 mm²
Flexible with ferrule with plastic sleeve	0.75 mm²

For UL applications

Use copper lines only.	
Minimum temperature range of the cable to be connected to the plug-in terminals	75 °C

Environment/EMC

EMC	IEC 61000-6-2:2016-08 Ed. 3.0 IEC 61000-6-3:2020-07 Ed. 3.0 IEC 61326-1:2020-10 Ed. 3.0 DIN EN 61326-1:2020-10 Ed. 3.0 DIN EN 61326-1:2013-07 DIN EN 50364:2019-05 EN 300 330 V2.1.1 ETSI EN 301 489-3 V2.3.0
Operating temperature	-10…+55 °C
Operating temperature for UL applications	-10…+50 °C
Operating altitude	≤ 2000 m AMSL
Rel. humidity	≤ 98 % at 25 °C

Classification of climatic conditions acc. to IEC 60721

Stationary use (IEC 60721-3-3)	3K22
Transport (IEC 60721-3-2)	2K11
Long-term storage (IEC 60721-3-1)	1K22

Classification of mechanical conditions acc. to IEC 60721

Stationary use (IEC 60721-3-3)	3M11
Transport (IEC 60721-3-2)	2M4
Long-term storage (IEC 60721-3-1)	1M12

Other

Operating mode	Continuous operation
Mounting position	Display-oriented, adjustable horizontal/vertical display orientation
Degree of protection of front glass pane	IP66
Degree of protection of front for UL applications	IP50
Degree of protection of enclosure	IP20
Flammability class	UL 94V-0
Device dimensions (W x D x H)	181 x 96 x 37.31 mm
Documentation number	D00425
Weight	< 420 g

( )* = Factory setting

Dimension diagram CP305 (dimensions in mm)

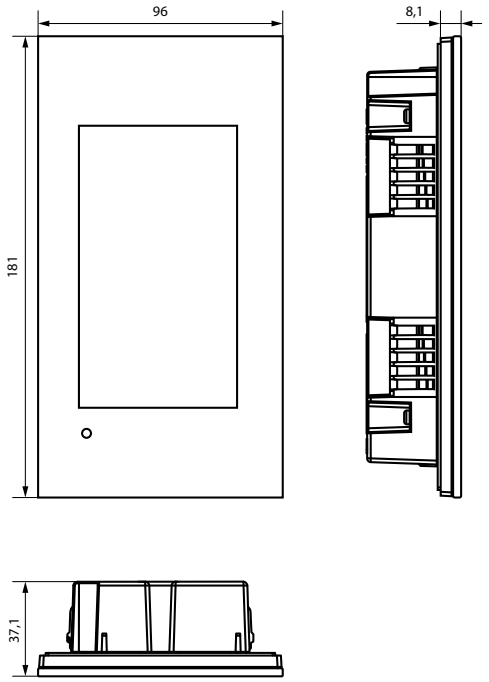

Dimension diagram flush-mounting enclosure (dimensions in mm)

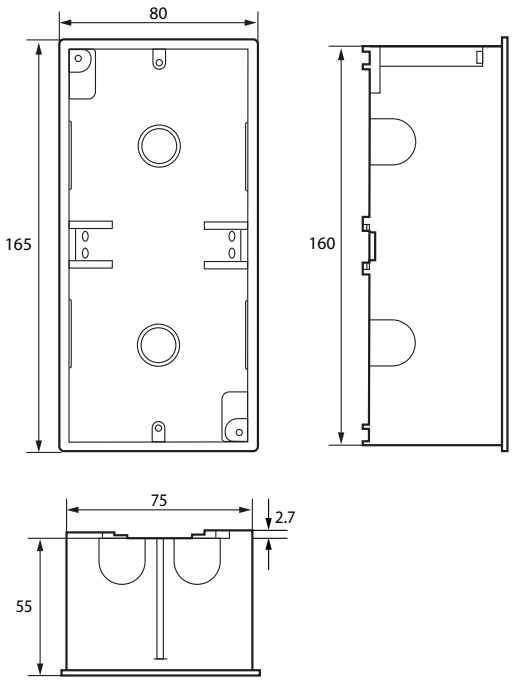

Dimension diagram surface mounting (dimensions in mm)

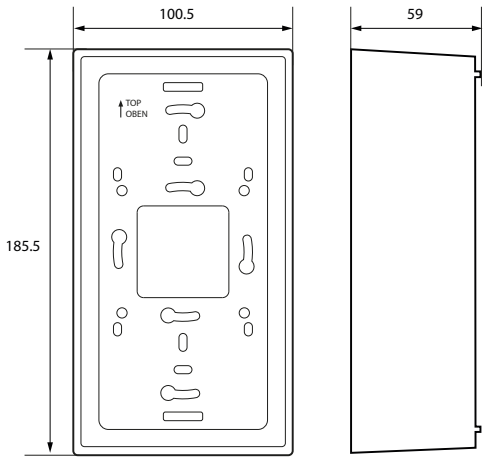

Dimension diagram cavity wall and panel mounting (dimensions in mm)

For cavity wall or panel mounting, you need the “Cavity wall mounting set” (item no. B923711).

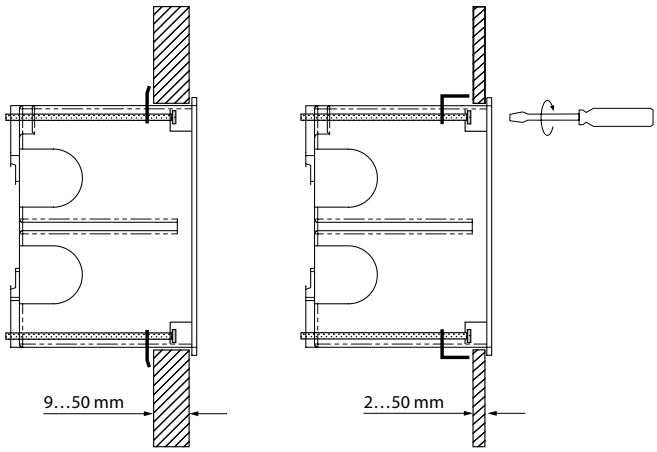

Cavity wall mounting

Panel mounting

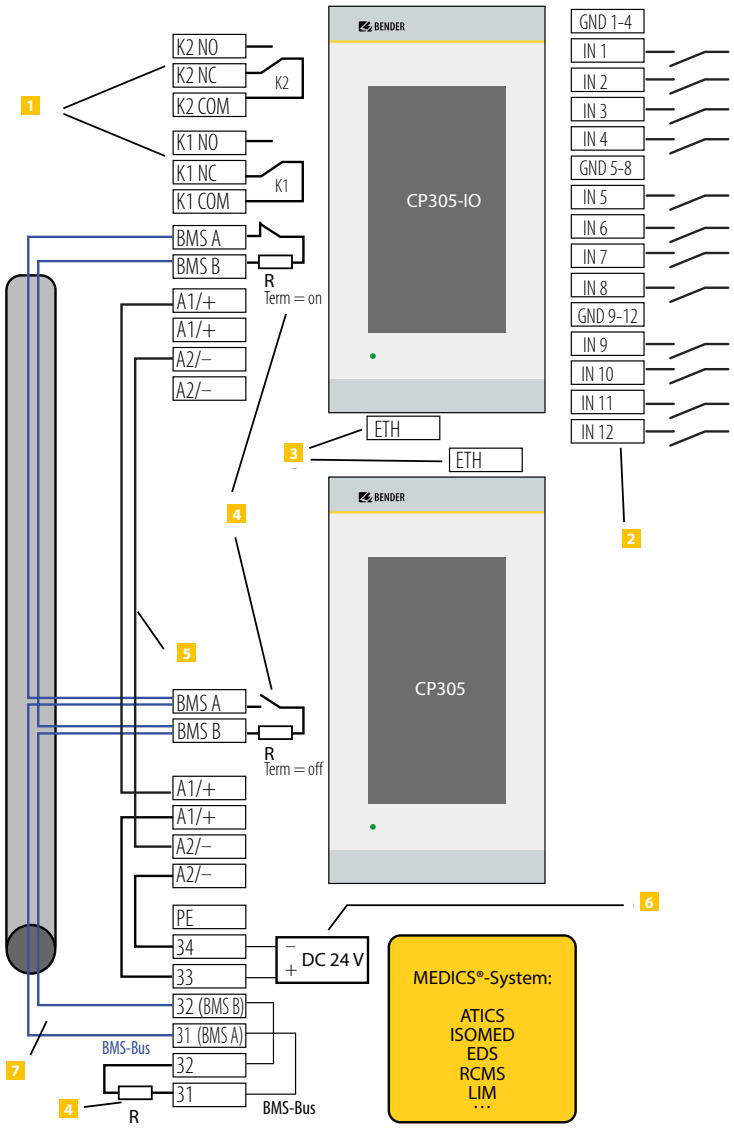

1 K…COM K…NC K…NO — **2 Relay outputs**
Parametrisable contacts for device errors, test of assigned devices*, device failure and common alarm message.

2 IN1…12 GND… — **Digital inputs**
The digital inputs are divided into three groups of four, which are galvanically separated from each other and from the device. Each group has its own GND terminal for the reference potential.
The digital inputs may be activated either via internal or external voltage or potential-free contacts. If the inputs are controlled via an external voltage, the common reference potential is connected to the "GND" terminal and the signal is connected to the respective input IN1…12.

3 ETH — **Ethernet interface** for connection to a PC
The CP305 can be integrated into the Bender/hospital network via the Ethernet interface. Parameters can be set on the PC and data as well as the history memory can be read out. Connected measuring devices can be displayed with their channels.

4 R — **BMS bus terminating resistor**
If two or more devices are connected to each other via the BMS bus, the bus line must be terminated at both ends with a resistor (R = 120 Ω). (On the CP305, the resistors can be enabled via a switch at the bottom).

5 A1+/A2- — **Supply voltage**
For the supply of the CP305 in the MEDICS® modules, observe the permissible cable lengths and cross-sections.

6 DC 24 V — **Power supply unit** in the MEDICS® module, sufficient for supplying power to max two CP305.

7 BMS A BMS B — **BMS bus connection**
Various Bender devices with a BMS bus interface can be connected to the BMS bus. Examples: ATICS®, isoMED427P, EDS151, RCMS…, CP9xx, …

* Devices without BMS bus connection, but with test input (e.g. ISOMETER®)

COMTRAXX® MK2430

Alarm indicator and test combination with LCD

Typical applications

- Visual and acoustic signalling of operating status and alarm messages
- Display of measured values and setting of limit values for monitoring purposes from BMS-capable Bender monitoring systems

Approvals

Device features

- Display of operating status, warning and alarm messages in accordance with DIN VDE 0100-710, IEC 60364-7-710 and other standards
- Backlit clear LC text display (4 x 20 characters)
- Predefined standard texts in 20 languages
- 200 freely programmable message texts
- Bus technology for easy installation and reduced fire load
- Acoustic alarm with mute function
- Parameter setting via menu (German/English)
- Suitable for flush and surface mounting
- Easy commissioning due to predefined message texts
- 12 digital inputs/1 relay output (MK2430-11 only)
- History memory with real-time clock to store 250 warning and alarm messages
- MK2418 can easily be exchanged for MK2430/MK2007

Standards

The MK2430 alarm indicator and test combination meets the requirements for installation:

- DIN VDE 0100-710 (VDE 0100 Part 710)
- IEC 60364-7-710

Further information

For further information refer to our product range on www.bender.de.

Ordering information

Type	Digital inputs/ relay output	Enclosure	Enclosure included in the scope of delivery	Art. No.
MK2430-11	12/1	Flush-mounting	✓	B95100001
MK2430-12	–			B95100002
MK2430H-12	–	Flush-mounting, horizontal mounting	–	B95100024

Accessories

Type designation	Art. No.
Parameterisation software TMK-SET	as Internet download
MK2430-mounting kit, complete	B95101000
Flush-mounting enclosure	B923710
Cavity wall installation set for flushmounting enclosure	B923711
CPx05 surface-mounting enclosure	B95100153

Suitable system components

Description	Type	Art. No.	Page
Power supply unit	AN410	B924209	**384**
	AN450	B924201	**386**

Insulation coordination acc. to IEC 60664-1

Rated insulation voltage	AC 250 V
Rated impulse withstand voltage/pollution degree	4 kV/3

Supply voltage

Supply voltage U_s	AC/DC 24 V
Frequency range U_s	0/40…60 Hz
Operating range U_s	AC 18…28/DC 18…30 V
Power consumption	≤ 3 VA
Voltage failure without reset	≤ 15 s

Displays and LEDs

Display, characters	four lines, 4 x 20 characters
Standard message texts in	20 languages
Alarm addresses configurable	150
Programmable text messages	200
History memory (messages)	250
Standard text message	3 x 20 characters
Additional text message (press button to access)	3 x 20 characters
Alarm LEDs (three different colours)	NORMAL (green), WARNING (yellow), ALARM (red)
Menu texts	German/English
Buttons	5 (Isometer test, buzzer mute, additional text, scroll, menu)

Buzzer

Buzzer message	can be acknowledged, adoption of characteristics of new value operation
Buzzer interval	configurable
Buzzer frequency	configurable
Buzzer repetition	configurable

Inputs (MK2430…-11 only)

Digital inputs	12 (IN1…IN12)
Galvanic separation	yes
Activation of the digital inputs	via potential-free contacts/extraneous voltage
Operating principle	N/O or N/C operation individually selectable for each input
Factory setting	N/O operation
Voltage range (high)	AC/DC 10…30 V
Voltage range (low)	AC/DC 0…2 V
Cable	recommended: J-Y(St)Y min. 2 x 0.8
Cable length	≤ 500 m

Interfaces

Interfaces	RS-485 and USB (V2.0/V1.1)

Technical data for the RS-485 interface:

Protocol	BMS
Baud rate	9.6 kbit/s
Cable length	≤ 1200 m
Cable (twisted in pairs, one end of shield connected to PE)	recommended: J-Y(St)Y min. 2 x 0.8
Terminating resistor	120 Ω (0.25 W) connectable via DIP switch
Device address, BMS bus	1…150
Factory setting device address	1 (master)

Programming

Interfaces	RS-485 or USB (V2.0/V1.1), USB cable: Type A plug on type B plug
Software	TMK-SET V 4.0 or higher
Factory setting password	activated

Max. cable length in case of power supply of 1/2/3 MK24.. from one AN450

0.28 mm² (e.g. J-Y(St)Y nx0.6)	160/40/– m
0.5 mm² (e.g. J-Y(St)Y nx0.8)	250/70/– m
0.75 mm²	400/100/– m
1.5 mm²	800/210/10 m
2.5 mm²	1300/360/20 m

Max. cable length in case of power supply of 1/2/3 MK24.. from one AN410

0.28 mm² (e.g. J-Y(St)Y nx0.6)	300/150/100 m
0.5 mm² (e.g. J-Y(St)Y n x 0.8)	500 /250/150 m
0.75 mm²	750/375/250 m
1.5 mm²	1500/750/500 m
2.5 mm²	2500/1200/750 m

Colours

Front foil	RAL 7035 (light grey); RAL 7040 (basalt grey)
Marking	RAL 5005 (ultramarine blue)
Front plate	RAL 7035 (light grey)

Switching elements (MK2430...-11 only)

Number	1 changeover contact
Function	programmable
Operation mode	N/C or N/O operation (programmable)
Electrical endurance, number of cycles	10000

Contact data acc. to IEC 60947-5-1

Utilisation category	AC-13	AC-14	DC-12
Rated operational voltage	24 V	24 V	24 V
Rated operational current	5 A	3 A	1 A
Minimum contact rating	1 mA at AC/DC > 10 V		

Environment/EMC

EMC immunity	DIN EN 61000-6-2
EMC emission	DIN EN 61000-6-3
Operating temperature	-5…+55 °C

Classification of climatic conditions acc. to IEC 60721:

Stationary use	3K22
Transport	2K11
Long-term storage	1K22

Classification of mechanical conditions acc. to IEC 60721:

Stationary use	3M11
Transport	2M4
Long-term storage	1M12

Connection

Connection	pluggable screw terminals

Connection properties (supply voltage, BMS bus):

Connection of single conductors	
rigid/flexible/conductor sizes	0.2…2.5/0.2…2.5 mm² (AWG 24…12)
flexible with ferrule without/with plastic sleeve	0.25…2.5/0.25…2.5 mm²
Multi-conductor connection (2 conductors of the same cross section)	
rigid/flexible	0.2…1/0.2…1.5 mm²
flexible with ferrule without plastic sleeve	0.25…1 mm²
flexible with TWIN ferrules with plastic sleeve	0.5…1.5 mm²

Connection properties (inputs):

Connection of single conductors	
rigid/flexible/conductor sizes	0.08…1.5/0.08…1.5 mm² (AWG 28…16)
flexible with ferrule without/with plastic sleeve	0.25…1.5/0.25…0.5 mm²
Multi-conductor connection (2 conductors with the same cross section):	
rigid/flexible	0.08…0.5/0.08…0.75 mm²
flexible with ferrules without plastic sleeve	0.25…0.34 mm²
flexible with TWIN ferrules with plastic sleeve	0.5 mm²
Stripping length	7 mm
Tightening torque	0.5…0.6 Nm

Other

Operating mode	continuous operation
Mounting	display-oriented
Degree of protection (DIN EN 60529	IP50 (surface-mounting type: IP54)
Degree of protection (DIN EN 60529)	IP20
Flammability class	UL94V-0
Documentation number	D00129
Weight	flush mounting ≤ 210 g, surface mounting ≤ 400 g

Dimension diagram (dimensions in mm)

Flush-mounting type

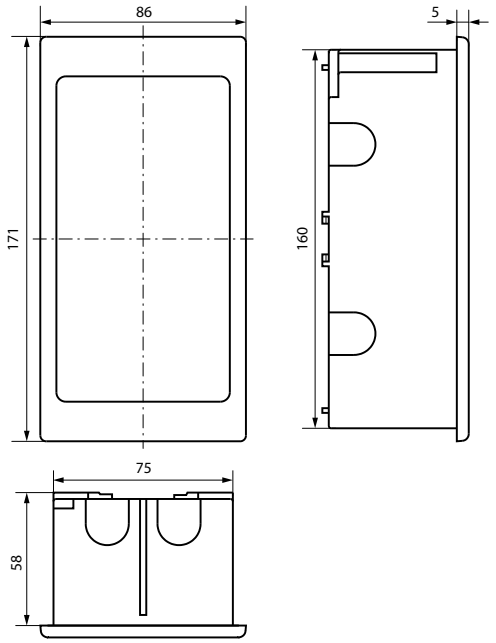

Surface-mounting type

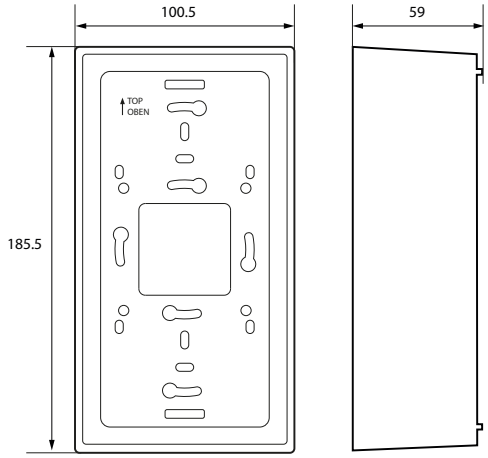

Wiring diagram

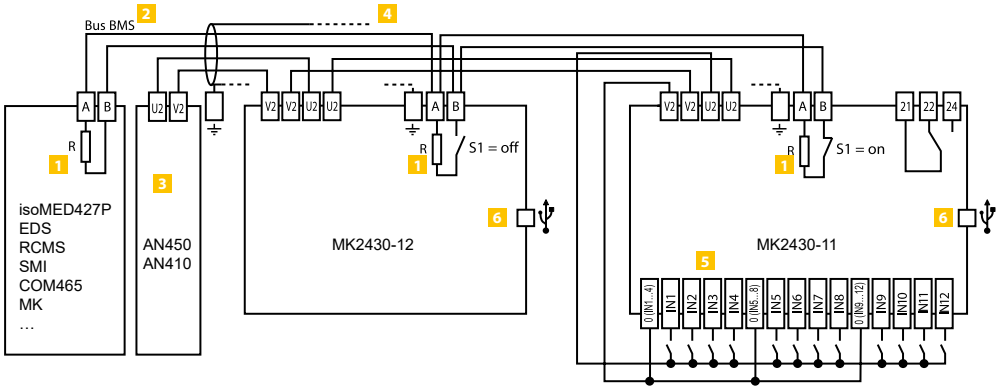

1 Terminating resistor BMS bus (120 Ω)

2 Connection BMS bus

3 Power supply unit incorporated in the MEDICS® module, sufficient for supplying power to maximum three MK2430

4 Cable between MEDICS® module and MK2430

When the MK2430 is supplied by the AN410 or AN450 power supply unit in the MEDICS® modules, the permissible cable lengths and cable cross sections have to be considered.

5 Digital inputs

The digital inputs may be controlled either via potential-free contacts or via voltage signals. If you are using potential-free contacts, the voltage can be drawn from the AN410 or AN450 (3).

When the inputs are activated via an external voltage, the common 0(-) is connected to terminal 0 and the 1(+)-signal is connected to the respective input IN1…IN12. In this case, the connections between the terminals 0 and V2 and the common connections and U2 are not required.

6 USB connection for programming purposes

Visualisation

Typical applications

- Visualisation of Bender systems

Device features

- Graphical representation on a screen showing the design and status of Bender systems, e.g. in the form of an outline view or a circuit diagram
- Localising and identifying faults easier and faster
- Display of operating messages, alarm messages and currently measured values
- Displaying and analysing historical data
- Viewing and operating from remote computers
- Display and operation via the gateway COM465IP option D by means of a browser and a personal computer in the network.
- Individually programmed visualisation on a touch panel PC or a PC

Our service range:

Bender offers you the following solution package:

- Bender gateway to connect your Bender system to a computer
- Touch panel computer and/or computer with monitor for displaying the visualisation solution
- Customer-specific programming of the visualisation solution using a high-performance software
- On-site setting and testing of the visualisation

Your advantages:

- Continuous overview of the system at any place
- Faults can be detected easily and hence remedied faster
- Correlations can be recognised and faults can be avoided in the future

Further information

For further information refer to our product range on www.bender.de.

POWERSCOUT®

Recognising connections – optimising maintenance

Device features

- Transmission of measured values every minute
- Resolution of the data as a function of the velocity of the bus system
- 16 visible dashboards
- 256 public dashboards
- Commissioning wizards
  - Residual current
  - Stray currents
  - Neutral conductor
  - Central earthing point
- Dashboard management
- Tree views management
- Report management
- Automated sending of reports
- Integration via CP9xx(-I), COM465IP and COM465DP
- Integration of third-party devices
- A web-based application for all types of devices
- Languages
  - English
  - German
- User management
- Supported browsers
  - Chrome
  - Firefox
  - Internet Explorer

Typical applications

- ***Commissioning wizards***
  The wizards support the user in generating dashboards and reports. With just a few steps, meaningful dashboards related to a specific subject of electrical safety can be generated.
- ***Residual current***
  The commissioning wizard supports you in creating a dashboard that allows evaluating the level of the residual current at a glance. The ratio of residual current and load current is calculated.
- ***Stray currents***
  The wizard for stray currents indicates the system parts where excessive stray currents exist.
- ***Central earthing point***
  The central earthing point wizard generates a meaningful visualisation for the user by querying the current at the CEP and the corresponding phase current.
- ***Neutral conductor***
  The excessive load on the neutral conductor challenges many system operators. The commissioning wizard evaluates the neutral currents and indicates whether they are too high.

Further information

For further information refer to our product range on www.bender.de.

Overview price model

Model	Type	Collectors (gateways)	User	Art. No.
Hosted	POWERSCOUT 2	up to 2	10	B95061500
	POWERSCOUT 5	up to 5	20	B95061501
	POWERSCOUT 10	up to 10	40	B95061502
	POWERSCOUT project	> 10	> 40	B95061503

If you choose the Hosted model, we will operate POWERSCOUT for you in a German data centre.
We take care of updates and maintenance for you.

System architecture

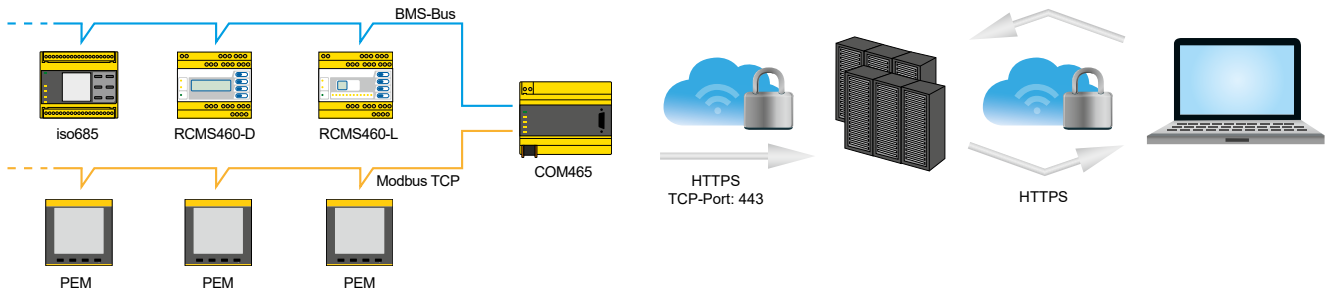

ATICS®, the worldwide safest and most compact all-in-one changeover and monitoring device

for safety-relevant and medical locations

Safe

Functional safety SIL2 according to IEC 61508
guarantees protection against malfunction hazards

Continuous self monitoring
of electronic system and circuit paths with automatic notification

Preventive safety
by automatic reminders for prescribed tests

Maximum reliability during changeover

- Patented changeover system with mechanical and electrical interlock
- Weld-free switching contacts with circuit breaker mechanism
- Insensitive to voltage fluctuations or shocks, for example, due to stable operating position and constant contact pressure
- Monitoring for short circuits

Easy-to-use

Easy to operate and perfect overview
due to clear menu structure and user guidance

Correct information at the correct time
due to clear messages via an illuminated graphic display and via bus

Safe manual changeover during service
due to integrated manual/automatic mode with mechanical restart interlock

Complete documentation of events

- Changeover procedures
- Testing
- Parameter changes

External functional test or replacement without service interruption
by optional bypass switch

Compact

Compact design
of electronic system and switching elements in one enclosure

Changeover, IT system monitoring and locating current injector
in one device

Simple wiring
due to integrated design

Completely pluggable

Efficient

Small space required

Tests according to the regulations without interruption of the power supply

Easy integration into existing installations

Device overview ATICS® switchover and monitoring devices

			
		ATICS®-…-ISO	**ATICS®-…-DIO**
Catalogue page		**426**	**430**
Application		Unearthed safety power supplies	Safety power supplies
Rated insulation voltage		2-pole: 250 V	2-pole: 250 V 4-pole: 400 V
Voltages	**Nominal system voltage U_n**	AC 230 V (AC 160…276 V)	2-pole: AC 230 V 4-pole: 3N AC 400/230 V
	Frequency range	48…62 Hz	48…62 Hz
Insulation monitoring Measuring range		10 kΩ…1 MΩ	–
Insulation monitoring Response value R_{an1}		50…500 kΩ	–
Digital inputs/relays		1/1	4/4
Interface/protocol		RS-485/BMS	RS-485/BMS
Connection	**Pluggable screw terminals**	✓	✓ (up to 125 A)
	Screw terminals	–	✓ (160 A)
Installa-tion	**DIN rail**	✓	✓
	Screw mounting	4 x M5	6 x M5
Product details (Products on www.bender.de/en)			

ATICS®-…-ISO

Automatic transfer switching devices with monitoring function for unearthed safety power supplies

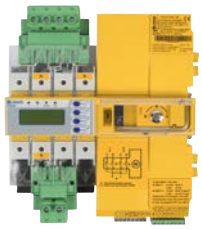

Typical applications

- Design of safety power supplies in group 2 medical locations, e.g.
  - intensive care unit
  - operating theatres
- Retrofit

Approvals

Device features

Perfectly suitable for space-saving installation/retrofitting

- Compact device for easy setup of safety power supplies with functional safety in accordance with DIN EN 61508 (SIL 2) e.g. for group 2 medical locations in compliance with DIN VDE 0100-710 (VDE 0100-710)/IEC 60364-7-710
- Increased safety and availability by integrating changeover and IT system monitoring in one compact device
- All-in-one: Integration of switch disconnector, control and monitoring electronics for unearthed safety power supplies
- Solutions for any application

Convenient installation and commissioning

- Saves time and money

Safe operation

- Robust switch disconnector contacts
- Mechanical locking
- Manual operation directly on the device
- Functional safety SIL 2
- Certification by TÜV SÜD in accordance with EN 61508 (VDE 0803) SIL 2 and DIN VDE 0100-710 (VDE 0100-710)

Uninterrupted maintenance

- Plug connectors and optional bypass switch
- Excellent communication and parameterisation options

Standards

The transfer switching device conforms to the following standards:

- DIN VDE 0100-710 (VDE 0100-710)*
- DIN VDE 0100-718 (VDE 0100-718)
- ÖVE/ÖNORM E 8007
- IEC 60364-7-710*
- DIN EN 61508-1 (VDE 0803-1)*
- IEC 61508-1 (2010-04) Ed. 2.0*
- DIN EN 61508-2 (VDE 0803-2)*
- IEC 61508-2 (2010-04) Ed. 2.0*
- DIN EN 61508-3 (VDE 0803-3)*
- IEC 61508-3 (2010-04) Ed. 2.0*
- DIN EN 60947-6-1 (VDE 0660-114)
- IEC 60947-6-1 (2013-12) Ed. 2.1
- DIN EN 61557-8 (VDE 0413-8)

Standard-compliant isolating transformer monitoring according to:

- DIN EN 61558-1 (VDE 0570-1)
- DIN EN 61558-1/A1 (VDE 0570-1/A1)

The standards marked with * were part of the test conducted by TÜV Süd.

Further information

For further information refer to our product range on www.bender.de.

Ordering information

Type	Rated operational current I_e	Rated operational voltage U_e	Art. No.
ATICS-2-63A-ISO	AC 63 A	AC 240 V	B92057202
ATICS-2-63A-ISO-ES*			B92057206
ATICS-2-63A-ISO-400		AC 415 V	B92057204
ATICS-2-80A-ISO	AC 80 A	AC 240 V	B92057203
ATICS-2-80A-ISO-ES*			B92057207
ATICS-2-80A-ISO-400		AC 415 V	B92057205

* with connection option for ATICS-ES energy storage device.

Accessories

Description	Rated operational current I_e	Type	Art. No.
Bypass switch kit	AC 63 A	ATICS-BP-2-63A-SET	B92057252
	AC 80 A	ATICS-BP-2-80A-SET	B92057253
Energy storage for ATICS®	–	ATICS-ES*	B92057255

* ATICS-ES may only be used in combination with the following ATICS® transfer switching devices: B92057206, B92057207.

Suitable system components

Description	Type	Art. No.	Page
Insulation fault locator	EDS151	B91080101	**147**

Technical data

Insulation coordination acc. to IEC 60664-1/IEC 60664-3

Overvoltage category	III
Pollution degree outside, inside	2
Rated insulation voltage	250 V
Protective separation between	line 1 – line 2; line 1, 2, 3 – RS-485 line 1, 2, 3 – digital inputs; line 1, 2, 3 – relay outputs
Voltage test according to IEC 61010-1 (basic insulation/protective separation)	2.21 kV/3.54 kV

Supply voltage

Rated operational voltage U_e	230 V, 50/60 Hz
Supply voltage U_S	see ordering details
Power consumption at 63 A	≤ 16 W
Power consumption at 80 A	≤ 28 W
Current during changeover process	17 A/< 30 ms

Power section/switching elements

Nominal system voltage U_n	refer to ordering details
Frequency range f_n	48…62 Hz
Crest factor	≤ 1.2
Number of switching cycles (mechanical)	≥ 8000
Short circuit current I_{cc} and fuses	refer to the manual, table "Utilisation category acc. to DIN EN 60947"

Voltage monitoring/changeover

Frequency range f_n	40…70 Hz
Undervoltage response value (Alarm 1)	160…207 V (1-V steps)
Overvoltage response value (Alarm 2)	240…275 V (1-V steps)
Response delay t_{on}	50 ms…100 s (resolution of setting starting 50 ms)
Delay on release t_{off}	200 ms…100 s (resolution of setting starting 50 ms)
Hysteresis	2…10 % (1-% steps)
Frequency measurement	40…70 Hz (resolution 0.1 Hz)
Display range measured value	20…300 V
Operating uncertainty	±1 %
Change over period	t <500 ms…100 s

Current monitoring (output current)

Measuring current transformers	STW3, STW4
Measuring range In (TRMS)	STW3: 0…> 150 A, STW4: 0…> 260 A
Response value for short-circuit detection ATICS-ISO (versions 63 A and 80 A) with STW3	130 A
Crest factor	min. 2
Hysteresis for short-circuit alarm	5 %
Cable length:	
Single wire ≥ 0.75 mm²	0…1 m
Single wire, twisted ≥ 0.75 mm²	1…10 m
Shielded cable	10…40 m
Cable: twisted pairs, shield to terminal 1 at one end, must not be earthed	recommended: J-Y(St)Y min. n x 2 x 0.8

IT system monitoring

Insulation monitoring

Nominal system voltage (operating range)	230 V 50/60 Hz (80…275 V)
Measuring range	10 kΩ…1 MΩ
Measurement method	AMP (adaptive measuring pulse)
Response value R_{an1} (ALARM 1)	50…250 kΩ
Relative uncertainty	±15 %
Hysteresis	≤ 25 %
Response time t_{an} at $R_F = 0.5 \times R_{an}$ and $C_e = 1$ µF	≤ 5 s
Measuring voltage U_m	DC 12 V
Measuring current I_m (at $R_F = 0$ Ω)	≤ 53 µA
Internal resistance R_i	≥ 240 kΩ
Impedance Z_i	≥ 220 kΩ
Internal resistance/impedance during test	≥ 100 kΩ
Permissible extraneous DC voltage U_{fg}	≤ DC 370 V
Permissible system leakage capacitance C_e	≤ 5 µF
Automatic self test	every hour
Response time for loss of earth connection as well as loss of network connection	maximum 1 hour

Load current monitoring (IT system transformer)

Measuring current transformers	STW2, STW3, SWL-100 A
Measuring range IL (TRMS)	10…110 % of the response value
Adjustable response value (STW2, STW3, SWL-100A)	5…(50) 100 A (1-A steps)
Relative uncertainty	±5 %
Crest factor	≤ 2
Response time	< 1 s
Response delay ton	0…100 s (step-by-step in 1-s steps)
Delay on release toff	0…100 s (step-by-step in 1-s steps)
Hysteresis	5…30 %
Response time CT connection monitoring	approx. 1 h (or immediately in case of "TEST Isometer")
Cable length:	
Single wire ≥ 0.75 mm²	0…1 m
Single wire, twisted ≥ 0.75 mm²	1…10 m
Shielded cable 0.5 mm²	10…40 m
Cable: twisted pairs, shield to terminal 1 at one end, must not be earthed	recommended: J-Y(St)Y min. n x 2 x 0.8

Temperature monitoring (IT system transformer)

Response value	4 kΩ
Relative uncertainty	±10 %
Release value	1.6 kΩ
Response time (overtemperature or open-circuit temperature sensor)	≤ 2 s
PTC resistors acc. to DIN 44081	max. 6 in series

Insulation fault location

Test current I_T	< 1 mA
Test cycle/pause	2/4 s

Displays and data memory

Display: graphic display	languages DE, EN, FR
Alarm LEDs	line 1, line 2, alarm, com
History memory	500 data records
Data logger	500 data records/channel
Config. logger	300 data records
Test logger	100 data records
Service logger	100 data records

Input

Digital inputs	1
Galvanic separation	yes
Control	via potential-free contacts
Mode of operation	active at 0 V (low) or 24 V (high), adjustable
Voltage range high/low	AC/DC 10…30 V/AC/DC 0…0.5 V
Adjustable function	switching back interlocking function, manual/automatic mode, bypass operation, function test, changeover of the preferred line, alarm input for operating theatre lights, alarm input for other devices

Output

Switching element	1 potential-free changeover contact
Mode of operation adjustable	N/O or N/C operation
Adjustable function	refer to the manual, settings menu 5: "Relay"
Electrical endurance under rated operating conditions, number of cycles	10 000

Contact data according to IEC 61810

Rated operational current AC (resistive load, cos φ=1)	5 A/AC 250 V
Rated operational current DC	5 A/DC 30 V
Overvoltage category	III
Minimum contact rating	10 mA at DC > 5 V

BMS interface

Interface/protocol	RS-485/BMS
Baud rate	9.6 kbit/s
Cable length	≤ 1200 m
Cable (twisted pairs, shielded, shield connected to PE on one side)	recommended: J-Y(St)Y min. n x 2 x 0.8
Terminating resistor	120 Ω (0.25 W)
Device address, BMS bus	2…90

Environment/EMC

EMC	EN 61326 (see CE declaration)

Classification of climatic conditions acc. to IEC 60721:

Stationary use (IEC 60721-3-3)	3K24 (except condensation and formation of ice)
Transport (IEC 60721-3-2)	2K11
Long-term storage (IEC 60721-3-1)	1K22
Operating temperature	-25…+55 °C

Classification of mechanical conditions acc. to IEC 60721:

Stationary use (IEC 60721-3-3)	3M11
Transport (IEC 60721-3-2)	2M4
Long-term storage (IEC 60721-3-1)	1M12

Dimension diagram (dimensions in mm)

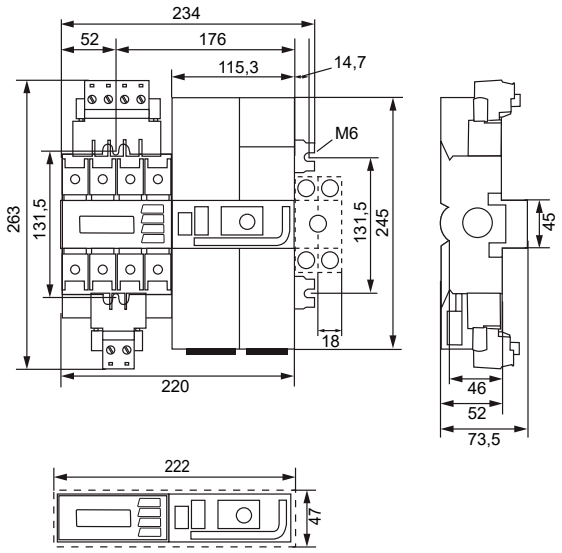

Terminals

Power section

Connection directly on ATICS®, for plug connections	screw-type terminals
rigid (flexible)/conductor sizes	10…70 mm² (6…50 mm²)/8 (10)…0 AWG
Stripping length	15 mm
Tightening torque (hexagon socket 4 mm)	5 Nm
Connection type	pluggable screw-type terminals
Conductor cross section, rigid min/max	1.5/35 mm²
Conductor cross section, flexible min/max	1.5 mm²/25 mm²
Conductor cross section AWG/min/max	20/2
Stripping length (do not use ferrules)	20 mm
Tightening torque (Torx® screwdriver T20 or slotted screwdriver 6.5 x 1.2 mm)	2.5 Nm (≤ 25 mm²) 4.5 Nm (≥ 25 mm²)
Torque setting for manual operation (Allen 5 mm)	approx. 6 Nm

Electronics

Connection	screw-type terminals
rigid/flexible/conductor sizes	0.14…1.5 mm²/28…16 AWG
Stripping length	7 mm
Tightening torque (slotted screws, screwdriver 2.5 x 0.4 mm)	0.22…0.25 Nm

Other

Operating mode	continuous operation
Mounting	display-oriented
Operating altitude up to a maximum of	2000 m AMSL
Protection class	Class I
Protection class LCD under foil (DIN EN 60529)	IP40
Enclosure material	polycarbonate
Flammability class	UL94V-0
DIN rail mounting	acc. to IEC 60715
Screw mounting	4 x M5
Dimensions incl. terminals (W x H x D)	234 x 270 x 73
Documentation number	D00046
Weight	approx. 3400 g

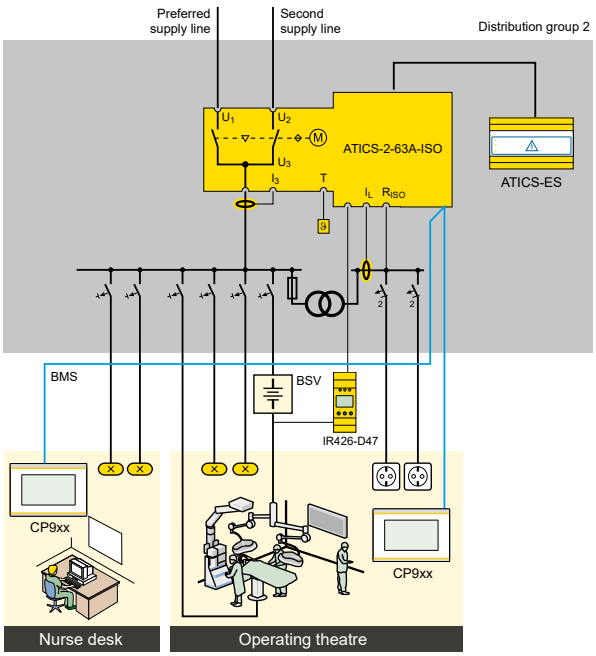

Application example operating theatre

- ATICS®-2-63A-ISO: Changeover between the preferred and the redundant line while monitoring the medical IT system with transformer load and temperature monitoring
- IR426-D47: Monitoring of the operating theatre light IT system (optional)
- MK2430/CP9xx: Alarm at at least two points with independent power supplies for functional safety
- ATICS-ES: Energy storage (B92057206, B92057207 only)

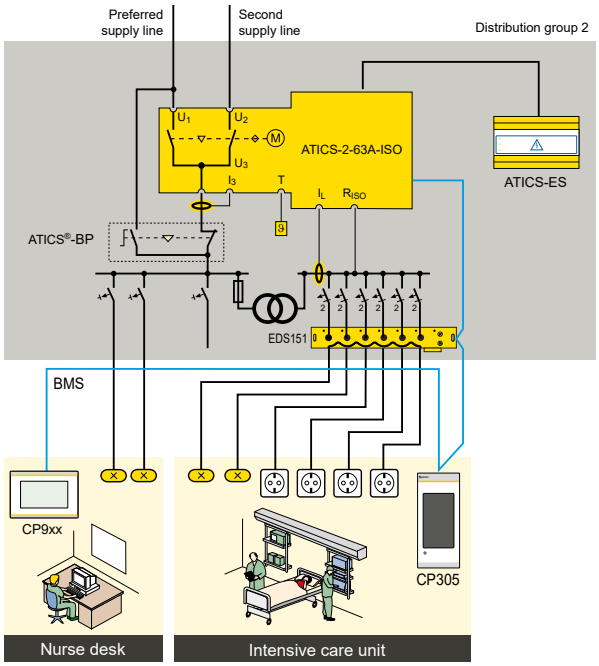

Example intensive care unit

- ATICS®-2-63A-ISO: Changeover between the preferred and the redundant line while monitoring the medical IT system with transformer load and temperature monitoring
- EDS151: Insulation fault locator or fast insulation fault localisation (recommended)
- ATICS®-BP: Bypass switch for uninterrupted test/maintenance (recommended)
- MK: Alarm at at least two points with independent power supplies for functional safety
- ATICS-ES: Energy storage (B92057206, B92057207 only)

ATICS®-…-DIO

Automatic transfer switching devices for safety power supplies

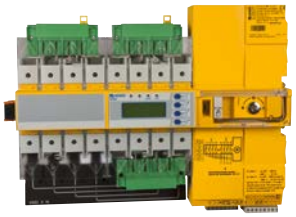

Typical applications

- Design of safety power supplies, e.g. for
  - main distribution boards
  - computing centres
  - industry
- Retrofit

Approvals

Device features

Perfectly suitable for space-saving installation/retrofitting

- Compact device for designing safety power supplies with functional safety more easily, in accordance with DIN VDE 61508 (SIL 2), in computing centres, industry, or in group 2 medical locations in accordance with DIN VDE 0100-710 (VDE 0100-710)/IEC 60364-7-710
- All-in-one: Integration of switch disconnector and control electronics
- Compact design
- Solutions for any application

Convenient installation and commissioning

- Saves time and money

Safe operation

- Switch disconnector contacts of robust design
- Mechanical locking
- Manual operation directly on the device
- Functional safety SIL 2
- Certification by TÜV SÜD

Uninterrupted maintenance

- Plug connectors and optional bypass switch
- Excellent communication and parameterisation options

Standards

The transfer switching device conforms to the following standards:

- DIN VDE 0100-710 (VDE 0100 Part 710)*
- DIN VDE 0100-718 (VDE 0100-718)
- ÖVE/ÖNORM E 8007
- IEC 60364-7-710*
- DIN EN 61508-1 (VDE 0803-1)*
- IEC 61508-1 (2010-04) Ed. 2.0*
- DIN EN 61508-2 (VDE 0803-2)*
- IEC 61508-2 (2010-04) Ed. 2.0*
- DIN EN 61508-3 (VDE 0803-3)*
- IEC 61508-3 (2010-04) Ed. 2.0*
- DIN EN 60947-6-1 (VDE 0660-114)
- IEC 60947-6-1 (2013-12) Ed. 2.1

Standard-compliant isolating transformer monitoring according to:

- DIN EN 61558-1 (VDE 0570-1)
- DIN EN 61558-1/A1 (VDE 0570-1/A1)

The standards marked with * were part of the test conducted by TÜV Süd.

Further information

For further information refer to our product range on www.bender.de.

Ordering information ATICS®…-DIO 2-pole

Type	Version	Rated operational current I_e	Scope of delivery	Art. No.
ATICS-2-63A-DIO	2-pole	AC 63 A	1 x STW3, bridge, connectors, terminal cover	B92057212
ATICS-2-80A-DIO		AC 80 A	1 x STW3, bridge, connectors, terminal cover	B92057213
ATICS-BP-2-63A-SET	Bypass switch set	AC 63 A	Bridge, terminal cover, auxiliary contacts, LEDs green/red	B92057252
ATICS-BP-2-80A-SET		AC 80 A	Bridge, terminal cover, auxiliary contacts, LEDs green/red	B92057253

Ordering information ATICS®…-DIO 4-pole

Type	Version	Rated operational current I_e	Scope of delivery	Art. No.
ATICS-4-80A-DIO	4-pole	AC 80 A	4 x STW3, bridge, connectors, terminal cover	B92057222
ATICS-4-125A-DIO		AC 125 A	4 x STW4, bridge, connectors, terminal cover	B92057223
ATICS-4-160A-DIO		AC 160 A	4 x STW4, bridge, terminal cover	B92057224
ATICS-BP-4-80A-SET	Bypass switch set	AC 80 A	Bridge, terminal cover, auxiliary contacts, LEDs green/red	B92057260
ATICS-BP-4-125A-SET		AC 125 A	Bridge, terminal cover, auxiliary contacts, LEDs green/red	B92057262
ATICS-BP-4-160A-SET		AC 160 A	Bridge, terminal cover, auxiliary contacts, LEDs green/red	B92057264

Technical data

Insulation coordination acc. to IEC 60664-1/IEC 60664-3

Overvoltage category	III
Pollution degree outside, inside	2
Rated insulation voltage ATICS-2-DIO/ATICS-4-DIO	250 V/400 V
Protective separation between	Line 1 – Line 2; Line 1, 2, 3 – RS-485 Line 1, 2, 3 – digital inputs; Line 1, 2, 3 – relay outputs
Voltage test according to IEC 61010-1 (basic insulation/protective separation)	2.21 kV/3.54 kV

Supply voltage

Rated operational voltage U_e	230 V 50/60 Hz
Supply voltage U_S	from monitored system
Power consumption ATICS-2-63A-DIO	≤ 16 W
Power consumption ATICS-2-80A-DIO	≤ 23 W
Power consumption ATICS-4-80A-DIO	≤ 39 W
Power consumption ATICS-4-125A-DIO	≤ 87 W
Power consumption ATICS-4-160A-DIO	≤ 119 W
Current during the changeover process	17 A/< 30 ms

Power section/switching elements

Nominal system voltage U_n (operating range) ATICS-2-DIO/ATICS-4-DIO	AC 230 V/3NAC 400 V
Frequency range f_n	48…62 Hz
Crest factor	≤ 1.2
Number of switching cycles (mechanical)	≥ 8000
Short-circuit currents	see table "Short-circuit currents" in manual
Short-circuit current I_{cc} and fuses	refer to table "Utilisation category acc. to DIN EN 60947" in manual

Voltage monitoring/changeover

Frequency range f_n	40…70 Hz
Undervoltage response value (Alarm 1)	160…207 V (1-V steps)
Overvoltage response value (Alarm 2)	240…275 V (1-V steps)
Response delay t_{on}	50 ms…100 s (resolution of setting starting 50 ms)
Delay on release t_{off}	200 ms…100 s (resolution of setting starting 50 ms)
Hysteresis	2…10 % (1-% steps)
Frequency measurement	40…70 Hz (resolution 0.1 Hz)
Display range measured value ATICS-2-DIO	20…276 V
Display range measured value ATICS-4-DIO	20…520 V
Operating uncertainty	±1 %
Change over period	t <500 ms…100 s

Current monitoring (output current)

Measuring current transformers	STW3, STW4
Measuring range I_n (TRMS)	STW3: 0…> 150 A, STW4: 0…> 260 A
Response value for short-circuit detection ATICS-DIO	
(versions 63 A and 80 A) with STW3	130 A
(versions 125 A and 160 A) with STW4	250 A
Crest factor	min. 2
Hysteresis for short-circuit alarm	5 %

Cable length:

Single wire ≥ 0.75 mm²	0…1 m
Single wire, twisted ≥ 0.75 mm²	1…10 m
Shielded cable	10…40 m
Cable: twisted pairs, shield to terminal l at one end, must not be earthed	recommended: J-Y(St)Y min. n x 2 x 0.8

Displays and data memory

Display: graphic display	languages DE, EN, FR, PL
Alarm LEDs	Line 1, Line 2, Alarm, Com
History memory	500 data records
Data logger	500 data records/channel
Config. logger	300 data records
Test data logger	100 data records
Service logger	100 data records

Input

Digital inputs	4
Galvanic separation	yes
Control	via potential-free contacts
Mode of operation	active at 0 V (low) or 24 V (high), adjustable
Voltage range high/low	AC/DC 10…30 V/AC/DC 0…0.5 V
Adjustable function	switching back interlocking function, manual/automatic mode, bypass mode, functional test, changeover to the preferred line, alarm input for operating theatre lights, alarm input for other devices

Relay output 1

Switching element	1 potential-free changeover contact
Mode of operation adjustable	N/O or N/C operation
Adjustable function	see "Settings menu 4: Relay" in manual
Electrical endurance under rated operating conditions, number of cycles	10,000

Contact data according to IEC 61810

Rated operational current AC (resistive load, cos φ=1)	5 A/AC 250 V
Rated operational current DC	5 A/DC 30 V
Overvoltage category	III
Minimum contact rating	10 mA at DC > 5 V

Relay outputs 2…4

Switching element	1 potential-free N/O contact
Mode of operation adjustable	N/O or N/C operation
Adjustable function	see "Settings menu 4: Relay" in manual
Electrical endurance under rated operating conditions, number of cycles	80,000

Contact data according to IEC 61810

Rated operational current AC (resistive load, cos φ=1)	5 A/AC 150 V
Rated operational current DC	5 A/DC 30 V
Overvoltage category	III
Minimum switching capacity	120 mW

BMS interface

Interface/protocol	RS-485/BMS
Baud rate	9.6 kbit/s
Cable length	≤ 1200 m
Cable: shielded, one end of shield connected to PE	CAT6/CAT7 min. AWG23*
* alternatively	twisted pair, one end of shield connected to PE J-Y(St)Y min. 2x0.8
Terminating resistor	120 Ω (0.25 W)
Device address, BMS bus	2…90

Environment/EMC

EMC	EN 61326 (see CE declaration)

Classification of climatic conditions according to IEC 60721:

Stationary use (IEC 60721-3-3)	3K24 (except condensation and formation of ice)
Transport (IEC 60721-3-2)	2K11
Long-term storage (IEC 60721-3-1)	1K22
Operating temperature	-25…+55 °C

Classification of mechanical conditions acc. to IEC 60721:

Stationary use (IEC 60721-3-3)	3M11
Transport (IEC 60721-3-2)	2M4
Long-term storage (IEC 60721-3-1)	1M12

Terminals

Power section

Connection directly on ATICS®, for plug connections and connection of 160 A version	screw-type terminals
rigid (flexible)/conductor sizes	10…95 mm² (6…70 mm²)/8 (10)…000 (00) AWG
Stripping length	15 mm
Tightening torque (hexagon socket 4 mm)	5 Nm
Connection type (up to 125 A)	pluggable screw terminals
Conductor cross section, rigid min./max	1.5/35 mm²
Conductor cross section, flexible min./max.	1.5/25 mm²
Conductor cross section AWG/min./max	16/2
Stripping length (without ferrules)	20 mm
Tightening torque (Torx® screwdriver T20 or slotted screwdriver 6.5 x 1.2 mm)	2.5 Nm (≤ 25 mm²) 4.5 Nm (≥ 25 mm²)
Torque setting for manual operation (Allen 5 mm)	approx. 6 Nm

Electronics

Connection	pluggable screw-type terminalsterminals
rigid/flexible/conductor sizes	0.14…1.5 mm²/28…16 AWG
Stripping length	7 mm
Tightening torque (slotted screws, screwdriver 2.5 x 0.4 mm)	0.22…0.25 Nm

Other

Operating mode	continuous operation
Mounting	display-oriented
For use at altitudes	up to 2000 m AMSL
Protection class	Class I
Protection class LCD under foil (DIN EN 60529)	IP40
Enclosure material	polycarbonate
Flammability class	UL94V-0
Mounting	DIN rail acc. to IEC 60715
Screw mounting	4 x M5
Dimensions incl. terminals (W x H x D)	234 x 270 x 73
Documentation number	D00080
Weight	
ATICS-2-DIO	approx. 3400 g
ATICS-4-DIO	approx. 4800 g

Dimension diagrams (dimensions in mm)

2-pole

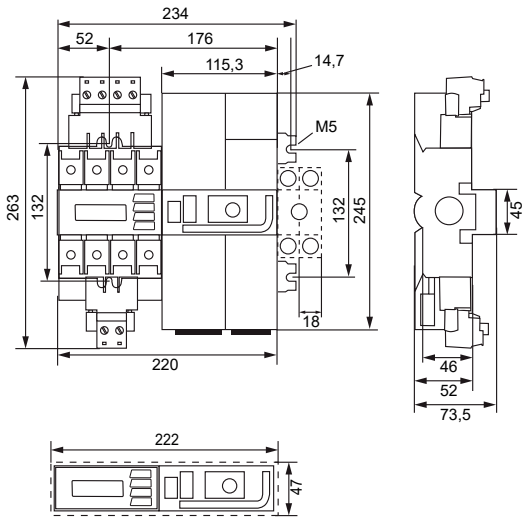

4-pole

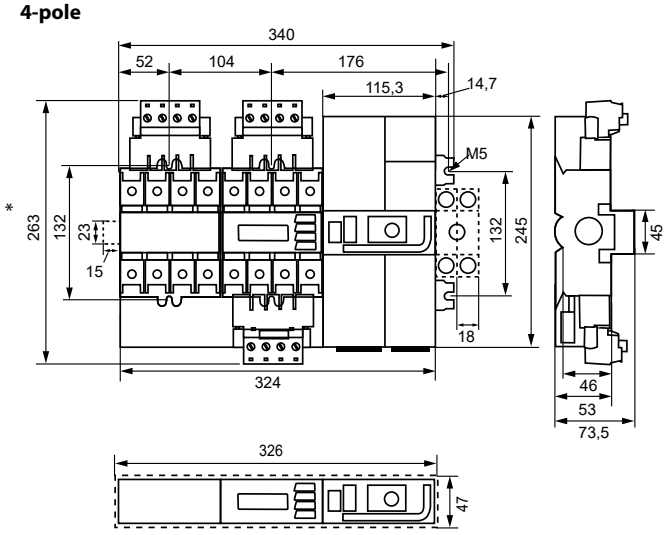

* Version 80 A/125 A. Version 160 A without connectors.

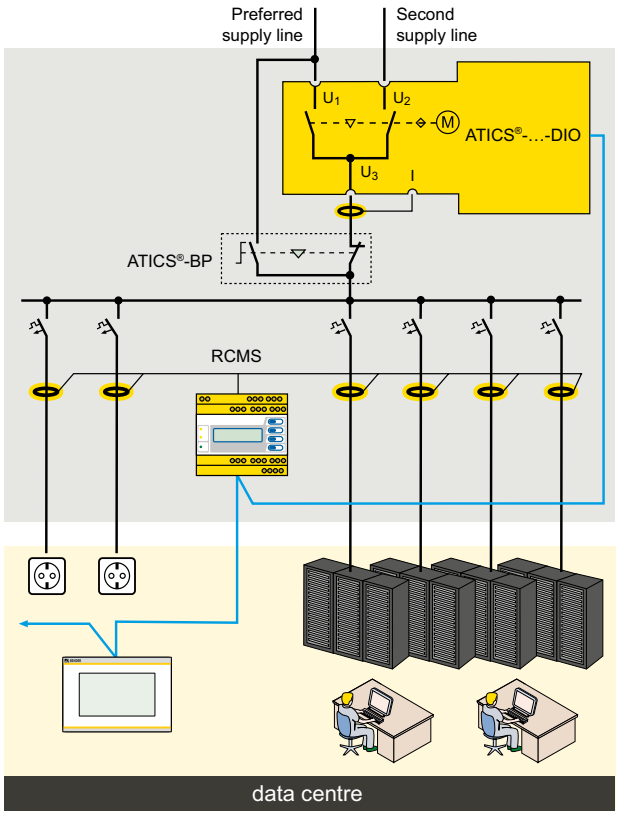

Example application data centre

- ATICS®-…-DIO: Changeover between the preferred and the redundant line
- MK2430/CP9xx: Alarm at at least two points for functional safety

Safety Analyser

For over 30 years, the “Bender Tester” has been a wellknown term for quality and long service life in the area of fully automated electrical safety testers. “UNIMET®” became the brand name.

UNIMET® – compact design – “Made in Germany”, the user-friendly one among the safety analysers.

Device overview UNIMET® test systems

					
		UNIMET® 300ST	**UNIMET® 400ST**	**UNIMET® 610ST**	**UNIMET® 810ST**
	Catalogue page	**436**	**439**	**443**	**446**
Application	**Electrical equipment**	✓	✓	✓	✓
	Electric hospital and care beds	✓	✓	–	✓
	Medical electrical equipment	✓[1]	✓	–	✓
	Electrical machines	–	–	✓	–
Voltages	**Supply voltage U_s**	AC 230 V	AC 230 V	AC 230 V	AC 100…120 V, AC 220…240 V
	Voltage measurement Measuring range	AC 90…264 V	AC 90…264 V	AC 90…264 V	AC 90…264 V
	Load current measurement	0.01…16 A	0.01…16 A	0.01…16 A	0.01…16 A
Test sequence	**manual**	✓	✓	✓	✓
	semi-automatic	–	–	✓	✓
	automatic	✓	✓	✓	✓
	Data exchange	UNIData300	UNIData300/400	UNIMET® 610ST Control Center	UNIMET® 810ST Control Center
	Product details (Products on www.bender.de/en)				

[1] Medical electrical equipment without patient connections

UNIMET® 300ST

Test system for electrical equipment and electric hospital and care beds

Device features

- Easy operation and handling
- Automatic and manual test procedure
- Data input via keyboard or barcode scanner
- Visual inspection, functional testing and electrical testing
- 600 data records can be stored
- Data exchange and storage via UNIData 300
- Compatible with common application programs such as visual FM, MT Data and Fundamed

Typical applications

- Safe tests of electrical equipment, hospital and healthcare beds as well as medical electrical equipment without patient connections.

Approvals

Standards

The UNIMET® 300ST series tests are carried out in accordance with the requirements of the device standards:

- IEC 62353
- DIN EN 62353 (VDE 0751-1)
- ÖVE/ÖNORM EN 62353
- DIN VDE 0701-0702
- ÖVE E8701-1

Further information

For further information refer to our product range on www.bender.de.

Ordering information

Type	Supply voltage U_s	Version	Art. No
UNIMET®300ST	AC 230 V	Standard	B96023000
UNIMET®300ST		CH	B96023001

Suitable system components

Description	Variant	Type	Art No.	Page
Adapter	German Schuko	VK701-6	B96020067	–
	Non-heating appliances	VK701-7	B96020066	–
	Adapter kit 16 A for DS32A	VK701-8	B96020097	–
Interface cable	–	RS-232/RS-232	B96012012	–
Test probe	–	Testprobe	B928748	–
Test terminal	–	Testterminal	B928741	–
Barcode scanner	–	PS/2	B96020082	–
Converter	–	USB1.1RS-232converter	B96020086	–
Flex keyboard	–	Flexkeyboard	B96020093	–
Three-phase adapter	–	DS32A	B96020098	**457**
		DS32A (CH/CH)	B96020110	**457**
		DS32DCT	B96020100	–

Technical data

Supply voltage	AC 230 V ±10 %)
Frequency range	45…65 Hz
Power consumption	max. 50 VA
Maximum load current	16 A
Max. connectable load at 230 V	3700 VA
Protection class	II
Ambient temperature	0…50 °C
Storage temperature	-10…+70 °C
Degree of protection	IP20

Testing of PE resistance

Test voltage	approx. 5 V, system frequency
Short-circuit current	> 2 A
Measuring range	0.001…29.999 Ω
Measuring accuracy	0.001…1.0 Ω: ±2.5 % of MV ±2 digits
	1.001…29.999 Ω: ±5 % of MV ±2 digits

Leakage current, differential measurement method

Measuring range	0.02…19.99 mA
Measuring accuracy	±5 % of MV ±5 digits

Leakage current, direct measurement

Measuring range	0,001…19,999 mA
Measuring accuracy	0,001…19,999 mA: ±5 % of MV ±2 digits

Equipment leakage current -Alternative method

Measuring range	0.001…19.999 mA
Measuring accuracy	0,001…9,999 mA: ±5 % of MV ±2 digits
	10,000…19,999 mA: ±7 % of MV ±2 digits
Test voltage (Equipment leakage current measurement – alternative method)	
	approx. system voltage, system frequency
Test current	max. 3.5 mA

Insulation resistance

Test voltage	approx. DC 500 V
Max. test current	2.5 mA
Measuring range	0.01…199.99 MΩ
Measuring accuracy	0.01…99.99 MΩ: ±5 % of MV ±2 digits
	100.00…199.99 MΩ: ±10 % of MV ±2 digits

Load current measurement

Measuring range	0.01 A to 16 A
Measuring accuracy	±2.5 % of MV, ±3 digits

Voltage measurement

Measuring range	90…264 V
Measuring accuracy	±2.5 % of MV, ±2 digits

Apparent power

Measuring range	5…3700 VA
Measuring accuracy	±5 % of MV, ±5 digits

Other

Dimensions (without bag)	ca. 168 x 272 x 124 mm (W x D x H)
Weight (without accessories or bag)	approx. 2.2 kg
Calibration interval	36 months
Documentation number	D00135

of MV = of measured value

Dimension diagram (dimensions in mm)

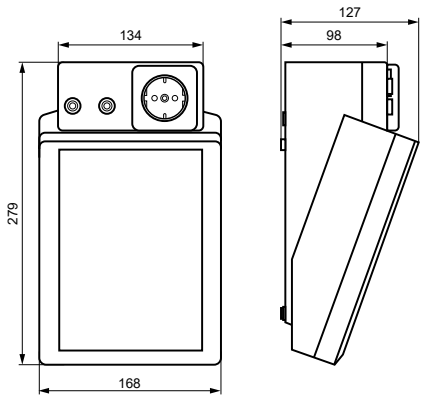

Displays and controls

1. Function buttons
2. Backlit LCD for displaying the user menu and the measurement results. Four lines of 20 characters each.
3. Permanently attached power cable for connection to the supply voltage.
4. Sockets
   - violet: Connection for test probe for testing exposed parts of the device under test.
   - yellow (E): for a second test lead when the low-resistance continuity of the PE conductor is to be measured between two points (e.g., on single-phase, permanently connected devices or extension cables).
5. Test socket: This is where the DUT's power supply cable is plugged in
6. Durable plastic enclosure, with pushbuttons for safe storage in the carrying bag.
7. Power switch with thermo-magnetic circuit breaker
8. Interfaces
   - 9-pole RS-232 interface, galvanically isolated, for connection to a personal computer
   - Centronics interface for connection to a printer
   - PS/2 port for connection to an external standard keyboard and a barcode reading wand or scanner.

Wiring diagrams

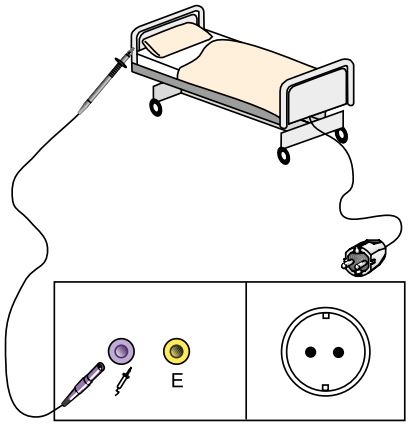

Connection of hospital and care beds and electrical equipment with plug-in connector.

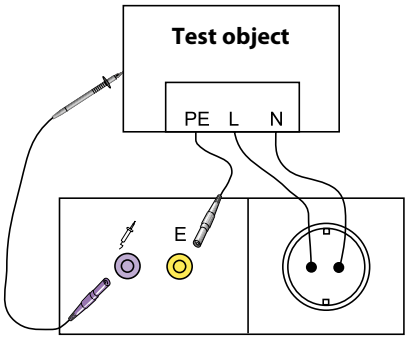

For connecting single-phase permanently installed equipment to the test system
- Disconnect the device
- Disconnect the connection to the supply voltage

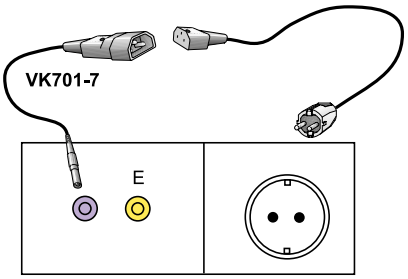

Testing of extension cables
- Connection of connecting and extension cords

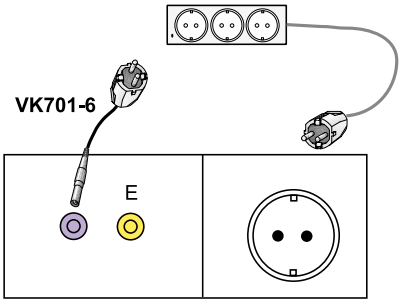

Testing of extension cables
- Connection of connecting and extension cords

UNIMET® 400ST

Test system for medical electrical equipment, electrical hospital and care beds and electrical equipment

Typical applications

- Safe testing of medical electrical equipment with patient connections, hospital and care beds and electrical equipment.

Approvals

Device features

- Easy operation and handling
- Automatic and manual test procedure
- Data input via keyboard or barcode scanner
- Visual inspection, functional testing and electrical testing
- 4mm socket for testing applied parts
- 600 data records can be stored
- Data exchange and storage via UNIData 300/400
- Compatible with common application programs such as visual FM, MT Data and Fundamed

Standards

The UNIMET® 400ST series carries out tests in accordance with the requirements of the device standards:

- IEC 62353
- DIN EN 62353 (VDE 0751-1)
- ÖVE/ÖNORM EN 62353
- DIN VDE 0701-0702
- ÖVE E8701-1

Further information

For further information refer to our product range on www.bender.de.

Ordering information

Type	Supply voltage U_S	Version	Art. No.
UNIMET®400ST	AC 230 V	Standard	B96024000
UNIMET®400ST		CH	B96024001

Suitable system components

Description	Variant	Type	Art. No.	Page
PatBox	–	PatBox	B96020096	–
Adapter	German Schuko	VK701-6	B96020067	–
	Non-heating appliances	VK701-7	B96020066	–
	Adapter kit 16 A for DS32A	VK701-8	B96020097	–
Interface cable	–	RS-232/RS-232	B96012012	–
Test probe	–	Testprobe	B928748	–
Test terminal	–	Testterminal	B928741	–
Barcode scanner	–	PS/2	B96020082	–
Converter	–	USB1.1RS-232converter	B96020086	–
Flex keyboard	–	Flexkeyboard	B96020093	–
Three-phase adapter	–	DS32A	B96020098	**457**
		DS32A (CH/CH)	B96020110	**457**
		DS32DCT	B96020100	–

Technical data

Supply voltage	AC 230 V ±10 %)
Frequency range	45…65 Hz
Power consumption	max. 50 VA
Maximum load current	16 A
Max. connectable load at 230 V	3700 VA
Protection class	II
Ambient temperature	0…50 °C
Storage temperature	-10…+70 °C
Degree of protection	IP20

Testing of PE resistance

Test voltage	approx. 5 V, system frequency
Short-circuit current	> 2 A
Measuring range	0.001…29.999 Ω
Measuring accuracy	0.001…1.0 Ω: ±2.5 % of MV ±2 digits
	1.001…29.999 Ω: ±5 % of MV ±2 digits

Leakage current, differential measuring method

Measuring range	0.02 mA…19.99 mA
Measuring accuracy	±5 % of MV ±5 digits

Leakage current, direct measurement

Measuring range	0.001…19.999 mA
Measuring accuracy	0.001…19.999 mA: ±5 % of MV ±2 digits

Equipment leakage current -alternative method

Measuring range	0,001…19,999 mA
Measuring accuracy	0,001…9,999 mA: ±5 % of MV ±2 digits
	10,000…19,999 mA: ±7 % of MV ±2 digits
Test voltage (Equipment leakage current measurement – alternative method)	
	approx. system voltage, system frequency
Test current	max. 3.5 mA

Insulation resistance

Test voltage	approx. DC 500 V
Max. test current	2.5 mA
Measuring range	0.01…199.99 MΩ
Measuring accuracy	0.01…99.99 MΩ: ±5 % of MV ±2 digits
	100.00…199.99 MΩ: ±10 % of MV ±2 digits

Load current measurement

Measuring range	0.01…16 A
Measuring accuracy	±2.5 % of MV, ±3 digits

Voltage measurement

Measuring range	90…264 V
Measuring accuracy	±2.5 % of MV, ±2 digits
Apparent power	
Measuring range	5…3700 VA
Measuring accuracy	±5 % of MV, ±5 digits

Other

Dimensions (without bag)	ca. 168 x 272 x 124 mm (W x D x H)
Weight (without accessories or bag)	approx. 2.2 kg
Calibration interval	36 months
Documentation number	D00136

of MV = of measured value

Dimension diagram (dimensions in mm)

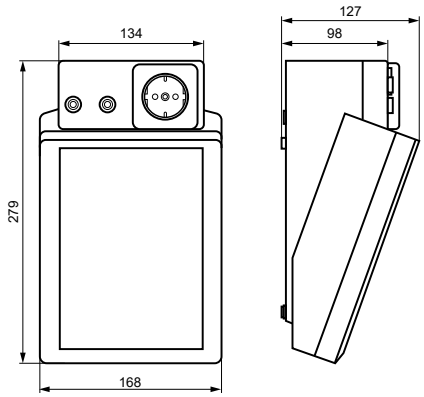

Displays and controls

1 Function buttons

2 Backlit LCD for displaying the user menu and the measurement results. Four lines of 20 characters each.

3 Permanently attached power cable for connection to the supply voltage.

4 Sockets
- black(AP): for testing applied parts
- violet: Connection for test probe for testing exposed parts of the device under test.
- yellow (E): for a second test lead when the low-resistance continuity of the PE conductor is to be measured between two points (e.g., on single-phase, permanently connected devices or extension cables).

5 Test socket: This is where the DUT's power supply cable is plugged in

6 Durable plastic enclosure, with pushbuttons for safe storage in the carrying bag.

7 Power switch with thermo-magnetic circuit breaker

8 Interfaces
- 9-pole RS-232 interface, galvanically isolated, for connection to a personal computer
- Centronics interface for connection to a printer
- PS/2 port for connection to an external standard keyboard and a barcode reading wand or scanner.

Wiring diagrams

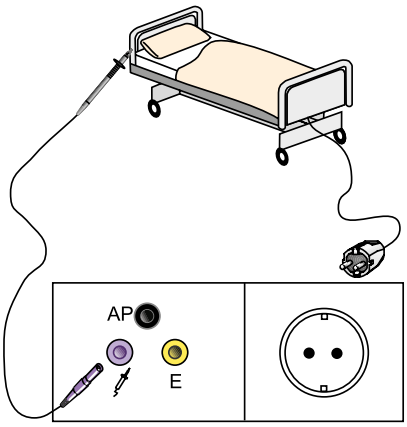

Connection of hospital and care beds and electrical equipment with plug-in connector.

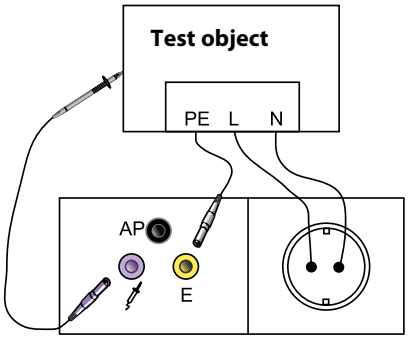

For connecting single-phase permanently installed equipment to the test system
- Disconnect the device
- Disconnect the connection to the supply voltage

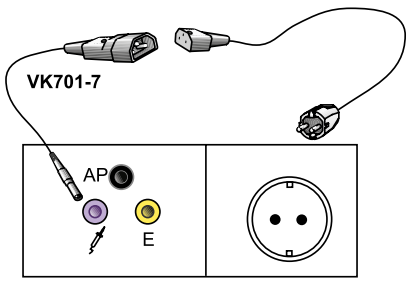

Testing of extension cables
– Connection of connecting and extension cords

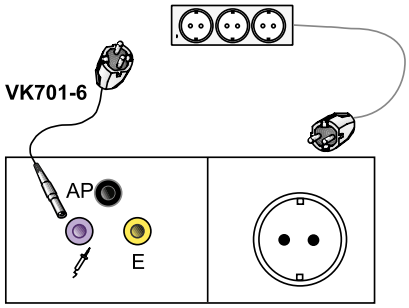

Testing of extension cables
– Connection of connecting and extension cords

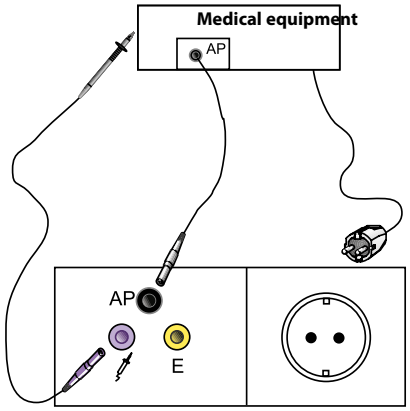

Connection of medical electrical equipment with plug-in connector

UNIMET® 610ST

Test system for electrical equipment and machines

Areas of application

- Electrical equipment "Inspection after repair, modification of electrical appliances – Periodic inspection on electrical appliances" acc. to DIN VDE 0701-0702 (VDE 0701-0702).
- DIN EN 60204-1/VDE 0113 Safety of machinery - Electrical equipment of machines - Part 1: General requirements

Certifications

Device features

- The Windows user interface provides an easy-to-use solution
- Data exchange and storage via Control Center
- Automatic, semi-automatic or manual test sequences
- Data input via touch screen, keyboard or barcode scanner
- Visual inspection, electrical safety and functional test user-definable
- Test sequences user-definable
- Data storage > 10,000 data records
- Filter function for fast data selection
- Management of test dates
- Multitenancy
- Catalogue systems
- Test probe with two switching contacts – for semi-automatic testing of parts not connected to PE
- Compatible with all common application programs

Standards

The UNIMET® 610ST series tests according to the device standards:

- DIN VDE 0701-0702
- DIN VDE 0113/ EN 60204-1
- ÖVE/ÖNORM E 8701-1

Further information

For further information, refer to our product area at www.bender.de.

Ordering details

Type	Nominal voltage range	Maximum output current	Version	Art. No.
UNIMET® 610ST	AC 100…120 V and AC 220…240 V	16 A	Standard (DE/DE)	B96026020

Suitable system components

Description	Variant	Type	Art. No.	Page
Adapter	Schuko	VK701-6	B96020067	–
	Non-heating devices	VK701-7	B96020066	–
	Adapter kit 16 A for DS32A	VK701-8	B96020097	**459**
Cable	For connecting the test system to a PC, 9-pin, female-female (null-modem cable)	RS-232/RS-232 interface cable	B96012012	–
	Measuring lead, 150 cm, 4-mm connector	Cable 150 cm	B928703	–
Test probe	TP800 active test probe (with switch)	TP800	B96020080	–
	Measuring lead, 3 m, with black test probe	–	B928748	–
Test terminal	Black	–	B928741	–
Touchscreen pen	–	Stylus pen	B928749	–
Barcode scanner	for UNIMET® 610ST (PS/2 port)	–	B96020082	–
Flex keyboard	for UNIMET® 610ST (USB port)	–	B96020093	–
Test kit	various adapters for connecting medical electrical equipment to test systems	PK3	B96020004	–
Three-phase adapter	for testing three-phase devices during operation	DS32A	B96020098	**457**

Technical data

Nominal voltage range	AC 100…120 V/±10 %, AC 220…240 V/±10 %
Frequency range	48…62 Hz
Power consumption	max. 100 VA
Maximum output current	see ordering details
Protection class	II

Testing of PE resistance

Measuring range	0.001… 29.999 Ω
Measuring current	max. AC 8 A
Measuring voltage	max. AC 8 V
Intrinsic uncertainty	0.001…1.000 Ω: ±2.5 % of MV ±5 digits 1.001…29.999 Ω: ±5 % of MV ±5 digits
Operating uncertainty	0.001…1.000 Ω: ±5 % of MV ±10 digits 1.001…29.999 Ω: ±7.5 % of MV ±10 digits

Insulation resistance

Measuring range	0.01…199.99 MΩ
Measuring voltage	max. DC 550 V
Measuring current	max. 2.5 mA
Intrinsic uncertainty	0.01…99.99 MΩ: ±5 % of MV ±2 digits 100.00…199.99 MΩ: ±10 % of MV ±2 digits
Operating uncertainty	0.01…99.99 MΩ: ±7.5 % of MV ±4 digits 100.00…199.99 MΩ: ±10 % of MV ±4 digits

Equipment leakage current - alternative method

Measuring range	0.001…19.999 mA
Measuring voltage	max. AC 250 V
Measuring current	max. 3 mA
Intrinsic uncertainty	±5 % of MV ±5 digits
Operating uncertainty	±7.5 % MV ±10 digits

Leakage current, residual current measuring method

Measuring range	0.02…19.99 mA
Intrinsic uncertainty	±5 % of MV ±2 digits
Operating uncertainty	±7.5 % of MV ±4 digits
Frequency response	40…100 kHz ±3 dB

Leakage current, direct measurement

Measuring range	0.001…19.999 mA
Intrinsic uncertainty	±5 % of MV ±2 digits
Operating uncertainty	±7.5 % of MV ±4 digits
Frequency response	up to 100 kHz ±3 dB

Voltage measurement

Measuring range	AC 90…264 V
Frequency range	48…62 Hz
Intrinsic uncertainty	±2.5 % of MV ±3 digits

Load current measurement

Measuring range	0.005…16 A
Frequency range	48…62 Hz
Intrinsic uncertainty	±2.5 % of MV ±3 digits

Apparent power

Measuring range	5…3600 VA
Frequency range	48…62 Hz
Intrinsic uncertainty	±5 % of MV ±3 digits

Environment/EMC

EMC	IEC 61326-1
Ambient temperature	0…+40 °C
Storage temperature	-10 …+70 °C
Relative humidity (up to 31 °C)	max. 80 %
Relative humidity (> 31…40 °C)	decreasing linearly, max. 50 % condensation must be avoided
Height AMSL	max. 2000 m

Other

Degree of protection	enclosure: IP40, connections: IP20 in acc. with DIN VDE 0470 Part 1/EN 60529
Dimensions (without bag)	approx. 300x277x126 mm (W x D x H)
Weight (without accessories or bag)	approx. 3.5 kg
Calibration interval	36 months
Documentation number	D00380

of MV = of measured value

Dimension diagram (dimensions in mm)

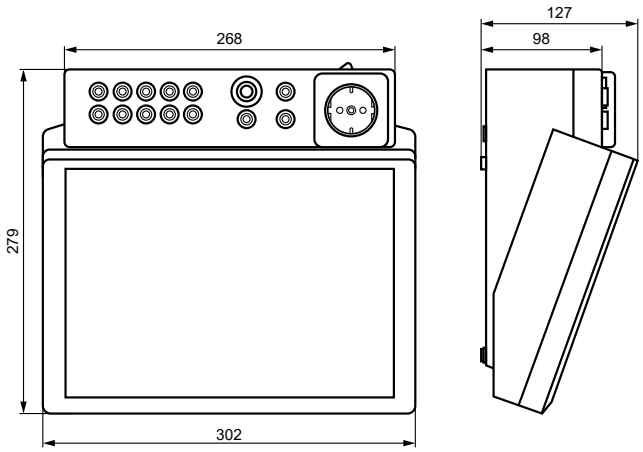

Operating elements

1. Touch screen for operation and display. For this purpose, a stylus is included in the scope of delivery.
2. Durable plastic enclosure, with push buttons for safe storage in the carrier bag.
3. 10 sockets (1…10) for the connection of VK adapters to test extension lines.
4. Measuring terminals
   - [B] (violet) for the connection of the single-pole test probe supplied with the product.
   - [A] for active test probe TP800 with push button (optional).
   - Socket [C] for equipotential bonding (e.g. connection for single-pole line extension with clip for the testing of permanently installed equipment).
   - Socket [D] for functional earth
5. Test socket: This is where the DUT's power supply cable is plugged in.
6. Connection to the supply voltage and power switch with thermo-magnetic circuit breaker.
7. Without function.
8. Interfaces:
   - PS/2 port for external keyboard
   - RS-485 serial interface for Bender Service
   - RS-232 interface, 9-pin, electrically isolated, for connection to a PC
   - USB interface for connection to a printer, a USB stick, an external keyboard or a barcode scanner (2 x host) and a PC (1 x device, for Bender Service only)
   - Ethernet network connection (optional)

Wiring diagram

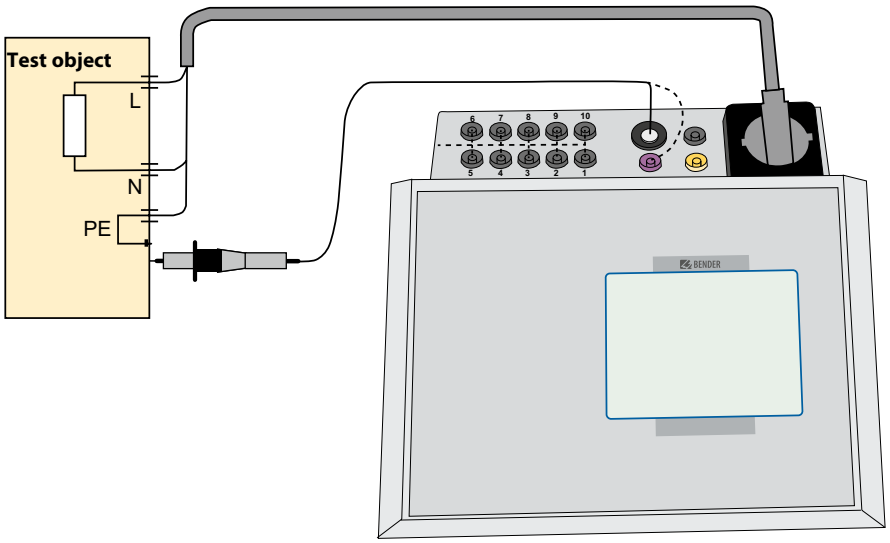

UNIMET® 810ST

Test system for medical electrical equipment

Typical applications

- Tests of medical electrical equipment in accordance with DIN EN 60601-1 3rd edition
- Recurrent tests of medical electrical equipment in accordance with DIN EN 62353 (VDE 0751-1).
- Electrical equipment "Prüfung nach Instandsetzung, Änderung elektrischer Geräte (Recurrent test and test after repair and modification of electrical equipment)" in accordance with DIN VDE 0701-0702 (VDE 0701-0702).

Approvals

CE UK CA

Device features

- Easy operation by Windows user interface
- Data exchange and storage via Control Center
- Automatic, semi-automatic or manual test sequence
- Data input via touch screen, keyboard or barcode scanner
- Visual inspection, electrical tests, functional tests, user-definable
- Test sequences user-definable
- Data memory > 10,000 data records
- Filter function for fast data selection
- Management of test dates
- Multitenancy
- Catalogue systems
- Test probe with two switching contacts –for semi-automatic testing of conductive parts not connected to PE
- Compatible with common application programs such as visual FM, MT Data and Fundamed

Standards

The UNIMET® 810ST series carries out tests in accordance with the requirements of the device standards:

- IEC 60601-1
- IEC 62353
- DIN EN 62353 (VDE 0751-1)
- IEC 61010-1
- ÖVE/ÖNORM EN 62353
- DIN VDE 0701-0702
- ÖVE E8701-1

Further information

For further information refer to our product range on www.bender.de.

Ordering information

Type	Nominal voltage range	Maximum load current	Version	Art. No.
UNIMET®810ST	AC 100…120 V and AC 220…240 V	16 A	Standard (DE/DE)	B96028020
UNIMET®810ST		13 A	GB/GB	B96028024
UNIMET®810ST			B/B	B96028027
UNIMET®810ST			US/US	B96028028
UNIMET®810ST		10 A	CH	B96028026

Suitable system components

Description	Variant	Type	Art No.	Page
Adapter	German Schuko	VK701-6	B96020067	–
	Non-heating appliances	VK701-7	B96020066	–
	Adapter kit 16 A for DS32A	VK701-8	B96020097	**459**
Cable	for connecting the test system with a PC, 9-pole, female-female (Null modem cable)	RS-232/RS-232interfacecable	B96012012	–
	Measuring lead, 150 cm, 4 mm connector	Cable150cm	B928703	–
Test probe	Test probe active (with switch)	TP800	B96020080	–
	3 m measuring lead with black test probe	–	B928748	–
Test terminal	black	–	B928741	–
Touchscreen pen	–	Styluspen	B928749	–
Barcode scanner	for the UNIMET® 810ST (PS/2 connection)	–	B96020082	–
Flex keyboard	for the UNIMET® 810ST (USB connection)	–	B96020093	–
Test kit	various adapters for connecting medical electrical equipment to test systems	PK3	B96020004	–
Test box	for testing test systems	TB3	B96020025	**460**
Three-phase adapter	for testing three-phase devices during operation	DS32A	B96020098	**457**
		DS32A (CH/CH)	B96020110	**457**
External power source 25 A	for standard-compliant protective earth resistance measurements (only in conjunction with UNIMET® 810ST)	EPS800	B96028050	**455**

Technical data

Nominal voltage range	AC 100…120 V/±10 %, AC 220…240 V/±10 %
Frequency range	48…62 Hz
Power consumption	max. 100 VA
Maximum output current	see ordering information
Protection class	SKII

Testing of PE resistance

Measuring range	0.001… 29.999 Ω
Measuring current	max. AC 8 A
Measuring voltage	max. AC 8 V
Intrinsic uncertainty	0.001…1.000 Ω: ±2.5 % v. M. ±5 digits 1.001…29.999 Ω: ±5 % v. M. ±5 digits
Operating uncertainty	0.001…1.000 Ω: ±5 % v. M. ±10 digits 1.001…29.999 Ω: ±7.5 % v. M. ±10 digits

Insulation resistance

Measuring range	0.01…199.99 MΩ
Measuring voltage	max. DC 550 V
Measuring current	max. 2.5 mA
Intrinsic uncertainty	0.01…99.99 MΩ: ±5 % v. M. ±2 digits 100.00…199.99 MΩ: ±10 % v. M. ±2 digits
Operating uncertainty	0.01…99.99 MΩ: ±7,5 % v. M. ±4 digits 100.00…199.99 MΩ: ±10 % v. M. ±4 digits

Equipment leakage current -alternative method

Measuring range	0.001…19.999 mA
Measuring voltage	max. AC 250 V
Measuring current	max. 3 mA
Intrinsic uncertainty	±5 % v. M. ±5 digits
Operating uncertainty	±7.5 % v. M. ±10 digits

Leakage current, differential measurement method

Measuring range	0.02…19.99 mA
Intrinsic uncertainty	±5 % v. M. ±2 digits
Operating uncertainty	±7.5 % v. M. ±4 digits
Frequency response	40…100 kHz ±3 dB

Leakage current, direct measurement

Measuring range	0.001…19.999 mA
Intrinsic uncertainty	±5 % v. M. ±2 digits
Operating uncertainty	±7.5 % v. M. ±4 digits
Frequency response	up to 100 kHz ±3 dB

Voltage measurement

Measuring range	AC 90…264 V
Frequency range	48…62 Hz
Intrinsic uncertainty	±2.5 % v. M. ±3 digits

Load current measurement

Measuring range	0.005…16 A
Frequency range	48…62 Hz
Intrinsic uncertainty	±2.5 % v. M. ±3 digits

Apparent power

Measuring range	5…3600 VA
Frequency range	48…62 Hz
Intrinsic uncertainty	±5 % v. M. ±3 digits

Environment/EMC

EMC	IEC 61326-1
Ambient temperature	0…+40 °C
Storage temperature	-10…+70 °C
Relative humidity (up to 31 °C)	max. 80 %
Relative humidity (> 31…40 °C)	decreasing linearily, max. 50 % condensation must be avoided
Height above sea level	max. 2000 m

Other

Degree of protection, enclosure: IP40, connections: IP20	
	according to DIN VDE 0470 Part 1/EN 60529
Dimensions (without bag)	approx. 300x277x126 mm (W x D x H)
Documentation number	D00008
Weight (without accessories or bag)	approx. 3.5 kg
Calibration interval	36 months
Documentation number	D00008

of MV = of measured value

Dimension diagram (dimensions in mm)

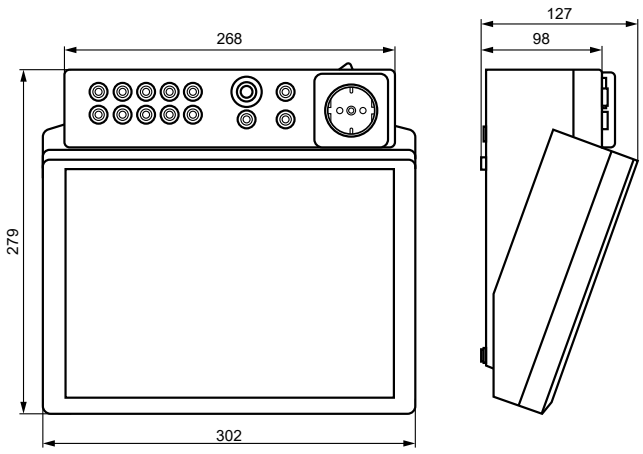

Displays and controls

1. Touchscreen for operator control and indication. For this purpose, a stylus is included in the scope of supply.
2. Durable plastic enclosure, with pushbuttons for safe storage in the carrying bag.
3. 10 sockets (1…10) for the connection of patient electrodes.
4. Measuring terminals
   - [B] (violet) for the connection of the single-pole test probe supplied with the product.
   - [A] for active test probe TP800 with pushbutton (option).
   - Socket [C] for equipotential bonding (e.g. connection for single-pole line extension with clip for the testing of permanently installed equipment).
   - socket [D] for functional earth
5. Test socket: This is where the DUT's power supply cable is plugged in.
6. Connection to the supply voltage and power switch with thermo-magnetic circuit breaker.
7. Connection for the external 25 A power source EPS800.

   Note: The plug clicks into place and is secured against being pulled out accidentally.

   The plug can only be removed after pushing the movable grip back.
8. Interfaces:
   - PS/2 connection for external keyboard
   - RS-485 serial interface for Bender Service
   - 9-pole RS-232 interface, galvanically isolated, for connection to a personal computer
   - USB interface for connection to a printer, a USB stick, an external keyboard or a barcode scanner (2 x host) and a PC (1 x device, for Bender Service only)
   - Ethernet network connection (optional)

Wiring diagram

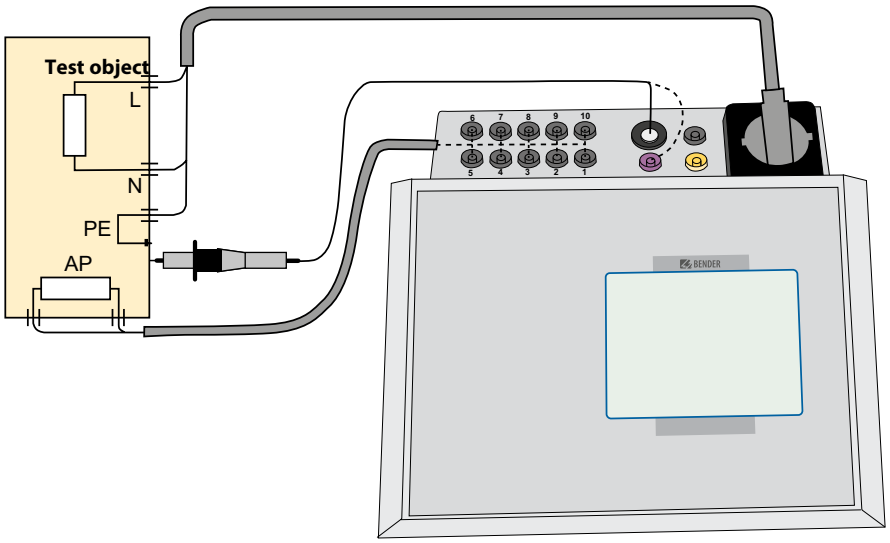

EPS800

External power source 25 A for UNIMET® 800/810ST

Device features

- To be used in conjunction with the appropriate UNIMET® 800/810ST

Standards

The EPS800 series carries out tests in compliance with the device standard:

- IEC 60601-1
- IEC 61010-1

Typical applications

- External 25 A power source for standard-compliant protective earth resistance measurement acc. to IEC 60601-1 and IEC 61010-1

Further information

For further information refer to our product range on www.bender.de.

Approvals

Ordering information

Type	Version	for UNIMET®		Art. No.
		800ST	810ST	
EPS800	Standard (German)	B96028010	B96028020	B96028050
EPS800	GB	B96028014	B96028024	B96028054
EPS800	CH	B96028016	B96028026	B96028056
EPS800	B	B96028017	B96028027	B96028057
EPS800	US	B96028018	B96028028	B96028058

Technical data

Nominal voltage	AC 207…253 V, 48 … 62 Hz
Power consumption	400 VA
Measuring current	AC 25 A ±10 % (0 … 0.3 Ω)
Output power	230 VA
Operating mode	continuous operation
Protection class	II
Micro-fuse	5 x 20 mm, fast 5 A/250 V

Other

EMC	IEC 61326-1
Ambient temperature	0…+40 °C
Storage temperature	-10…+70 °C
Relative humidity (up to 31 °C)	max. 80 %
Relative humidity (> 31…40 °C)	decreasing linearily, max. 50 % condensation must be avoided
Height above sea level	max. 2000 m
Degree of protection	IP20
Dimensions	ca. 244 x 164 x 120 mm (W x D x H)
Documentation number	D00146
Weight	≤ 4 kg

Dimension diagram (dimensions in mm)

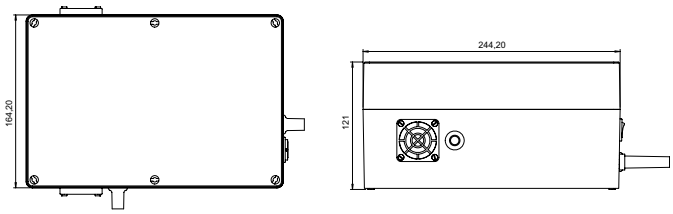

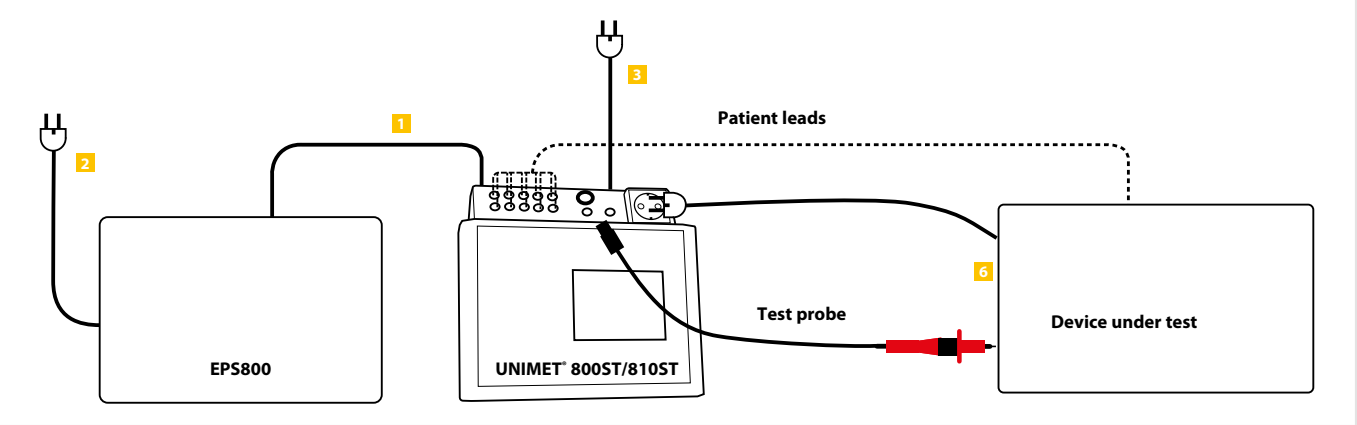

1. Insert the control cable of the EPS800 into the “EPS800” connector socket on the rear of the UNIMET® 800ST/810ST.

   Note: The plug clicks into place and is secured against being pulled out accidentally. The plug can only be removed after sliding back the movable handle piece.
2. Connect the supply line of the EPS800 to the power socket.
3. Connect the supply line of the UNIMET® 800ST/810ST to the power socket.
4. Switch on the power switch of the UNIMET® 800ST/810ST.
5. Switch on the power switch of the EPS800. The sound of the internal ventilator can be heard.
6. Connect the DUT. Determine the test sequence according to the classification.

DS32A

3AC three-phase adapter with differential current measurement

Device features

- To be used in conjunction with an UNIMET test system

Standards

The DS32A series carries out tests in compliance with the device standard:

- DIN VDE 0701-0702
- DIN EN 62353

Typical applications

- Three-phase adapter for testing medical electrical three-phase devices during operation

Further information

For further information refer to our product range on www.bender.de.

Approvals

Ordering information

Type	Art. No.
DS32A	B96020098
DS32A (CH/CH)	B96020110

Technical data

Electrical safety

Protection class	I acc. to IEC 61010-1/EN 601010-1/VDE 0411-1
Pollution degree	2
Measurement category	CAT II
Test voltage	1.69 kV
Current carrying capacity	32 A/6 h three-phase current
EMC	EN 61326-1

Differential current

Measuring range	AC 0.02…20 mA
Intrinsic uncertainty	5 % v. M. ±50 µA

Supply voltage

Supply voltage U_s	3AC 400 V ±10 %
Frequency range U_s	50…60 Hz
Power consumption	approx. 18 VA
Load current max.	32 A

Environmental conditions

Storage temperature	-10…+70 °C
Operating temperature	0…+50 °C
Degree of protection	IP20
Dimensions	405 x 210 x 200 mm (width x height x depth)
Weight	8.9 kg
Height above sea level	max. 2000 m
Operating mode	not suitable for continuous operation
Documentation number	D00147

Dimension diagram (dimensions in mm)

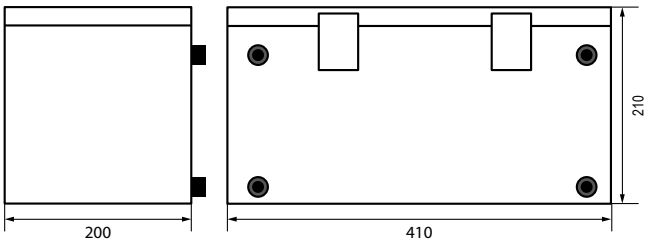

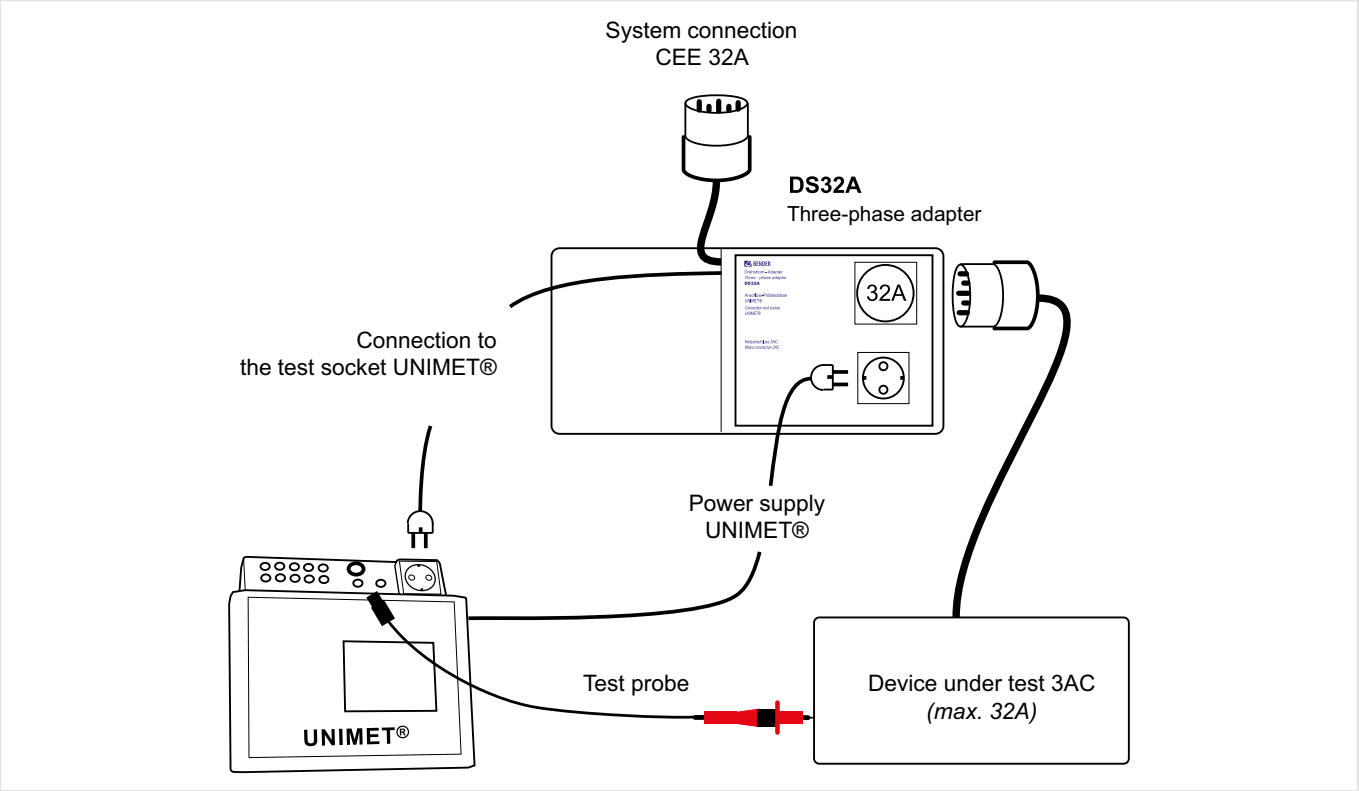
System connection
CEE 32A
DS32A
Three-phase adapter
32A
Connection to
the test socket UNIMET®
Power supply
UNIMET®
UNIMET®
Test probe
Device under test 3AC
(max. 32A)

VK701-8

Adapter kit 16 A for DS32A

Device features

- To be used in conjunction with the three-phase adapter DS32A

Further information

For further information refer to our product range on www.bender.de.

Typical applications

- for the measurement of 16-A-three-phase devices in conjunction with the three-phase adapter DS32A

Approvals

Ordering information

Type	Art. No.
VK701-8	B96020097

Technical data

Nominal voltage	
Nominal voltage	3AC 400 V
Max. current	16 A
Documentation number	D00172

Wiring diagram

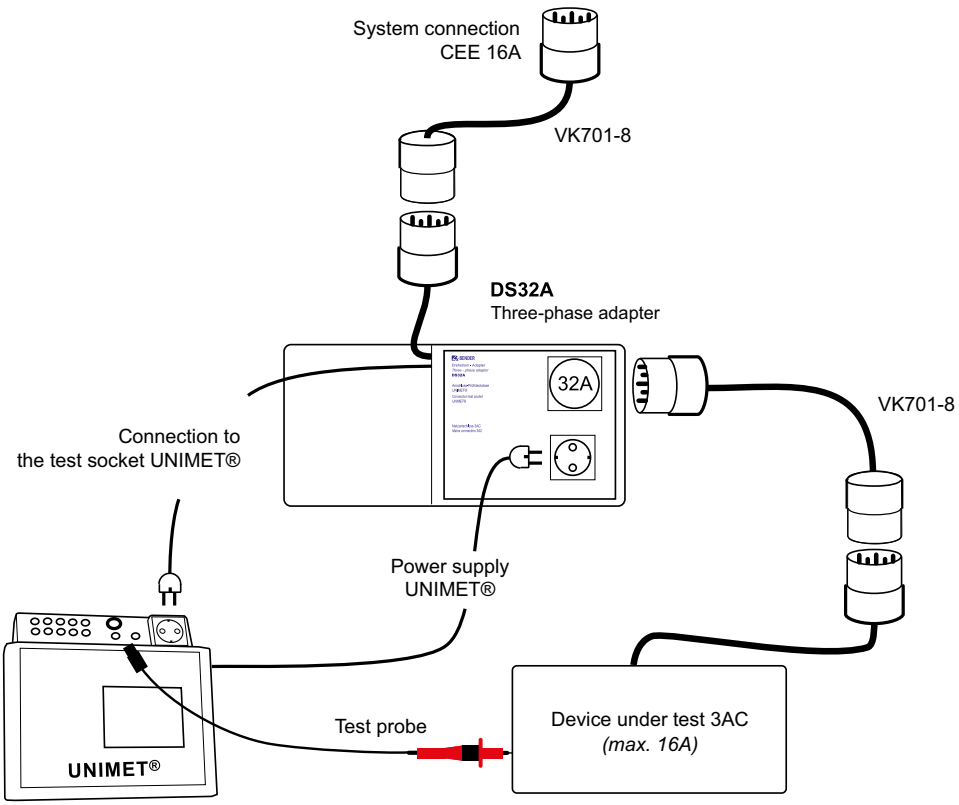

TB3
Test box

Device features

- Test box for UNIMET® 800/810ST
- Time and cost saving through simple handling
- Simulation of a standardised DUT
- 10 patient sockets for individual calibration
- Magnetic adhesive stripes allow simple fixing to the safety tester

Further information

For further information refer to our product range on www.bender.de.

Typical applications

- Testing the measured values of safety testers
- Comprehensive system self test

Approvals

Ordering information

Type	Version	Art. No.
TB3 test box	Standard (German)	B96020025

Technical data

Insulation coordination acc. to IEC 60664-1

Rated insulation voltage	AC 250 V
Rated impulse voltage/pollution degree	4 kV/3

Voltage ranges

Nominal system voltage U_n	100…240 V
Rated frequency fn	AC 48…62 Hz
Output voltage U12	7.39 V (±2.5 %)
Max. power consumption	35 VA at 50 Hz, 230 V

Evaluation of tolerance values

Precalculation	110 %
Tolerance	10 %
Built-in resistors	
R -MD (safety tester)	1000 Ω
R -PE	0.233 Ω
R3	25 000 Ω
R4	1 000 000 Ω
R5	1 500 000 Ω
R6	100 000 000 Ω
R7	1 000 000 Ω
R8	100 000 Ω
R9	130 000 Ω

Other

Ambient temperature (during operation)	0…+50 °C
Ambient temperature (during storage)	-10…+70 °C
Operating mode	continuous operation
Mounting	any position
Protection class	Class I
Dimensions in mm (H x W x D)	148 x 160 x 76
Weight	≤ 900 g
24-month calibration interval	
Documentation number	D00149

Dimension diagram (dimensions in mm)

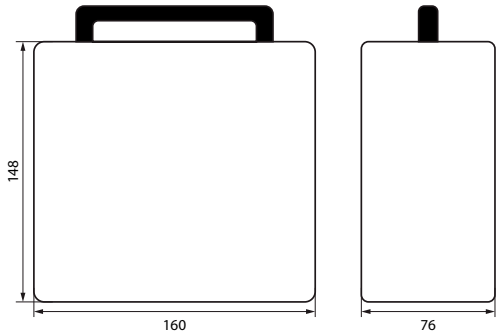

Displays and controls

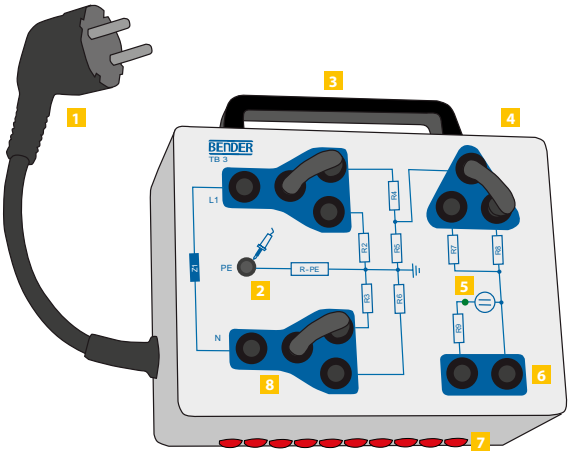

1 Mains plug; only to be used for the test socket of the safety tester

2 Socket for the connection of the test probe

3 Carrying handle

4 Enclosure, magnetic adhesive stripes allow simple fixing to the safety tester µP601

5 LED lights when voltage is applied at the mains plug

6 Sockets for the patient connections 1 and 2 of the safety tester

7 The sockets 1 and 2 at the side of the test box TB3 are internally connected to the sockets on the front. The sockets 3…10 can be used to test the patient connections 3…10 at the safety tester (patient auxiliary current measurement).The measured values differ from the values documented in the table “tolerance values”.

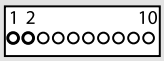

Sockets on the side

8 Jumpers allow simulation of different test situations

Connections

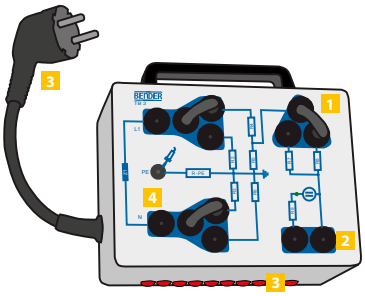

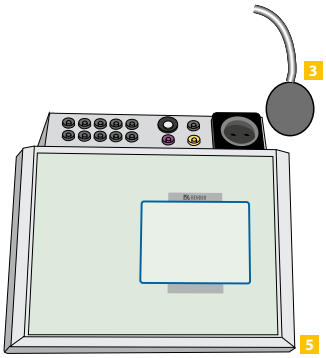

1 Jumpers. Insert the jumpers in such a way that the following sockets are connected:

UNIMET® 810ST
a-b
d-f
h-i

2 Connect the patient sockets 1 and 2 of the safety tester (at UNIMET® 810ST socket 2 only) to the respective socket of the test box TB3.

3 Insert the mains plug of TB3 into the test socket of the safety tester, as illustrated. Please observe the plug-in direction.

– at UNIMET® 810ST, insert the supply cable from the top

In case of wrong plug-in direction test results will become unusable.

4 Contact the test probe of the safety tester with the socket PE of TB3

5 UNIMET® 800/810ST test system

Technical terms

Alarm state	Alarm state indicates that the residual current in the installation monitored has exceeded the preset level of the RCM.
Direct contact	Electric contact of persons or animals with live parts.
Earth	Part of the Earth which is in electric contact with an earth electrode and the electric potential of which is not necessarily equal to zero.
Earth electrode	Conductive part or parts which is/are in good contact with earth and form an electrical connection with it.
Earth fault	Occurrence of an accidental conductive path between a live conductor and the Earth.
Earth fault current	Current flowing to earth due to an insulation fault.
Earth leakage current	Current flowing from the live parts of the installation to earth in the absence of an insulation fault.
Effect of the supply voltage	Effect influencing the functioning of measuring equipment and, consequently, the measured value produced by it.
Effects of the distribution system voltage	Effect influencing the operation and, consequently, the measured value produced by it.
Electric shock	Physiological effect resulting from an electric current through a human or animal body.
Equipment for insulation fault location	Device or combination of devices used for insulation fault location in IT systems. The insulation fault location system is used in addition to an insulation monitoring device. It injects a locating current between the electrical system and earth and locates insulation faults.
Equipotential bonding	Provision of electrical connections between conductive parts, intended to achieve equipotentiality.
Exposed-conductive part	Conductive part of equipment which can be touched and which is not normally live, but which can become live when basic insulation fails.
Extraneous conductive part	Conductive part not forming part of the electrical installation and liable to introduce an electric potential, generally the electric potential of a local earth.
Extraneous DC voltage U_{fg}	DC voltage occurring in AC systems between the AC conductors and earth (derived from DC parts).
Extraneous voltage	Voltage to which the measuring equipment can be subjected by external influences. This is not required for the operation of the measuring equipment, but can interfere with its operation.
Fault current I_Δ	Current which flows across a given point of fault resulting from an insulation fault.
Fault voltage (U_f)	Voltage appearing under fault conditions between exposed conductive and/or extraneous conductive parts and earth.
Fiducial value	A clearly specified value to which reference is made in order to define the fiducial error.
Indirect contact	Electric contact of persons or animals with exposed-conductive parts which have become live under fault conditions.
Influence quantity	A quantity which is not the subject of the measurement, but which influences the value of the measured quantity, or the indication of measuring equipment.
Insulation fault	A defect in the insulation of an equipment which can result either in an abnormal current through this insulation or in a disruptive discharge.
Insulation fault locator	Device or part of device for the location of the insulation fault.
Insulation monitoring device	Equipment which permanently monitors and indicate the insulation resistance of an electrical installation or a section of it in unearthed IT AC systems. The equipment is intended to signal a drop in insulation resistance below a minimum limit, so that the cause of the reduction can be found before a second fault occurs resulting in an unwanted disconnection of the electrical installation.
Insulation resistance R_F	Resistance in the system being monitored, including the resistance of all the connected appliances to earth.

Internal DC resistance R_i	Resistance of the insulation monitoring device between the terminals to the system being monitored and earth.
Internal impedance Z_i	Total impedance of the insulation monitoring device between the terminals to the system being monitored and earth, measured at the nominal frequency.
ISOMETER®	Registered trademark of Bender GmbH & Co. KG, Grünberg. An ISOMETER® actively measures the insulation resistance in IT systems with a measuring voltage which is superimposed between the system and the PE conductor.
Leakage current	Electric current in an unwanted conductive path under normal operating conditions.
Live part	Conductor or conductive part intended to be energised in normal operation, including a neutral conductor, but by convention not a PEN conductor or PEM conductor or PEL conductor.
Locating current I_L	r.m.s. value of the current that is injected by the locating current injector during the location process. The locating current can be generated by an independent locating voltage source, or an independent locating current source, or it can be driven directly from the system to be monitored.
Locating voltage U_L	r.m.s. value of the voltage present at the measuring terminals of the locating current injector during the measurement when the device has an independent locating voltage or current source.
Measuring current I_m	Maximum current that can flow between the system and earth, limited by the internal resistance from the measuring voltage source of the insulation monitoring device.
Measuring voltage U_m	Voltage present at the measuring terminals during the measurement.
Nominal current I_n	Current of the measuring equipment under nominal conditions.
Nominal frequency (f_n)	Frequency for which the measuring equipment is intended to be used and designed.
Nominal voltage of the distribution system (U_n)	Voltage by which a distribution system or equipment is designated and to which certain operating characteristics are referred.
Nominal voltage of the measuring equipment (U_{me})	Voltage for which the measuring equipment is intended to be used and the value of which is marked on the equipment.
Nominal voltage range	Voltage range for which the measuring and monitoring equipment is intended to be used and for which it has been designed.
Open-circuit voltage (U_q)	Voltage present across unloaded terminals on the measuring equipment.
Operating voltage in a system	The value of the voltage under normal conditions at a given, specific point of the system.
Origin (of the electrical installation)	Point at which electric energy is delivered to the electrical installation.
Output voltage (U_a)	Voltage across the measuring equipment terminals where this equipment does or can output electric power.
Performance characteristic	One of the quantities (described by values, tolerances, ranges) assigned to an equipment in order to define its performance.
Protective conductor PE	Conductor provided for purposes of safety for example protection against electric shock.
Puslating direct current	Current of pulsating waveform which assumes, in each period of the rated power frequency, the value 0 or the value not exceeding 0.006 A d.c. during one single interval of time, expressed in angular measure, of at least 150°.
Rated contact voltage	Voltage for which a relay contact is rated to open and close under specified conditions.
Rated operating conditions	A set of specified measuring ranges for performance characteristics and specified operating ranges for influence quantities, within which the variations of operating errors of an instrument are specified and determined.
Rated residual operating current $I_{\Delta n}$	The value of the residual operating current, assigned to the RCM by the manufacturer, at which the RCM shall operate under specified conditions.
RCM directionally discriminating	RCM used in IT systems, capable of directionally discriminating between supply side and load side residual currents.
RCM type A	RCM for which actuation is ensured for residual sinusoidal alternating currents and residual pulsating direct currents, whether suddenly applied or slowly rising.

RCM type B	RCM for which actuation is ensured for residual sinusoidal alternating currents, residual pulsating direct currents or smooth residual direct currents, whether suddenly applied or slowly rising.
Residual current I_Δ	Algebraic sum of the values of the electric currents in all live conductors, at the same time at a given point of an electric circuit in an electrical installation.
Residual current monitor	Device or association of devices which monitors the residual current in an electrical installation, and which activates an alarm when the residual current exceeds the operating value of the device.
Residual current monitoring system	Usually consists of the residual current monitor and measuring current transformers. The system localises occurring residual currents and indicates the location of the fault.
Residual operating current	Value of the residual current which causes the RCM to operate under specified conditions.
Response sensitivity	Value of the evaluating current or insulation resistance at which the evaluator responds under specified conditions.
Response time t_{an}	Time required by an insulation monitoring device to respond under specified conditions.
Response value R_a	Value of the insulation resistance at which the device responds under specified conditions.
Short circuit to exposed-conductive part	A conductive connection caused by a fault between the exposed-conductive part and the live parts of electrical equipment.
Short circuit current (I_k)	Current flowing across the short-circuited terminals of the measuring equipment.
Solid short circuit, short circuit to exposed-conductive parts, short circuit to earth	A solid short circuit, short circuit to exposed-conductive parts or short-circuit to earth exists if the impedance of the conductive connection at the point of fault is almost zero.
Specified operating range	Range of values of a single influence quantity which forms a part of the rated operating conditions.
Specified response value R_{an}	Value of the insulation resistance, permanently set or adjustable, on the device and monitored if the insulation resistance falls below this limit.
Supply voltage (U_s)	Voltage at a point where the measuring equipment does or can accept electric energy as a supply.
System leakage capacitance C_e	Total capacitance to earth of the system to be monitored, including any connected appliances, up to which value the insulation monitoring device can work as specified.
Total earthing resistance R_A	The resistance between the main earthing terminal and the earth.
Touch voltage (U_L)	Maximum value of the touch voltage which is permitted to be maintained indefinitely in specified conditions of external influences and is usually equal to AC 50 V, r.m.s. or 120 V ripple free DC.
Touch voltage U_t	Voltage between conductive parts when touched simultaneously by a person or an animal.
True value	The value which characterises a quantity perfectly defined, under the conditions which exist when the quantity is considered.
Variation	The difference between the indicated values for the same value of the measured quantity of an indicating or recording instrument, of the (conventional) true value of a supply instrument, when a single influence quantity assumes successively two different values.
Voltage against earth (U_o)	a) In distribution systems with an earthed neutral point, the voltage between a phase conductor and the earthed neutral point. b) In all other distribution systems, the voltage present between the remaining phase conductors and earth when one of the phase conductors is shorted to earth.

Short forms of residual current protective devices

Short form	German term	English term
MRCD	Gerät oder Anordnung von Geräten, das/die eine Strommesseinrichtung und eine Auswerteeinheit zur Erkennung und Bewertung sowie zur Ansteuerung des Kontaktöffnens einer Abschaltvorrichtung enthält.	device or an association of devices comprising a current sensing means and a processing device designed to detect and to evaluate the residual current and to control the opening of the contacts of a current breaking device
PRCD	ortsveränderliche FI-bzw. DI-Schutzeinrichtung (auch OVS)	portable residual current protective device
PRCD-S	OVS mit erweitertem Schutzumfang und Sicherstellung der bestimmungsgemäßen Nutzbarkeit des Schutzleiters	portable residual current protective device-safety
RCBO	FI-bzw. DI-Schutzeinrichtung mit eingebautem Überstromauslöser (FI/LS-bzw. DI/LS-Schalter)	residual-current-operated circuit breakers with integrated overcurrent protection
RCCB	FI-bzw. DI-Schutzeinrichtung ohne eingebauten Überstromschutz	residual-current-operated circuit breakers without integrated overcurrent protection
RCD (generic term)	Fehlerstrom-Schutzeinrichtung (RCD ohne Hilfsspannung, spannungsunabhängig) bzw. Differenzstrom-Schutzeinrichtung) (RCD mit Hilfsspannung, spannungsabhängig)	residual current protective device
RCM	Differenzstrom-Überwachungsgerät	residual current monitors
SRCD	ortsfeste FI-bzw-DI-Schutzeinrichtung in Steckdosenausführung	fixed socket-outlets residual current protective device

Alphabetical list of devices

	Type	Description	Catalogue page
	7204	MEASURING INSTRUMENT	388
	7220		388
	9604		388
	9620		388
AGE	AGE185	COUPLING DEVICE	158
AGH	AGH150W-4	COUPLING DEVICE	363
	AGH204S-4		365
	AGH520S		366
	AGH675S-7		367
	AGH675S-7MV		367
	AGH676S-4		369
AL	ALD1	ENERGY METER 1PH	280
	ALE3	ENERGY METER 3PH	280
AN	AN410	POWER SUPPLY UNITS	384
	AN450		386
ATICS	ATICS-…-DIO	SWITCHOVER AND MONITORING	430
	ATICS-…-ISO	MODULE	426
AWD	AWD3	ENERGY METER 3PH	280
CC	CC613	CHARGE CONTROLLER	254
CD	CD1000	COUPLING DEVICE	241
	CD1000-2		243
	CD5000		245
	CD14400		247
	CD25000		249
CMD	CMD420	CURRENT RELAY	319
	CMD421		319
CME	CME420	CURRENT RELAY	316
CMS	CMS460-D	LOAD CURRENT EVALUATOR	322
COM	COM463BC	CONDITION MONITOR	406
	COM465DP		398
	COM465ID		402
	COM465IP		394
CP	CP305	ALARM INDICATOR AND TEST COMBINATION	414
	CP907	CONTROL PANEL	411
	CP915		411
	CP924		411
	CP907-I	CONDITION MONITOR	408
	CP915-I		408
CTAC	CTAC series	MEASURING CURRENT TRANSFORMER	342
CTAS	CTAS series	MEASURING CURRENT TRANSFORMER	351

	Type	Description	Catalogue page
CTB	CTB31	WINDOW-TYPE CURRENT	277
	CTB41	TRANSFORMER	277
	CTB51		277
CTBC	CTBC17	MEASURING CURRENT TRANSFORMER	262
CTBS	CTBS25	MEASURING CURRENT TRANSFORMER	354
CTUB	CTUB100 series	MEASURING CURRENT TRANSFORMER	345
	CTUB103		235
DI	DI-1DL	INTERFACE REPEATER	389
	DI-2USB	INTERFACE CONVERTER	391
DPM	DPM2x16FP	DISPLAY MODULE	266
DS	DS0107	THREE-PHASE ISOLATING TRANSFORMER	376
	DS32A	THREE-PHASE ADAPTER	451
EDS	EDS150	INSULATION FAULT LOCATOR	147
	EDS151		147
	EDS30…		150
	EDS440		140
	EDS441		140
EPS	EPS800	EXTERNAL POWER SOURCE	449
ES	ES258	ENERGY BACKUP	295
	ES710	SINGLE-PHASE ISOLATING TRANSFORMER	371
ESL	ESL0107	OPERATING THEATRE LUMINAIRES TRANSFORMER	379
FP	FP200	DISPLAY AND OPERATOR UNIT	49
GM	GM420	LOOP MONITOR	325
IOM	IOM441	RELAY MODULE	392
IR	IR123P	INSULATION MONITORING DEVICE	104
	IR155-3203		123
	IR155-3204		123
	IR1575		71
	IR420-D4		58
	IR420-D6		98
	IR423		101
	IR425		61
	IR427		74
IRDH	IRDH275BM-7	INSULATION MONITORING DEVICE	51

Support during all stages

Comprehensive service for your installation: remote, by phone, on site

From planning to modernisation – Our extensive know-how is at your disposal during all project phases.

Furthermore, with our first-class service we guarantee maximum safety for your electrical installations.

We offer services ranging from support over telephone to repairs and on-site service – with modern measuring devices and competent employees.

Secure yourself:

- High availability of your installation thanks to fast reaction to fault messages
- Increased profitability of your capital expenditure (CapEx) via optimised maintenance processes
- Targeted operating expenditure (OpEx) due to less downtimes and shorter service visits
- Support for your prospective system monitoring and regular tests of your system/power quality/monitoring devices
- Automatic control, analysis, correction, new settings/updates
- Competent assistance with setting changes and updates

Bender Remote Assist

Bender Remote Assist offers you support via remote access, high-quality service and advice for your challenging task consisting in ensuring consistent high safety in your systems.

Many service visits, fault clearance but also analyses and controls can be carried out remotely – without the expenses of time and money that an on-site visit of a technician implies.

This fast, efficient help and advice by our expert network allows the highest possible availability of your system.

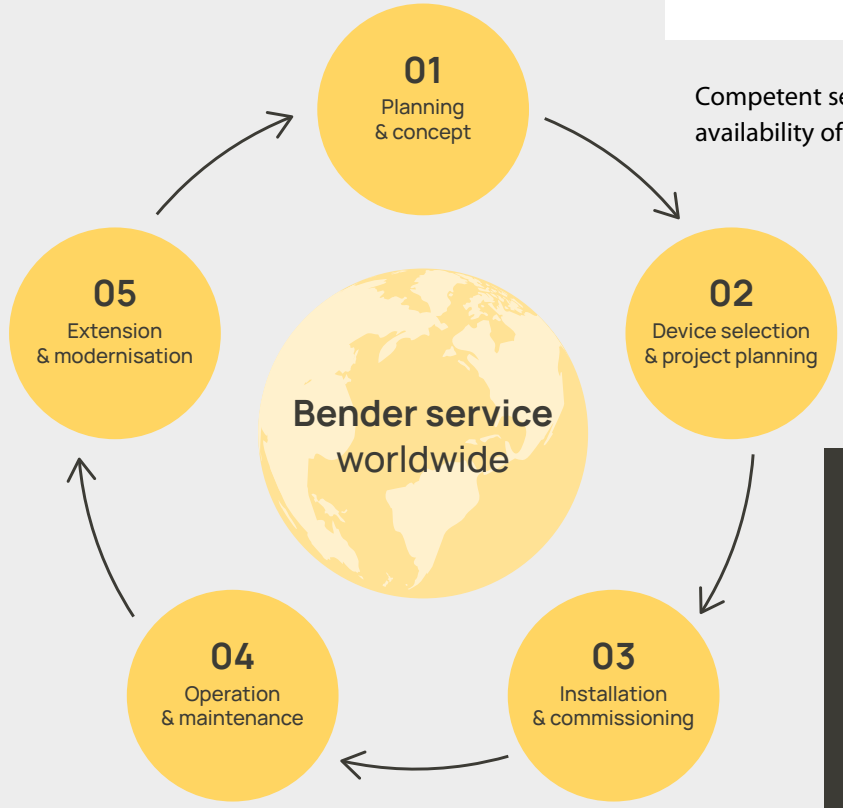

Competent service for maximum safety and high availability of your installation

Fault location – made easy

With portable fault location systems, existing insulation faults can be quickly located. They are the best alternative if no stationary equipment for insulation fault location is available.

bender.de

Bender GmbH & Co. KG

Londorfer Straße 65
35305 Grünberg
Germany

Tel.: +49 6401 807-0
info@bender.de
www.bender.de

BENDER